Final 3/87

INTER-TEL®
VOICE MAIL

SYSTEM ADMINISTRATION AND MAINTENANCE MANUAL

690.8011-0

INTER-TEL
6505 West Chandler Boulevard
Chandler, Arizona 85226
Phone (602) 961-9000

DISCLAIMER

This manual is provided by Inter-Tel. While reasonable efforts have been taken in the preparation of this material to insure its accuracy, the manufacturer makes no expressed or implied warranties of any kind with regard to the documentation provided herein. Further, Inter-Tel reserves the right to revise this publication and to make changes from time to time in the content hereof without obligation to notify any person or organization of such revision or changes.

TRADEMARKS

Inter-Tel Voice Mail System (R) is a registered trademark of Inter-Tel.

SYSTEM ADMINISTRATION AND MAINTENANCE MANUAL

Contents

CHAPTER I
INTRODUCTION TO VOICE MAIL

Contents I

INTRODUCTION

INTRODUCTION

A Note to the System Administrator

Congratulations! Your company now has the opportunity to enjoy reliable, effective and easy-to-use voice mail communications. Your Voice Mail System works with your telephone system to help manage the flow of information inside and outside your company or department. All any user needs is a standard DTMF tone-generating telephone.

This manual is written for you, to help you prepare the system for use, and to perform any of the activities which are reserved for you as System Administrator. A Summary Sheet and Worksheet are supplied in the next chapter to give you a quick reference guide to the System Administrator's functions.

Your Voice Mail System is easy to prepare for use. We recommend that you:

1. Read this section as an overview of what voice mail is and what the System Administrator does.

2. Use the worksheet provided to follow the instructions for step-by-step System Administration.

What is Voice Mail?

Voice mail makes the most of your telephone and office messaging systems. It takes messages for users, and then repeats them back, but only to the person(s) for whom they're intended. Messages are stored in "voice mailboxes" assigned to mailbox owners. Message privacy is guaranteed by the use of Personal Codes.

Confidential--Convenient

Voice mail resolves the problems of taking messages accurately and making sure they are delivered. Users who are not in the office can have their callers leave messages with the system, and they can call it at any time to listen to those messages, or to leave messages for others.

Easy-To-Use

Your Voice Mail System is designed to allow users to easily leave, receive, or transfer messages without any further training. It tells the user what to do to use all its features successfully, even on the first try. At each step, voice prompts tell the user what to do next.

INTRODUCTION

Who Can Use Voice Mail?

Users Without Mailboxes

Voice mail users without mailboxes can only leave messages for others. These users are automatically directed to leave messages when they call the system. After leaving a message, users may end the call by pressing nine. They may press zero to return to a live operator, if the telephone system allows this feature.

Mailbox Owners

Users assigned to the twenty-four mailboxes have access to all the system features, except those reserved for you as System Administrator. Mailbox owners can use all the options described in the Menu:

TO LEAVE A MESSAGE, PRESS ONE.

HEAR YOUR MESSAGES, PRESS TWO.

CHECK STATUS OF MESSAGES SENT, PRESS THREE.

PERSONAL SET UP, PRESS FOUR.

CHANGE CALLER I.D., PRESS EIGHT.

TO END CALL, PRESS NINE.

TO RETURN TO OPERATOR, PRESS ZERO (if available).

Expert User: The System Administrator

As you can see, voice mail works with different kinds of users. The System Administrator is a unique user, because this person is in charge. The System Administrator arranges to record the directory of voice mailboxes, and assigns them to owners. The Voice Mail System can't be used until the System Administrator puts it into operation.

Only the System Administrator has access to all the voice mail features. A Summary of all the Administrator's activities (p.48) and a Worksheet (p.11) for checking off various assignments are included in this manual.

INTRODUCTION

What Does a System Administrator Do?

The System Administrator sets up and manages the Voice Mail System. Performing administrative functions is very easy. The system provides voice prompts to help you do the job, and lets you know when each operation is complete.

The System Administrator:

- Prepares the system for operation with the user's telephone system.
- Sets Mailbox Number Length (if needed or desired).
- Enables the Return To Operator feature (if used).
- Sets the Clock.
- Prepares the System Greeting and Mailbox Directory.
- Assigns and enables Individual Mailboxes.
- Assigns Distribution List Mailboxes.
- Keeps track of system use and makes sure the system is working properly.
- Determines which optional features are available to users.
- Makes Mailbox and Message Waiting Indicator changes as needed.

CHAPTER II
SYSTEM ADMINISTRATION

Contents

Contents (cont)

SYSTEM ADMINISTRATOR ONLY

The functions discussed in this section are reserved for the System Administrator. To perform any of these activities, you must first call the Voice Mail System and select the option for System Administration. This option is only available to you, so it isn't even included in the Menu.

To begin any System Administration activities:

- Press [#] [5] .

If you have not already done so, you will be asked to enter your Mailbox Number and Personal Code. You must enter these numbers at least once before performing any of the [#] [5] options.

The system will confirm your status as System Administrator by telling you the time and date after you press [#] [5] and enter your Mailbox Number and Personal Code. The system is then ready to perform any of the following Administrator operations.

YOUR MAILBOX NUMBER AND PERSONAL CODE

The System Administrator's Mailbox Number and Personal Code are very special sets of numbers. These are the keys that unlock the Voice Mail System and put it to work.

The Administrator's Mailbox Number and Personal Code are used to activate the system, assign and enable mailboxes, prepare distribution lists, check on system operation, and perform all the other functions reserved for the System Administrator.

Your Mailbox Number identifies you, and your Personal Code ensures the security of the system. A pre-set Mailbox Number and Personal Code have been prepared for you, and should be used when you first access the system. You can change both sets of numbers.

Your Mailbox Number can be changed to the same numbers as your telephone extension, by following the instructions for Editing Individual Mailboxes on page 31. If you decide to change your Personal Code, simply follow the instructions for Changing A Personal Code in the User Guide.

The System Administrator's Mailbox Number is pre-determined. It's mailbox 10. The Personal Code for the System Administrator is pre-set: 1 2 3 4 5. Like all other Personal Codes which each user selects to guarantee mailbox privacy, the System Administrator's Personal Code can be changed in the PERSONAL SET UP option. However, if the Administrator forgets the changed Personal Code, it can be cleared using the instructions on the following page.

Note: You can also retrieve your Mailbox Number, if you forget it, by following the instructions for Clearing the Administrator's Personal Code, on page 10.

YOUR MAILBOX NUMBER AND PERSONAL CODE

What to do if You Forget Your Personal Code

- Go to the location of your system, and connect a telephone to the Terminal Port, if one is not already there and in use. Use this telephone to clear your code.

- Open the front cover of the unit by gently pulling the top of the cover away from the case and lifting it off. Open the door to the data cassette tape. Do not remove the tape until you have completed the next step.

- Press [#] [5] . You will be asked to:

  ENTER YOUR MAILBOX NUMBER.
  ENTER PERSONAL CODE.

- After hearing the prompt, remove the data cassette tape out of the tape transport and then put it securely back in place, exactly as it was.

- The red FAULT light on the front of the unit will come on when the tape is removed. When the tape is replaced, the FAULT light will go out and the amber IN USE light will come on as the tape begins rewinding. This process may take up to two minutes. When done, the IN USE light will go off and you will hear:

  MAILBOX (Number), followed by the Time and Date.

- The Administrator's Code is now erased.

- You can now perform any activities requiring your Personal Code. Before ending the call, you should change your code to a number you will remember, following the instructions in the User Guide.

Your Mailbox Number and Personal Code are needed every time you use the [#] [5] option for System Administration. Whatever set of numbers you decide upon for your code, you should select and remember them with care. The first time you access the system, you will use the pre-set Mailbox Number and Personal Code for the System Administrator. If you choose to change your Mailbox Number and/or Personal Code, you will then have to use your personally-defined set of numbers.

PUTTING THE VOICE MAIL SYSTEM TO WORK

System Administrator Worksheet

Use this worksheet to quickly and easily prepare your Voice Mail System for operation. As you review the System Administrator activities in this manual, record the actions needed on this worksheet (circle or fill in the blank). Then when you are ready to set the voice mail system for operation, simply follow this outline. Refer to the appropriate page number listed when you need additional information. Update the worksheet whenever changes are made to the system.

- To set the Voice Mail System, press the numbers and characters on your telephone key pad.
- Voice Prompts can be interrupted at any time.
- If the pre-set (default) value is desired, no action is necessary.

To perform any of these activities:

- Access the Voice Mail System.
- Press [#] [5] .
- Enter your Mailbox Number (1 0) and Personal Code (1 2 3 4 5). Your Mailbox Number and Personal Code must be entered only once during each voice mail session.
- Make sure the Voice Mail System has been properly installed and is ready for operation, then:

1. **Program the System to Work with the telephone system** (p.17). (If you have an Inter-Tel GX System, this action has been pre-set at the factory. If not, refer to the manual.) [#] [5] [5] [0]

System Administrator Worksheet (cont)

2. Set the System Clock (if change is needed) (p.18).

Set year	# 5 3 0
Set month	# 5 3 1
Set day	# 5 3 2
Set hour	# 5 3 3
Set minute	# 5 3 4
Set AM	# 5 3 5
Set PM	# 5 3 6

3. Set the Mailbox Number Length (p.23). (ALL MAILBOXES MUST BE DISABLED. The System Administrator's Mailbox Number will remain at 10 - pre-set, two-digit length, or change to 100 - three-digit length, or 1000 - four-digit length. A three-digit Mailbox Number length is recommended for the Inter-Tel GX System).

5 1 9

(2 , 3 , 4)

4. Edit your Mailbox Number (MB no.) and enable your MWI location (MWI no.) (p.31).

5 1 2

MB no. _____

MWI no. _____

5. Enable Individual Mailboxes (maximum 24) Message Waiting Indicator Locations (p.26).

5 1 0

Name	MB#	MWI	Name	MB#	MWI

System Administrator Worksheet (cont)

6. Enable Distribution List Mailboxes (maximum 6) (p.28). [#] [5] [2] [0]

DL# _____

Name MB#

DL# _____

Name MB#

DL# _____

Name MB#

DL# _____

Name MB#

PUTTING THE VOICE MAIL SYSTEM TO WORK

System Administrator Worksheet (cont)

DL# _____

Name MB#

DL# _____

Name MB#

7. Return To Operator (p.39).

Enter the type of telephone system used by the operator. (This action has been pre-set if the operator uses an Inter-Tel GX System. If not, refer to the manual.) [#] [5] [6] [3]

Enter operator extension number. (Wait seven seconds for confirmation.) [#] [5] [6] [0]

Ext. no. _____

Enable Return To Operator. [#] [5] [6] [1]

System Administrator Worksheet (cont)

8. Record the System Greeting (60 sec.) (p.21). [#] [5] [0] [0]

9. Record the Mailbox Directory (180 sec.) (p.22). [#] [5] [0] [2]

Name	MB#	Name	MB#

System Administrator Worksheet (cont)

Decide which of the following pre-set features are to be changed:

1. Delete Unreviewed Messages (p.42) (yes / no)

   If yes: mailbox owners can delete unheard tagged messages they have left for others (pre-set, no action needed). [#] [5] [7] [0]

   If no: mailbox owners cannot delete unheard tagged messages they have left for others. [#] [5] [7] [1]

2. On-line/Off-line Commands (p.43). (yes / no)

   If yes: mailbox owners can put the system On- and Off-line (pre-set, no action needed). [#] [5] [7] [2]

   If no: only the System Administrator is allowed to put the system On- and Off-line. [#] [5] [7] [3]

3. An Off-line system will not answer calls (pre-set, no action needed) (p.46). (yes / no)

   If no: Off-line System answers after X number of rings. [#] [5] [7] [4]

   Number of Rings _____ .

PUTTING THE VOICE MAIL SYSTEM TO WORK

Set the Voice Mail System to Work With the Telephone System

A new system has to be programmed to work with the telephone system to which it is connected. Once this is done, it will be able to perform all of its activities. Check with your installer or telecommunications manager to determine if this step has already been performed.

To Program the Voice Mail System to Work with Your Telephone System:

- Press [#] [5] [5] [0] If the system is behind Inter-Tel Systems, PABX or single CO lines.
- The system will confirm:

  OKAY.

- Press [#] [5] [5] [1] If the system is behind a KIU. Refer to the KIU Manual for additional information.
- The system will confirm:

  OKAY.

- Press [#] [5] [5] [2] If the system is behind an RIU. Refer to the RIU Manual for additional information.
- The system will confirm:

  OKAY.

Note: Contact your telecommunications manager to determine the type of telephone system used in your company. The system is set at the factory to operate behind a PABX or single CO line. If this applies to your telephone system, you don't need to perform this operation.

PUTTING THE VOICE MAIL SYSTEM TO WORK

Set the Clock

Your system is equipped with a clock. It must be set to the correct time to accurately report the Time and Date when messages are left. When the system is first installed, or if you change from Standard to Daylight Time (or vice versa), you will have to set the system clock. The system has a battery to assist in accurately reporting the time, even in the event of a power failure.

Each portion of the time and date is entered separately, and always as two-digit numbers. For example, the system only needs to know that the year is 87, the 19 is supplied automatically. If the hour is 3 o'clock, this must be entered as 03.

The system will confirm each of these settings as they are entered by stating the corrected time and date. You can also go ahead and press each sequence of numbers one right after the other, and then wait when you have finished for the system to repeat the time and date back to you.

To Set the Year:

- Press [#] [5] [3] [0] .
- The system responds with:

  ENTER YEAR.
- Press the two numbers identifying the year.

To Set the Month:

- Press [#] [5] [3] [1] .
- The system requests:

  ENTER MONTH.
- Press the two numbers identifying the month. Remember to add a 0 to any single digit numbers.

Set the Clock (cont)

To Set the Day:

- Press [#] [5] [3] [2] .
- The system requests:

  ENTER DAY.
- Press the two numbers identifying the day.

To Set the Hour: (1 to 12, AM or PM is set below)

- Press [#] [5] [3] [3] .
- The system requests:

  ENTER HOUR.
- Press the two numbers identifying the hour.

To Set the Minute:

- Press [#] [5] [3] [4] .
- The system requests:

  ENTER MINUTE.
- Press the two numbers identifying the minute.

To Set the Time as AM:

- Press [#] [5] [3] [5] .

To Set the Time as PM:

- Press [#] [5] [3] [6] .

PUTTING THE VOICE MAIL SYSTEM TO WORK

The System Greeting

The System Greeting is an optional 60-second message which informs your callers when they reach your company via the Voice Mail System. You can also include some information about your mailbox directory and how to use the system. For example:

"Thank you for calling ABC Company. You have reached our Voice Mail System. To leave a message, press the desired voice mailbox number on your Touch-Tone telephone. Press star to hear a directory of our mailboxes. Once you know the number you want, you can enter it right away. When your message is finished, press four to confirm delivery. If you need help at any time, simply press star."

If you do not use the full 60 seconds provided for the System Greeting, the system will adjust the space so your callers do not hear a stretch of silence at the end of the greeting. The 60-second limit is the maximum length, however, and cannot be increased.

It is not necessary to record a System Greeting, but it will prepare your callers for using voice mail. If you do not record a System Greeting, callers will hear:

ENTER MAILBOX NUMBER.
FOR DIRECTORY, PRESS STAR.

The System Greeting (cont)

To Record the System Greeting:

- Press [#] [5] [0] [0] . You will hear:

  AT THE TONE, BEGIN THE MESSAGE.
  WHEN DONE, PRESS FOUR.

- After you have recorded the System Greeting, wait at least three seconds. Then press four and hang up.

- Once the Greeting is recorded, you hear:

  TO RE-RECORD LAST MESSAGE, PRESS ONE.
  REPLAY, PRESS TWO.
  FOR MENU, PRESS POUND.
  TO END CALL, PRESS NINE.

- At this point you can press [2] to listen to your Greeting, or press [1] to re-record it.

To Delete the System Greeting:

- Press [#] [5] [0] [1] .
- This will be confirmed by:

  DELETED.

The Mailbox Directory

The Mailbox Directory gives your callers a listing of all your company's assigned mailbox owners. The space reserved for the Mailbox Directory is 180 seconds. As with the System Greeting, the system will adjust the available space so callers don't hear a lengthy silence at the end. If you do not prepare a Mailbox Directory, your callers will only be prompted to:

ENTER MAILBOX NUMBER.

If no Directory has been recorded, when your callers press [*] they will hear: NO DIRECTORY.

To Record the Mailbox Directory:

- Press [#] [5] [0] [2]. You will hear:

  AT THE TONE, BEGIN THE MESSAGE.
  WHEN DONE, PRESS FOUR.

- After recording the Directory, always wait three seconds before you press four or hang up.

- Once the Directory is recorded, you hear the following:

  TO RE-RECORD LAST MESSAGE, PRESS ONE.
  REPLAY, PRESS TWO.
  FOR MENU, PRESS POUND.
  TO END CALL, PRESS NINE.

When changes are necessary, the Mailbox Directory must be deleted and a new one recorded.

To Delete the Mailbox Directory:

- Press [#] [5] [0] [3]. This will be confirmed by:

  DELETED.

Set the Length of Mailbox Numbers

Each Individual and Distribution List Mailbox has a number, and the System Administrator can decide how these are numbered. Mailbox numbers can be 2, 3, or 4 digits in length. Once a mailbox length is established, all mailbox numbers must have the same number of digits.

Before setting the length of mailbox numbers, all the Individual and Distribution List mailboxes must be disabled. You may then select the desired mailbox length: 2, 3, or 4 digits. An easy way to number mailboxes is to make them the same as the mailbox owners' telephone extension numbers. The possible numbers are:

2 digit mailbox length: 00-99
3 digit mailbox length: 000-999
4 digit mailbox length: 0000-9999

After mailbox number length has been entered, the Mailbox Number for the System Administrator will be set at 10 for a two-digit mailbox length, 100 for a three-digit length, or 1000 for a four-digit length. To change your Mailbox Number, follow the instructions for Editing an Individual Mailbox on page 31.

To Set Mailbox Length:

- Press [#] [5] [1] [9] . The system will prompt:

  ENTER MAILBOX LENGTH.

- Enter the number (2, 3, or 4). The system will repeat the number.

Mailbox length is pre-set at two digits. The above steps only need to be performed if this number is to changed.

Note: This feature may not apply to RIU/KIU applications. For RIU/KIU applications, the mailbox number must match the telephone extension number.

Enable Individual Mailboxes and Message Waiting Indicator (MWI) Locations

Individual Mailboxes must be assigned and enabled by the System Administrator before they can be used by their owners. Anyone attempting to leave a message in a mailbox that has not been enabled will hear:

INVALID ENTRY.

Message Waiting Indicator (MWI) locations must also be assigned. These make it possible for mailbox owners to find out if they have new voice mail messages present. MWI locations are designated for internal telephones that are to have Message Waiting Indication (see User Guide).

MWI locations are two-digit numbers from 01-24. If an MWI location is not desired for a mailbox, enter 00. It is not necessary for each mailbox to have a corresponding MWI location.

To assign an MWI location to the corresponding mailbox, you must coordinate the following information with your installer:

1. Fill out the table of MWI locations provided, and give this information to your installer.

2. The installer can then complete the necessary connections, as described in the installation instructions.

3. Keep a copy of the MWI assignments for future reference, if any MWI changes need to be made.

This procedure assigns a physical MWI location to each telephone in the system. If alterations or additions to MWI locations are desired, the above procedure must again be followed. You may need to coordinate future changes with your telecommunications manager.

Note: In some RIU and/or telephone system applications where the telephone system's Message Waiting Lamps are being used, the MWI location must be set to 00 (refer to page 41 for detail).

Enable Individual Mailboxes and Message Waiting Indicator (MWI) Locations (cont)

Table 1. Message Waiting Indicator Locations

MWI LOCATION	WIRE COLOR	CONNECTOR PIN NUMBER	MAILBOX NUMBER	NAME
**	WH/BL, BL/WH	26, 1	******	**********
24	WH/OR, OR/WH	27, 2	_____	_____
23	WH/GR, GR/WH	28, 3	_____	_____
22	WH/BR, BR/WH	29, 4	_____	_____
21	WH/SL, SL/WH	30, 5	_____	_____
20	RD/BL, BL/RD	31, 6	_____	_____
19	RD/OR, OR/RD	32, 7	_____	_____
18	RD/GR, GR/RD	33, 8	_____	_____
17	RD/BR, BR/RD	34, 9	_____	_____
16	RD/SL, SL/RD	35, 10	_____	_____
15	BK/BL, BL/BK	36, 11	_____	_____
14	BK/OR, OR/BK	37, 12	_____	_____
13	BK/GR, GR/BK	38, 13	_____	_____
12	BK/BR, BR/BK	39, 14	_____	_____
11	BK/SL, SL/BK	40, 15	_____	_____
10	YL/BL, BL/YL	41, 16	_____	_____
09	YL/OR, OR/YL	42, 17	_____	_____
08	YL/GR, GR/YL	43, 18	_____	_____
07	YL/BR, BR/YL	44, 19	_____	_____
06	YL/SL, SL/YL	45, 20	_____	_____
05	VL/BL, BL/VL	46, 21	_____	_____
04	VL/OR, OR/VL	47, 22	_____	_____
03	VL/GR, GR/VL	48, 23	_____	_____
02	VL/BR, BR/VL	49, 24	_____	_____
01	VL/SL, SL/VL	50, 25	_____	_____

Enable Individual Mailboxes and Message Waiting Indicator (MWI) Locations (cont)

To Enable Each Mailbox and MWI Location:

- Press [#] [5] [1] [0]. You will be asked to:

  ENTER MAILBOX NUMBER.

- Enter the Mailbox Number. The system will confirm this with:

  MAILBOX (followed by the number). The system will state mailbox numbers in single-digit form. For example: the system will confirm Mailbox Number 21 as: "Mailbox two, one."

- The system will prompt:

  ENTER MWI LOCATION.

- Enter the MWI location number. The system will confirm with:

  MWI LOCATION (NUMBER).

- The system will repeat the request:

  ENTER MAILBOX NUMBER.
  ENTER MWI LOCATION.

- You can repeat this process until all assigned mailboxes and MWI locations are enabled.

- After all mailboxes and MWI locations have been entered, wait 4 seconds. The system will prompt:

  FOR MENU, PRESS POUND.
  TO END CALL, PRESS NINE.

Note: For RIU/KIU applications, the mailbox number must match the telephone extension number. For employees who don't have an extension number, assign a mailbox number of your choice, but make sure the number of digits is appropriate.

Enable Individual Mailboxes and Message Waiting Indicator (MWI) Locations (cont)

Note:

- If an MWI location is not desired, enter 00. The system will confirm: **MWI LOCATION: NONE**. In some RIU and/or telephone system applications where the telephone system's Message Waiting Lamps are being used, the MWI location must be set to 00 (refer to page 41).
- If you try to enter more than 24 mailboxes, the system will prompt: **SYSTEM FULL**.
- If you try to enable the same mailbox to more than one person, the system will prompt: **MAILBOX OCCUPIED**.
- If you try to assign the same MWI location to more than one person, the system will prompt: **MWI LOCATION OCCUPIED**.

To Delete an Individual Mailbox and MWI location:

- Press [#] [5] [1] [1] . You will be asked to:

  ENTER MAILBOX NUMBER.

- Enter the Mailbox Number. To make sure the number is not entered accidentally or unintentionally, the system will request that you again enter the number of the mailbox to be deleted. You will hear:

  AGAIN.

- Enter the mailbox number a second time, and the system will confirm this with:

  DELETED.
  FOR MENU, PRESS POUND.
  TO END CALL, PRESS NINE.

Remember: When changes in mailbox assignments are made, you must re-record the Mailbox Directory to reflect the changes.

Distribution List Mailboxes

Create a Distribution List

Callers may leave a single message in a Distribution List Mailbox to be heard by all the members on that List. List members retrieve these messages from their Individual Mailboxes. The system has the capacity for six Distribution List Mailboxes. Up to 24 mailboxes can be assigned to each List.

After all the List members have heard and deleted the message, it will be deleted from the Distribution List Mailbox automatically. It is not possible to CHECK STATUS OF MESSAGES SENT or TRANSFER messages if they are left via a Distribution List Mailbox.

To Create a Distribution List:

- Press [#] [5] [2] [0]. You will be asked to:

  ENTER LIST NUMBER.

- Enter the **Distribution List** Mailbox number you have selected. This number must have the same number of digits as the Individual Mailboxes. You will then be asked to:

  ENTER MAILBOX NUMBER.

- Enter the numbers of the Individual Mailbox owners who are to be on that list. These can be entered one right after the other. The system will continue asking for a mailbox number until you:

- Press [#] or [*] or wait five seconds.

The system will then repeat the numbers of the Individual Mailboxes which you have included on that Distribution List.

Distribution Lists can include only Individual Mailboxes, and some mailboxes may appear on more than one list. It is not possible to assign one Distribution List Mailbox to another Distribution List.

Note: If you try to assign the same Distribution List number to two different lists, the system will prompt:

LIST NUMBER OCCUPIED.

Delete a Distribution List

To change an entire Distribution List, or to eliminate it altogether, you can delete the List. Anyone attempting to leave a message in a deleted Distribution List Mailbox will hear:

INVALID ENTRY.

To Delete a Distribution List:

- Press [#] [5] [2] [1]. You will hear:

  ENTER LIST NUMBER.

- Enter the Distribution List number. The system will respond with:

  AGAIN.

- Press the number of the Distribution List again. You will then hear:

  DELETED.
  FOR MENU, PRESS POUND.
  TO END CALL, PRESS NINE.

Review a Distribution List

You can hear a quick summary of which Individual Mailboxes have been assigned to a given Distribution List. This is called Reviewing a List.

To Review a Distribution List:

- Press [#] [5] [2] [6]. You will be asked to:

  ENTER LIST NUMBER.

- Enter the number of the Distribution List you wish to Review. You will hear a listing of all the mailboxes assigned to that list, for example: "One-zero, one-one, one-seven, etc". This will be followed by:

  FOR MENU, PRESS POUND.
  TO END CALL, PRESS NINE.

Distribution List Mailboxes (cont)

Individual Mailbox Numbers can easily be added to, and removed from existing Distribution Lists. This is useful when new employees are assigned to mailboxes, or when changes in personnel make List changes necessary.

To Add a Mailbox to a List:

- Press [#] [5] [2] [4]. You will be asked to:

  ENTER LIST NUMBER.

- Enter the number of the Distribution List, and you will hear:

  ENTER MAILBOX NUMBER.

- Enter the number of the Individual Mailbox being added to the list.

- The system will indicate that the action is completed by stating:

  FOR MENU, PRESS POUND.
  TO END CALL, PRESS NINE.

To Remove a Mailbox from a List:

- Press [#] [5] [2] [5]. You will be asked to:

  ENTER LIST NUMBER.

- Enter the number of the Distribution List. You will then be asked to:

  ENTER MAILBOX NUMBER.

- Enter the Individual Mailbox number to be removed from the list. The system will confirm this number, and request:

  AGAIN.

- Enter the Individual Mailbox Number a second time. the system will confirm with:

  DELETED.
  FOR MENU, PRESS POUND.
  TO END CALL, PRESS NINE.

Edit Individual Mailboxes and Message Waiting Indicator (MWI) Locations

Changes within your organization may occasionally make it necessary to change a Mailbox Number and/or MWI location. The edit feature allows the System Administrator to change Mailbox Numbers, and MWI locations (if installed).

To Edit an Individual Mailbox Number:

- Press [#] [5] [1] [2].
- The system will prompt:

  ENTER MAILBOX NUMBER.

- Enter the digits currently used to identify the Mailbox. The system will confirm:

  MAILBOX (Number).

- The system will prompt:

  ENTER NEW MAILBOX NUMBER.

- Enter the digits chosen for the New Mailbox Number. If only the MWI location needs to be changed, simply enter the original Mailbox Number.
- The system will confirm the Mailbox Number, and then prompt:

  ENTER NEW MWI LOCATION.

- Enter the New MWI location. If only the Mailbox Number needed to be changed, enter the original MWI location.
- The system will confirm:

  MWI LOCATION (NUMBER).

- The system will indicate that the action is completed by stating:

  FOR MENU, PRESS POUND.
  TO END CALL, PRESS NINE.

Note: Remember, if MWI location changes are necessary, consult your telecommunications manager. Physical MWI location changes may need to be made in the equipment room.

Edit Distribution List Mailboxes

To Edit a Distribution List Mailbox:

- Press [#] [5] [2] [2] .
- The system will prompt:

  ENTER LIST NUMBER.

- Enter the current digits identifying the Distribution List. The system will confirm:

  LIST NUMBER (Number).

- The system will then prompt:

  ENTER NEW LIST NUMBER.

- Enter the new digits identifying the Distribution List. The system will confirm:

  LIST NUMBER (Number).

- The system will indicate that the action is completed by stating:

  FOR MENU, PRESS POUND.
  TO END CALL, PRESS NINE.

Remember: If necessary, re-record the Mailbox Directory after Editing Mailboxes.

Mailbox Summary for the System Administrator

Once Mailboxes have been assigned, you may need to check the number and type of messages that are being left in them. An Individual Mailbox Summary includes: the Mailbox Number, the MWI location number (if any), the number of New and Old messages contained in the mailbox, and the number of message cells consumed. This information will be reported as a listing of these items, one mailbox after the other, in ascending order.

The Mailbox Summary does not allow the System Administrator to listen to any of the messages described in the Summary. The system simply summarizes all active mailboxes in ascending order.

To Request an Individual Mailbox Summary:

- Press [#] [5] [1] [3].
- The system will respond with:

  MAILBOX (Number), MWI LOCATION (Number), NUMBER OF OLD AND NEW MESSAGES, AND NUMBER OF CELLS CONSUMED.

- The system will continue this process for each mailbox, in ascending order. After hearing the Mailbox Summary, you will hear:

  FOR MENU, PRESS POUND.
  TO END CALL, PRESS NINE.

  If there is no MWI location specified, the system will state:

  MWI LOCATION NONE.

Mailbox Summary for the System Administrator (cont)

A Distribution List Summary includes: the Distribution List Mailbox Number, the number of messages contained in that Distribution List Mailbox (will be reported as new), and the number of message cells consumed.

To Request a Distribution List Mailbox Summary:

- Press [#] [5] [2] [3] . You will hear the Distribution List Mailbox Summary:

  DISTRIBUTION LIST MAILBOX (Number), NUMBER OF MESSAGES (All Messages Reported As New), AND NUMBER OF CELLS CONSUMED.

- The system will state this information for each of the Distribution List Mailboxes, in ascending order. After hearing the Mailbox Summary, you will hear:

  FOR MENU, PRESS POUND.
  TO END CALL, PRESS NINE.

Change Message Cell Size

The Voice Mail System stores your messages in individual "message cells". These are pre-set to a length of 75 seconds each. We do not recommend that you change this cell length. If you decide to change the cell size, you will have to format the size of the message cells.

There are always the same number of message cells in the system. The size of these cells is programmed for all mailboxes, and cannot vary from one mailbox to the next.

When the pre-set cell length is changed, all message cells on the tape must be re-formatted. This is done automatically, but can take as long as 90 minutes to complete. If you must change cell length, or if you install a new tape, you should allow this amount of time before the Voice Mail System will be available for use. To avoid any inconvenience to users we recommend this procedure be done after business hours.

ONLY FORMAT MESSAGE CELLS WHEN BOTH THE VOICE MAIL SYSTEM AND THE DATA CASSETTE TAPE ARE AT ROOM TEMPERATURE.

When the message cell size is changed, all messages in the Individual Mailboxes and Distribution Lists will be erased. The System Greeting, Mailbox Directory, Personal Greetings and Time/Date clock will not be affected.

Note: If your system is already in operation and the mailbox owners have messages in their mailboxes, you should give them some advance warning whenever you change the size of message cells. This allows them to listen to their messages before the change occurs, so that no information is lost.

Change Message Cell Size (cont)

A useful way to inform the mailbox owners of the pending change is to leave a "Global" message for everyone. To do this, simply assign all the enabled Individual Mailboxes to a Distribution List, and leave a single message for all the mailbox owners. For example:

"Hello everyone. This is _____. I am going to change the size of the message cells this evening. Any messages in your mailboxes will be erased. Please check your messages before 5 PM today, so that you don't miss any information when this happens. Thank you."

To Change the Size of Message Cells:

- Make sure the system and the data cassette tape are at room temperature.
- Press [#] [5] [0] [8] .
- The system will prompt:

  ENTER CELL SIZE.

- Enter the new cell length as a two-digit number between 15 and 95. The number must end in a 5 or a 0. We recommend a cell length of 75 seconds.
- The system will confirm the number by repeating it, and then will begin to format the message cells.
- The process takes approximately 90 minutes. The amber IN USE light will stay on until completed.
- The system will generate a busy signal until formatting is completed.

Change the Data Cassette Tape

Occasionally it may be necessary to change the data cassette tape. The manufacturer recommends using only a Maxell M-90 Data Cassette tape to insure proper functioning of the Voice Mail System.

REMEMBER: TAPES SHOULD BE CHANGED AT ROOM TEMPERATURE.

To Change the Data Cassette Tape:

- Press [#] [5] [0] [9]. This informs the system that the tape is to be changed.
- Enter the desired cell size for the new tape. (A two-digit number between 15 and 95, in five-second increments.) We recommend a cell size of 75 seconds.
- After the new cell size number is repeated, the system will prompt:

  CHANGE TAPE NOW.

  Remove the old tape. The red FAULT light on the front of the unit will go on.
- Insert the new tape with Side A facing out. The FAULT light will go off for 1 1/2 minutes and the system will begin the formatting process.
- The amber IN USE light will stay on until formatting is completed. This may take up to 90 minutes.

A Reminder About Changing the Tape

As with changing the message cell size, mailbox owners should be informed when the tape is to be changed. The existing System Greeting, Mailbox Directory, Personal Mailbox Greetings will be gone.

After changing the tape, you may then re-record the System Greeting and Mailbox Directory to restore the system to full operation. A System-wide Distribution List message may be left for all mailbox owners to remind them to re-record their Personal Greetings.

Clear a Personal Code

If a mailbox owner forgets his/her Personal Code, the System Administrator must be contacted to clear the old Code so the mailbox owner can gain access to the mailbox.

To Clear a Personal Code:

- Press [#] [5] [1] [4] . The system will request:

  ENTER MAILBOX NUMBER.

- Enter the number of the mailbox to be cleared. The system will respond by repeating the Mailbox Number, and stating:

  FOR MENU, PRESS POUND.
  TO END CALL, PRESS NINE.

You can then alert the mailbox owner that his/her Personal Code has been cleared. No messages in the mailbox are erased in this process. The mailbox owner may then create a new Personal Code.

Enable and Disable Return To Operator

Voice mail users who have an electronic key telephone system with a receptionist, or a PABX operator, may use the RETURN TO OPERATOR feature. If used, this optional feature allows users to access voice mail and then RETURN TO a live OPERATOR at any time during the session.

You cannot enable the Return To Operator feature if the Voice Mail System is connected to the telephone system through the Terminal Port.

To enable this feature, contact your telecommunications manager for the following information:

1. Type of telephone system the operator uses. (Must have hookflash transfer capability).
2. Operator extension number. This is the number usually dialed to reach the Operator by inside callers.

To Set Return To Operator With an Inter-Tel System or PABX:

- Your Voice Mail System is pre-set at the factory for this option. If no change has been made, this step does not need to be followed.
- Press [#] [5] [6] [3] . The system will confirm:

  OKAY.

To Set Return To Operator with an Electronic Key Telephone System (EKTS):

- Make sure the system is installed with the necessary Integration Unit (RIU).
- Press [#] [5] [6] [4] . The system will confirm:

  OKAY.

Note: Return To Operator is not available with KIU applications.

Enable and Disable Return To Operator (cont)

To Enable RETURN TO OPERATOR:

- Press [#] [5] [6] [0] to enter Operator's extension number. The system will ask you to:

  ENTER DESIRED EXTENSION.

- Enter the Operator's extension number. Wait 7 seconds and the system will repeat the number.

- Press [#] [5] [6] [1] to enable RETURN TO OPERATOR. The system will confirm:

  ON.

  If you try to enable Return To Operator without first entering the operator's extension number, you will hear:

  INVALID ENTRY.

Note: If you attempt to set Return To Operator and it does not work, contact your telecommunications manager or equipment supplier to determine whether the hookflash length needs to be changed. RETURN TO OPERATOR requires a hookflash length for the telephone system of 600 milliseconds. If this does not fall between your telephone system's hookflash range, the Voice Mail System must be re-set.

To Re-set Hookflash Length:

- Press [#] [5] [6] [9] . The system will prompt:

  ENTER HOOKFLASH LENGTH.

- Press a number between 150 and 995. The system will confirm by repeating it.

To Disable RETURN TO OPERATOR:

- Press [#] [5] [6] [2] . The system will confirm:

  OFF.

These settings only need to be entered once. After the system has been given the appropriate information, the RETURN TO OPERATOR feature can be turned on and off simply by pressing [#] [5] [6] [1] to <u>enable</u>, and [#] [5] [6] [2] to <u>disable</u> this option.

Activate Message Waiting for Inter-Tel Systems

The Voice Mail System may utilize the Message Waiting Indication feature in your telephone system. Users can find out at a glance if they have any new messages via the message lamp on the telephone station set.

The Voice Mail System is pre-set at the factory to utilize the Message Waiting Indication feature in specific Inter-Tel electronic key telephone systems. If for any reason you need to re-set this feature, follow the procedure below:

To Program the Voice Mail System to Turn Message Waiting Indication On:

- Press [#] [5] [7] [8] .
- The system will prompt:

  ENTER SUFFIX.
- Enter the LEAVE MESSAGE Code. (system pre-set at 365). The system will confirm:

  (LEAVE MESSAGE CODE).

To Program the Voice Mail System to Turn Message Waiting Indication Off:

- Press [#] [5] [7] [9] .
- The system will prompt:

  ENTER SUFFIX.
- Enter the CANCEL MESSAGE Code. (system pre-set at 366). The system will prompt:

  (CANCEL MESSAGE CODE).

Note: <u>If you are using the telephone system's MWI capability, enter 00 when enabling MWI locations</u>. If you are using the Voice Mail System's MWI capability, enter the appropriate MWI location number. Contact your Telecommunications Manager to find out which Message Waiting capability you are using.

Delete Unreviewed Messages

The System Administrator determines whether mailbox owners will be allowed to delete unheard tagged messages they have left in the mailboxes of others. If allowed, mailbox owners may delete these tagged messages when they call to Check The Status of Messages They Have Sent:

The system is pre-set to allow such messages to be deleted. To disable this option, use the following instructions.

To prohibit deleting unreviewed messages:

- Press [#] [5] [7] [1] .
- The system will respond with:

  OFF.
  FOR MENU, PRESS POUND.
  TO END CALL, PRESS NINE.

To <u>allow</u> mailbox owners to delete tagged messages they have left:

- Press [#] [5] [7] [0] .
- The system will respond with:

  ON.
  FOR MENU, PRESS POUND.
  TO END CALL, PRESS NINE.

On-line/Off-line Commands

The system can be installed so outside calls are automatically answered by the Voice Mail System (On-line), or allowed to ring at individual telephones as if the system isn't there at all (Off-line). This is done by connecting the Central Office (CO) line to the Network Port on the voice mail unit, and connecting the station set to the Terminal Port (see installation instructions). On-line/Off-line commands only work when the system is accessed on the Terminal Port.

When the system is taken Off-line, inside callers can reach an outside line and hear a dial tone, even though they are connected through the Voice Mail System. Unless otherwise programmed, the system does not take messages in Off-line mode, and outside calls will ring through to the telephone station(s). Also, when the system is Off-line, the individual message waiting indicator lights will indicate busy until the system is returned to On-line status.

The System Administrator has the option of setting the system to "stand-by" to answer calls, even when it is Off-line (see Set Off-line System To Answer on page 46).

When the system is On-line, inside and outside callers will be directed automatically to the Voice Mail System.

Note: On-line/Off-line commands are not used with RIU/KIU applications.

To take the system Off-line:

- Press [#] [7] .
- Enter Your Mailbox Number and Personal Code. You will hear:

  PLEASE STAND BY.

- This will be followed by a dial tone, indicating that the Terminal Port on the unit is connected to the CO line.

On-line/Off-line Commands (cont)

To put the system On-line:

- Press [#] [#] when you hear the dial tone.
- You will then have access to the system and will hear the Menu.

The System Administrator determines whether mailbox owners are able to use the On-line/Off-line command, or if this is to be reserved for the Administrator only.

To allow all mailbox owners to take the system Off-line or return to On-line status:

- Press [#] [5] .
- Enter Your Mailbox Number and Personal Code.
- Press [7] [2] . The system will confirm:

  ON.

To reserve this option for the System Administrator only:

- Press [#] [5] .
- Enter Your Mailbox Number and Personal Code.
- Press [7] [3] . The system will confirm:

  OFF.

  The system is pre-set at the factory to allow this.

ADMINISTRATIVE OPTIONS

Temporary On-line

If the system is Off-line, and an inside user wants to put it back On-line long enough to leave a message in a voice mailbox:

- Listen for the dial tone, and then press [#] [#] . The Menu will be heard. The user can now perform all voice mail functions.
- When done using the system, press [#] [7] to take it Off-line. The system will request your Mailbox Number and Personal Code. After these have been entered, the system will state:

  PLEASE STAND BY.

- You will hear a dial tone, indicating the system is in Off-line status.

  After an inside user has answered the call, the outside caller can be transferred to the Voice Mail System by following the process below:

- Press [#] and the desired Mailbox Number. The inside user will hear a busy tone, and the outside caller will be connected to the Voice Mail System.
- The outside caller will be in Record mode and will hear the Mailbox Number and Personal Greeting (if any) followed by:

  AT THE TONE, BEGIN THE MESSAGE.
  WHEN DONE, PRESS FOUR.

- The caller will <u>not</u> hear the System Greeting.
- When the caller hangs up after leaving the message, the system will return to Off-line status.

Set Off-line System to Answer After X Number of Rings

Your Voice Mail System is set to not answer any calls when it is Off-line, but the System Administrator can tell it to go ahead and answer those calls after the telephone line rings a given number of times.

This is useful when the system is Off-line, but you want it to answer whenever you can't take a call. For example, if the system is set to ring 6 times, it will answer the call after 6 rings. This gives you the option of having the system "stand by" to take calls, even though it is Off-line.

This feature only works when the system is Off-line, and you must change the number of rings from the factory setting of 00. The zero setting means that an Off-line system will not answer any calls.

To Change the Number of Rings:

- Press [#] [5] [7] [4] . The system requests:

  ENTER RINGS.

- Enter a two-digit number between 00 (the default setting) and 99.

- The system will confirm:

  (Number of Rings).

- The new number of rings allowed before the system answers is now set for the number you entered. This will not necessarily be the same number of rings which a caller hears before the system answers.

System Cleaning and Maintenance

Occasionally it will be necessary for the System Administrator to clean the voice mail tape deck. The system will inform you of the need for cleaning or system maintenance by leaving a message in the System Administrator's mailbox stating:

CLEANING REQUIRED.

This message appears after the tape has played for 60 hours. Once received, this message will be repeated each time the Administrator listens to his/her messages, until the simple cleaning process is performed. Cleaning instructions are included in the System Cleaning and Maintenance Chapter.

After the tape transport has been cleaned, you must re-set the tape counter which keeps track of the amount of time since the last cleaning.

To Re-set the Tape Counter:

- Press [#] [5] [7] [5] .

This will inform the system that cleaning has been done, and the cleaning message will not be repeated for the next 60 hours of play.

- The system confirms that the counter is re-set with:

OFF.

The system will also inform the System Administrator when the number of messages stored is nearing the capacity of the system. The system will prompt:

SYSTEM EIGHTY PERCENT FULL.

When this message appears in the Aministrator's mailbox, the Administrator should do a Mailbox Summary (see page 33), and the system users should be given a message to delete all their Old messages.

SYSTEM ADMINISTRATOR ACTION SUMMARY

The following options are available to the System Administrator via the [#] [5] Menu selection. To perform these operations:

- Press [#] [5] .
- Enter Your Mailbox Number and Personal Code.

You are now identified to the system as the System Administrator. Once you hear the time and date reported, you may begin each of these activities by pressing [#] [5] :

Record the System Greeting:	0	0
Delete the System Greeting:	0	1
Record the Directory:	0	2
Delete the Directory:	0	3
Change Message Cell Size:	0	8
Change Tape:	0	9
Enable an Individual Mailbox And MWI Location:	1	0
Delete an Individual Mailbox:	1	1
Edit a Mailbox & MWI Location:	1	2
Mailbox Summary Report:	1	3
Clear a Personal Code:	1	4
Set Mailbox Number Length:	1	9
Create a Distribution List:	2	0
Delete a Distribution List:	2	1
Edit a Distribution List:	2	2
Distribution List Summary:	2	3
Add a Mailbox to a List:	2	4
Remove a Mailbox from a List:	2	5
Review a Distribution List:	2	6

SYSTEM ADMINISTRATOR ACTION SUMMARY

Set Clock, Year:	3	0
Set Clock, Month:	3	1
Set Clock, Day:	3	2
Set Clock, Hour:	3	3
Set Clock, Minute:	3	4
Set Clock, AM:	3	5
Set Clock, PM:	3	6
The System is behind PABX or CO:	5	0
The System is behind KIU:	5	1
The System is behind RIU:	5	2
Enter Operator Number:	6	0
Enable Return To Operator:	6	1
Disable Return To Operator:	6	2
Operator is behind PABX:	6	3
Operator is behind EKTS:	6	4
Change Hookflash Length:	6	9
Enable Check Status Message Delete:	7	0
Disable Check Status Message Delete:	7	1
On-line/Off-line Available to All:	7	2
On-line/Off-line, Available to Administrator Only:	7	3
Set Off-line Number of Rings:	7	4
Re-set Counter for Tape Cleaning:	7	5
Turn Message Waiting Indication On:	7	8
Turn Message Waiting Indication Off:	7	9

CHAPTER III
SYSTEM CLEANING AND MAINTENANCE

Contents III

GENERAL

There are no user-serviceable parts or adjustments within the Voice Mail System. To reduce risk of electrical shock, do not disassemble this instrument, but take it to an authorized service center when service or repair work is required.

Opening or removing covers may expose you to dangerous voltages or other risks. Incorrect re-assembly can cause electric shock when the instrument is used.

Maxell M-90 Data Cassette

1) Avoid dust collection. Use under dust-free conditions.

2) Avoid changes in temperature and humidity. Acceptable atmospheric conditions are 10° to 45° C (50° to 113° F) in temperature and 20% to 80% R.H. in humidity. Sudden changes in temperature or humidity during operation may have harmful effects.

3) If the unit or the cassette tape has been exposed to temperatures below 40° F (4° C), allow it to stabilize at room temperature for one hour before applying power.

4) Avoid touching the tape surface.

5) Make sure the data cassette is operating with Side A facing out.

6) Insert the data cassette firmly into the tape transport before using.

7) Keep the tape transport clean. After the deck has been used for a period of time, dust and contaminates can build up on the tape heads and cause damage.

   Tape heads, capstan, pinch-rollers and all other tape contact surfaces must be cleaned regularly. The Voice Mail System will provide the System Administrator with a "CLEANING REQUIRED" message after every sixty hours of play.

Consult the following maintenance instructions to keep your Voice Mail System working in top condition.

CLEANING THE TAPE DECK

The heads, capstan, and pinch roller of a cassette deck are parts easily contaminated by dirt, dust, and oil during tape travel. Dirty heads in particular cause poor tape-to-head contact, resulting in poor sound quality and fluctuations in tape speed.

To clean all parts the tape contacts:

1. Remove the cassette. Head cleaning tapes are not recommended as they use abrasive material and may cause damage to the heads.

2. Moisten an ordinary hygienic cotton-tipped applicator (swab) with a brand-name head cleaning solution or Isopropyl alcohol (Rx-type -- Do not use alcohol types with additives, such as rubbing alcohol.)

   Warning

   Do not use acetone or chlorinated or aromatic hydrocarbons (gasoline). They will attack plastic parts and adhesives in the product.

3. Gently wipe the pinch roller and capstan with the cleaning stick, and wipe the top surface of the magnetic heads (see Figure 1), taking care not to scratch the heads. Repeat this process until all discoloration and tape oxides are removed.

4. Remove any excess solution immediately.

5. Allow the solution to dry thoroughly and remove any residue before inserting the cassette tape.

6. Re-insert the tape with Side A facing out. The tape will re-center, and the Voice Mail System will be ready for use. The System Administrator can then re-set the tape cleaning counter (see page 47).

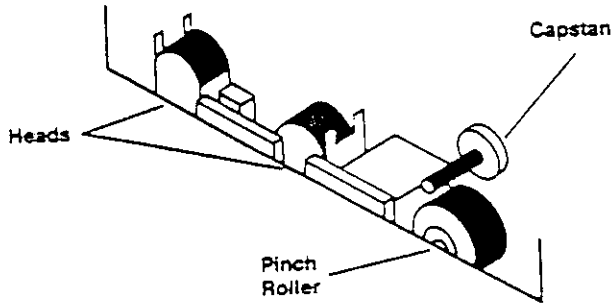

Figure 1. Cleaning the Tape Transport

Demagnetizing

During long periods of use, the cassette tape deck heads may become slightly magnetized. As a result, high frequency response will decrease, noise may develop, or in extreme cases, high frequencies may be lost or noise may be introduced onto your recordings. To prevent this reduction in sound quality, the heads should be demagnetized at least once for every 50 hours of use. Brand-name demagnetizers are available for this purpose.

Consult the demagnetizer manufacturer's directions for using such products on the tape deck heads and capstan.

INTER-TEL®
VOICE MAIL

USER GUIDE

690.8010–0

INTER-TEL
6505 West Chandler Boulevard
Chandler, Arizona 85226
Phone (602) 961-9000

Voice Mail System
User Guide

Contents

Contents (cont)

THE VOICE MAIL SYSTEM

Your Voice Mail System allows users to SEND and RECEIVE messages. With voice mail, these messages are spoken, not written. All that is needed is a standard DTMF tone-generating telephone.

You tell the Voice Mail System what to do by pressing the keys on your telephone keypad.

The system allows you to STORE messages, RETRIEVE messages, REPLY to messages, and SEND messages to others, at any time, from almost anywhere. You can also receive Message Waiting Notification, and return to a live operator at any point during voice mail activity. The RETURN TO OPERATOR feature may not be available with your telephone system. Your System Administrator will inform you if this feature is available.

The system will tell you what you need to do at each step with a series of "voice prompts". Once you become familiar with voice mail, you can bypass the voice prompts and enter the appropriate operations immediately.

What Are Voice Mailboxes?

The system stores your messages in the numbered "voice mailbox" assigned to you by your System Administrator. Your Mailbox Number identifies you to the system. Mailbox Numbers can be changed, but only by your System Administrator.

Your mailbox is ready to receive messages as soon as it is assigned and enabled by your System Administrator. You can personalize it with a short greeting which your callers will hear before they leave their messages.

Mailboxes are private. You can create a Personal Code which acts as a secret password when you use the system. It guarantees that only you will hear your messages.

What Is A Mailbox Directory?

The mailbox directory is an optional listing of all assigned Voice Mailbox Numbers and their owners. Your System Administrator prepares and records the directory. When a caller is asked to "ENTER MAILBOX NUMBER", the caller is also informed that a directory can be heard by pressing the star (*) key.

THE VOICE MAIL SYSTEM

The Voice Mail Menu

This is the Menu. It lists the operations you can perform after you reach the system. To hear the Menu, press the pound (#) key. Then select from the options:

- Press [1] to LEAVE A MESSAGE.
- Press [2] to HEAR YOUR MESSAGES.
- Press [3] to CHECK STATUS OF MESSAGES SENT to others.
- Press [4] to SET UP your mailbox.
- Press [8] to CHANGE CALLER I.D.
- Press [9] to END the call and hang up.
- Press [0] to RETURN TO OPERATOR.*

As a mailbox owner, you must identify yourself when using the Menu. After pressing the [#] key and the desired Menu option, the system will ask you to enter your Mailbox Number and Personal Code (if one exists).

***Note**: The RETURN TO OPERATOR feature may not be available with your telephone system. Your System Administrator will inform you if this feature is available. If you attempt to return to a live operator and the operator is busy, you will hear: **OPERATOR BUSY**, followed by the Menu.

Your Personal Code

Your Personal Code guarantees the privacy of your messages as long as it is kept secret. Even the System Administrator cannot find out what numbers you've chosen for your Personal Code.

Personal Codes consist of up to eight secret numbers of your choice. After identifying yourself to the system by entering your Mailbox Number, you will be prompted to enter your Personal Code (if one exists).

Where Do I Get My Personal Code?

Creating a Personal Code is not required--it is optional. But to guarantee privacy for your messages, you will need to select up to eight secret numbers for your Personal Code. You do this by choosing Personal Set Up from the Menu, and then selecting the option to create a Personal Code (see Getting Started--Personal Set Up).

When Do I Use My Personal Code?

You must press the numbers identifying your Mailbox Number and Personal Code whenever you press pound (#) and select an option from the Menu. If you choose not to create a Personal Code, you will only be asked for your Mailbox Number. Once you have entered your Personal Code, you need not enter it again during the session.

What If I Forget My Personal Code?

No one can find out which numbers you selected for your Personal Code. If you forget these numbers, you must contact your System Administrator to have your code "cleared". When your code is cleared, you will be able to create a new one. Clearing the code does not erase any messages you may have.

How Do I Set Up My Mailbox?

Once you receive your Mailbox Number from your System Administrator, you are ready to set up your mailbox. This includes the options of creating a Personal Code, and recording a Personal Mailbox Greeting.

As a new voice mail user, you do not have a Personal Code. When creating your Personal Code, remember:

- Your Personal Code keeps your messages private. It consists of up to eight secret numbers.
- If you forget your Personal Code, contact your System Administrator. He/She will delete your old code, and you can create a new one.
- The system will confirm the numbers chosen for your Personal Code. If you choose less than eight digits, there will be an approximate three-second delay before confirmation.

PERSONAL SET UP

Creating the Personal Code

Creating Your First Personal Code

To Create Your Personal Code:

- Access the Voice Mail System.
- Press [#] [4] for PERSONAL SET UP.
- Enter your Mailbox Number.
- Press [8] .
- Enter the code numbers you have chosen (up to eight).
- The system will repeat the numbers you have chosen. For example, if you select [2] [1] [4] [3] for your Personal Code, it will confirm, "TWO, ONE, FOUR, THREE".

Change Your Personal Code Any Time

To Change Your Personal Code:

- Access the Voice Mail System.
- Press [#] [4] for PERSONAL SET UP.
- Enter your Mailbox Number.
- Enter your <u>current</u> Personal Code.
- Press [8] to CHANGE PERSONAL CODE.
- Enter up to eight secret numbers chosen for your **new** Personal Code.
- Press [*] or wait three seconds and the system will repeat your code.

PERSONAL SET UP

Record Your Personal Greeting

You can record a 30-second Personal Greeting your callers will hear when they reach your mailbox. This greeting can easily be changed if desired.

If you do not record a Personal Greeting, callers will simply hear your Mailbox Number. A caller can skip the greeting by pressing [4] after entering the desired Mailbox Number.

To Record Or Change Your Personal Greeting:

- Access Voice Mail.
- Press [#] [4].
- Enter your Mailbox Number and Personal Code.
- Press [1].
- Wait for the tone, then begin your Greeting.
- When you finish, wait <u>three to four seconds</u> and then press [4].

Record Your Personal Greeting (cont)

After recording, you may then:

- Press [1] to RE-RECORD your greeting.
- Press [2] to REPLAY and listen to your recorded greeting.

To DELETE Your Mailbox Greeting:

- Access Voice Mail.
- Press [#] [4].
- Enter your Mailbox Number and Personal Code.
- Press [7] To DELETE your greeting.
- The system will confirm this with:

  DELETED.

LEAVE MESSAGES

Leave A Message

You can leave messages in any mailbox whenever you call voice mail. When you reach the system, you will hear a System Greeting. You can hear the Mailbox Directory (if there is one) by pressing [*] .

If a directory has not been recorded, or you already know the Mailbox Number you want, simply enter the desired Mailbox Number.

To Leave A Message:

- Access the Voice Mail System.
- Press the desired Mailbox Number. If you are unsure of the number, press [*] for the directory (if one is recorded).
- To skip past the mailbox owner's Personal Greeting, press [4] .
- After the tone, begin your message.
- When you are finished, press [4] .
- The system will state:

  MESSAGE DELIVERED.

  followed by the available options.

LEAVE MESSAGES

Leave Message Options

After you LEAVE A MESSAGE you will hear the following options:

- Press [1] to RE-RECORD your message.
- Press [2] to REPLAY the message you just left.
- Press [6] to RECORD another message.
- Press [7] to DELETE the message you just recorded.
- Press [9] to END THE CALL and hang up.
- Press [0] to RETURN TO OPERATOR (if available).

Leaving A Long Message

Lengthy messages may require more time than the average voice mail message. If your message runs longer than the allowed time, you will hear:

TO CONTINUE, PRESS FIVE.

Press [5] and you will hear:

AT THE TONE, CONTINUE THE MESSAGE.

Wait for the tone, then continue.

Leaving A Distribution List Message

A Distribution List message is one which will be delivered to all members of a Distribution List. Each of the list members will receive a "copy" of the message, which they retrieve from their individual mailboxes. Follow the steps for LEAVING MESSAGES, using the desired Distribution List Mailbox Number.

HEAR MESSAGES

Hear Your Messages

You can HEAR the messages left for you at any time. The system will tell you how many messages you have, and then play them for you.

You will hear new messages first, followed by saved messages. The system will also inform you of the date and time each message was recorded.

To HEAR YOUR MESSAGES:

- Access the Voice Mail System.
- Press [#] [2].
- Enter your Mailbox Number and Personal Code.
- You will hear the messages left for you, followed by the available options. If your mailbox is empty, you will hear:

  NO MESSAGES.
  FOR MENU. PRESS POUND.
  TO END CALL. PRESS NINE.

HEAR MESSAGES

Hear Message Options

After listening to each message you will hear the following options. You may choose one of these at any time:

- Press [1] to REPLY to the message.
- Press [2] to REPLAY the message.
- Press [3] to TRANSFER the message.
- Press [4] to END THE PLAYBACK and hear your options.
- Press [5] to PAUSE or RESTART the message.
- Press [6] to SAVE the message.
- Press [7] to DELETE the message.
- Press [9] to END the call.
- Press [*] to REPEAT these options.

After listening to <u>each</u> message, you must decide whether to TRANSFER, SAVE, or DELETE it, by pressing [3], [6], or [7], respectively.

After you have transferred, saved, or deleted each message, you may then:

- Press [9] to END the call.

SPECIAL FEATURES

Tag, Reply, And Transfer Messages

Tagging Messages

Tagging is one way the system keeps track of messages. This feature:

- Allows the person you called to REPLY to your message without making a separate call or having to enter your Mailbox Number.
- Allows you to use the CHECK STATUS OF MESSAGES SENT option to find out later if your message has been heard.

The system tags messages with your Mailbox Number and Personal Code. This is done automatically if you enter your Mailbox Number and code at some time during your call. The tag is not heard by callers.

To Tag A Message:

- Press [#] [1].
- Enter your Mailbox Number and Personal Code.
- Leave your message as usual.

Helpful Hint

It is a good idea for mailbox owners to first listen to their messages, and then go on to other activities. This insures that your Mailbox Number and Personal Code have been entered, and any messages you leave for others will be tagged automatically.

Tag, Reply, And Transfer Messages (cont)

Send A Quick Reply To A Message

REPLY allows you to respond quickly to a tagged message left by another mailbox owner.

To REPLY To A Message:

- Access Voice Mail.
- Listen to your message.
- To REPLY, press [1]. You can then immediately record a reply in the caller's mailbox without having to dial the caller's Mailbox Number (if the message was tagged).
- After you reply, press [#] [2]. You will hear the message to which you've just replied and can then SAVE or DELETE it.

If you don't press [#] [2] to continue listening to your messages, the message just replied to will automatically be deleted.

Transfer A Message To Another Mailbox

TRANSFER allows you to send an entire message that was left for you to another mailbox owner.

To TRANSFER A Message:

- Access Voice Mail.
- Listen to your message.
- Press [3]. You will hear:

  ENTER MAILBOX NUMBER.

- Press the Mailbox Number to which the message should be transferred. The system will confirm:

  MAILBOX _____.
  MESSAGE TRANSFERRED.

- You will then hear your remaining messages.

CHECK STATUS OF MESSAGES

Check Status of Messages Sent

Can I Find Out If A Message Has Been Heard?

If you tagged a message you left for someone else, you can use the **CHECK STATUS OF MESSAGES SENT** option from the Menu to check later to see if it has been heard.

You can hear only the messages you left. And this feature works only for individual mailboxes, not for Distribution Lists.

To find out if your message(s) have been heard:

- Access Voice Mail.
- Press [#] [3] .
- Enter your Mailbox Number and Personal Code.
- Press the Mailbox Number where you left the message.

If your message has been heard, you will hear:

NO MESSAGES.
FOR MENU, PRESS POUND.
TO END CALL, PRESS NINE.

This means that the called party has received your message(s).

Check Status of Messages Sent (cont)

If your message has not been heard, the system states the number of messages not heard and then plays them. While listening, you have the following options:

- Press [2] to REPLAY the message.
- Press [6] to SAVE the message.
- Press [7] to DELETE the message.

When done, you will hear:

FOR MENU, PRESS POUND
TO END CALL, PRESS NINE.

* **Note:** Your System Administrator determines whether you can delete the unheard messages you left in someone else's mailbox. This option may not be allowed on your system.

CHANGE CALLER I.D.

Change Caller I.D.

This feature allows two or more mailbox owners to listen to their messages and perform any other voice mail activities during one call to the system.

The first person will:

- Access Voice Mail.
- Perform desired voice mail functions.
- Press [#] to hear the Menu.
- Press [8] to CHANGE CALLER I.D.
- The system will request:

  ENTER YOUR MAILBOX NUMBER.
  ENTER PERSONAL CODE.

The second person:

- Takes the phone.
- Enters his/her Mailbox Number and Personal Code.
- Hears the Menu and performs desired voice mail activities.

This sequence can be repeated as many times as needed.

QUICK REFERENCE

TO ACCESS THE VOICE MAIL SYSTEM:

- Press the Voice Mail System Key: _____
- Dial the in-house Voice Mail Extension Number: _____
- Dial the outside Voice Mail Access Number (_____) _____

VOICE MAIL AT-A-GLANCE

Press [#] [1] to LEAVE A MESSAGE.

Press [#] [2] to HEAR YOUR MESSAGES.

Press [#] [3] to CHECK STATUS OF MESSAGES SENT.

Press [#] [4] to SET UP your mailbox.

Press [#] [8] to CHANGE CALLER I.D.

Press [#] [9] to END the call.

Press [#] [0] to RETURN TO OPERATOR (if available).

Press [#] to HEAR the MENU.

Press [*] for HELP.

HELPFUL HINTS: VOICE MAIL MADE EASY

---

1. Mailbox owners should listen to their messages first and then perform other voice mail activities. This insures that the Mailbox Number and Personal Code (if one exists) have been entered, and any messages left for others will automatically be tagged.

2. A caller may skip past a mailbox owner's greeting by pressing [4] after entering the desired Mailbox Number.

3. To avoid hearing old messages again and again, press [7] to delete them as soon as they've been heard.

4. When recording a mailbox greeting, always wait a few seconds and then press [4] to end the recording.

5. Return to the Menu at any time by pressing the [#] key.

6. Callers can interrupt the voice prompts by pressing the desired key(s) at any time.

7. When help is desired, callers only need to press the [*] key, and a list of options will be heard.

8. Mailbox owners may perform as many operations as they want before ending the voice mail call.

9. When you have finished a voice mail session, press [9] to END THE CALL.

MAILBOX DIRECTORY

Individual Mailbox Directory:

Mailbox	Name	Mailbox	Name
	Administrator		

Distribution List Mailbox Directory:

Mailbox	Name

MESSAGE WAITING INDICATION

Your Voice Mail System may have a Message Waiting Indication feature. Your System Administrator will inform you if your company's system utilizes this option. It provides mailbox owners with visual confirmation of the status of the Voice Mail System.

If your telephone is equipped with a Message Waiting Indicator, it will light and/or blink to show you if your Voice Mail System is in use or if you have any new messages.

Final 3/87

INTER-TEL®
VOICE MAIL

INSTALLATION MANUAL

690.8012-0

INTER-TEL
6505 West Chandler Boulevard
Chandler, Arizona 85226
Phone (602) 961-9000

DISCLAIMER

This Manual is provided by Inter-Tel. While reasonable efforts have been taken in the preparation of this material to insure its accuracy, the manufacturer makes no expressed or implied warranties of any kind with regard to the documentation provided herein. Further, Inter-Tel reserves the right to revise this publication and to make changes from time to time in the content hereof without obligation of the manufacturer to notify any person or organization of such revision or changes.

INSTALLATION MANUAL

Contents

CHAPTER 1

SYSTEM DESCRIPTIONS

Contents

INTER-TEL VOICE MAIL SYSTEM

Safety Summary

The following general safety precautions must be observed during all phases of operation, installation, and service of the Voice Mail System. Failure to comply with these precautions or with specific warnings elsewhere in this document violates safety standards of design, manufacture, and intended use of the instrument. The manufacturer assumes no liability for the customer's failure to comply with these requirements.

1. This instrument and options must be installed by authorized installers per the instructions given in this Manual. If you have questions, contact your dealer or service center.

2. Read and understand all instructions before proceeding with installation and operation.

3. Follow all warnings, cautions, and instructions marked on the instrument and in this manual. Safety symbols are:

   Instruction Manual symbol: the instrument will be marked with this symbol when it is necessary for the user to refer to the instruction guide.

   Indicates hazardous voltages.

   Indicates earth ground terminal.

Warning

The **WARNING** sign denotes a hazard. It calls attention to a procedure, practice, or the like, which, if not correctly performed or adhered to, could result in personal injury. Do not proceed beyond a **WARNING** sign until the indicated conditions are fully understood and met.

CAUTION

The CAUTION sign denotes a hazard. It calls attention to an operating procedure, or the like, which, if not correctly performed or adhered to, could result in damage or destruction of part or all of the instrument. Do not proceed beyond a CAUTION sign until the indicated conditions are fully understood and met.

4. Unplug this instrument from the wall outlet before cleaning. Do not use liquid cleaners or aerosol cleaners. Use a damp cloth for cleaning.

5. Do not use this instrument near water, for example, near wash bowls, or utility tubs, in a wet basement, or near swimming pools, hot tubs, or saunas.

6. Do not place this instrument on an unstable cart, stand, or table. This instrument may fall and damage the equipment.

7. Slots and openings in the cabinet and the back and bottom are provided for ventilation, to protect it from over-heating. These openings must not be blocked or covered. The openings should never be blocked by placing the instrument on a sofa, rug, or other similar surface. This product should never be placed near a radiator or heat register. The instrument should not be placed in a built-in installation or enclosure unless properly ventilated.

8. BEFORE APPLYING POWER check that this instrument will be operated only from the type of power source indicated on the marking label. If unsure of the type of power supply at your facility, consult your dealer or power company.

9. GROUND THE INSTRUMENT by use of the three-wire grounding-type plug with which this instrument is equipped. This plug will only fit into grounding-type power outlets. This is a safety feature. If you are unable to insert the plug into the outlet, contact your electrician to replace the outlet and insure you have the grounding plug.

Warning

Any interruption of the protective (grounding) conductor or disconnection of the protective earth terminal will cause a potential shock hazard that could result in personal injury.

10. Do not allow anything to rest on the power cord. Do not locate the instrument where the cord will be abused by persons walking on it or placing materials on it.

11. This instrument may be equipped with a line filter to reduce electromagnetic interference and must be properly connected to a grounded receptacle to minimize electric

shock hazard. Operation at line voltages or frequencies in excess of those stated in the instrument data labels may cause leakage currents exceeding 5.0mA peak.

12. Do not overload wall outlets and extension cords as this can result in the risk of fire or electric shock.

13. Never push objects of any kind into this instrument through cabinet slots as they may touch dangerous voltage points or short out parts that could result in a risk of fire or electric shock. Never spill liquid of any kind on the instrument.

14. There are no user-serviceable parts or adjustments within this instrument. To reduce risk of electrical shock, do not disassemble this instrument, but take it to a qualified service center when service or repair work is required. Opening or removing covers may expose you to dangerous voltages or other risks. Incorrect reassembly can cause electric shock when the instrument is subsequently used.

15. Unplug this instrument from wall outlet and telephone network and refer to qualified service centers under the following conditions:

    A. When the power cord or plug is damaged or frayed.

    B. If liquid has been spilled into the instrument or if it has been exposed to rain or water.

    C. If the product does not operate normally by following the operating instructions. There are no adjustment controls.

    D. If the instrument has been dropped or the cabinet has been damaged.

    E. If the instrument exhibits a distinct change in performance.

16. Review the Federal Communications Commission Compliance Information before installation and operation.

SAVE THESE INSTRUCTIONS

INTER-TEL VOICE MAIL SYSTEM

Federal Communications Commission Compliance Information

The Voice Mail System meets or exceeds the requirements of the following standards:

1. FCC Part 68 to telephone network protected connection:

   FCC Registration No. ERB5XZ-15268-AN-N
   Ringer Equivalence No. 0.4 A
   USOC No. RJ-11 (Connection jack)

2. FCC Part 15, Subpart J, Class B for RFI/EMI.

3. UL Listed under Standard # 1459.

4. NSTA Proc. 1A for shipping package.

INSTRUCTIONS TO USER: Before installation or use of this instrument, read the following instructions. If you have questions, contact your authorized dealer, service center or installer.

Communications Network

This instrument (as of date of manufacture) is compatible with telephone company communications facilities with which it was intended to operate. However, if the telephone company changes its communications facilities, equipment, operation, or procedures such that this equipment is no longer compatible, the manufacturer is not responsible for the cost of modification or replacement of the instrument. (If you have questions about compatibility, contact your authorized dealer or telephone service provider).

Prior to installation, the telephone company must be notified of the intended installation. The instrument registration number and ringer equivalence number must be provided to the telephone company. A Universal Service Order Code (USOC) number for the telephone service jack must be specified for installation.

The FCC does not allow this class of instrument to be connected to party lines or coin lines.

Federal Communications Commission Compliance Information (cont)

If there are problems with the instrument or a malfunction is suspected, immediately disconnect the instrument from the communications facility, and from power, until the malfunction is corrected or it is determined that the equipment is operating properly. The telephone company can, at its option, discontinue service to a malfunctioning instrument if the instrument is causing harm to the telephone network. Once the malfunction is corrected, service can be restored.

This equipment is an FCC registered device and can only be repaired by qualified personnel at an authorized service center. FCC rules stipulate that repair by unauthorized persons voids the FCC registration and any factory warranty.

Radio Frequency Interference

This instrument generates and uses radio frequency energy and if not installed and used properly (in strict accordance with manufacturer's installation and operation instructions), it may cause interference to radio or television reception. It has been tested and found to comply with limits for a Class B computing device pursuant to Subpart J of Part 15 of FCC rules, which are designed to provide reasonable protection against such interference when operated in a residential installation.

If this instrument does cause interference to radio or television reception, which can be determined by turning the instrument off and on, the user is encouraged to try to correct the interference by one or more of the following measures:

1. Re-orient the receiving antenna.
2. Relocate the instrument with respect to the receiver.
3. Move the equipment away from the receiver.
4. Plug the equipment into a different outlet so that instrument and receiver are on different branch power circuits.

If necessary, consult your authorized dealer or service center for additional suggestions. The manufacturer is not responsible for any radio or television interference caused by unauthorized modifications to this instrument. It is the responsibility of the user to correct such interference.

WARRANTY

For a period of one (1) year from the date of shipment to Buyer, INTER-TEL warrants the Equipment (except for fuses and lamps) to be free from defects in material, workmanship, or both, and to comply with specifications for the Equipment, as set forth in the Installation and System Administration Manuals. Buyer's sole and exclusive remedy for breach of this Limited Warranty shall be to have the defective Equipment (or parts) repaired or replaced. Shipping costs incurred returning warranty work to INTER-TEL shall be paid for by the Buyer. This Limited Warranty extends only to the Buyer, not to any customer, user, or third party. This Limited Warranty does not apply to Equipment (or parts) damaged by improper handling, normal wear and tear, accidents, lightning damage, negligence, or improper use or maintenance, and does not apply to Equipment altered without authorization by INTER-TEL. This Limited Warranty does not extend to any claims, suits, damages, liabilities, costs, and expenses arising from any act, action, or inaction of Buyer. Although the Moss-Magnuson Act should not apply, in the event that it is held to apply by a court of competent jurisdiction, the implied warranty of fitness for a particular purpose shall extend for the one-year period from the date of the Equipment shipment to Buyer.

THIS WARRANTY IS IN LIEU OF AND EXCLUDES ALL OTHER LIMITED WARRANTIES, EXPRESS OR IMPLIED, INCLUDING, BUT NOT LIMITED TO, THE IMPLIED WARRANTY OF MERCHANTABILITY OR FITNESS FOR A PARTICULAR PURPOSE. THERE ARE NO WARRANTIES WHICH EXTEND BEYOND THIS LIMITED WARRANTY. IN NO EVENT SHALL INTER-TEL BE LIABLE FOR LOSS OF ANTICIPATED PROFITS, INCIDENTAL OR CONSEQUENTIAL DAMAGES, LOSS OF TIME OR OTHER LOSSES INCURRED BY BUYER IN CONNECTION WITH THE PURPOSE, POSSESSION, OPERATION, OR USE OF THE EQUIPMENT, SUCH CLAIMS BEING EXPRESSLY WAIVED BY THE INSTALLING COMPANY.

DEFECTIVE UNIT RETURN POLICY

To return a unit, contact Inter-Tel's Material Return Authorization (MRA) Department to obtain a material return tag. Properly fill out the tag, according to the guidelines below, and attach it to the defective unit.

NOTE: Inter-Tel does not accept the return of defective units without MRA tags.

(1) Obtain an MRA number from Inter-Tel's Order Processing Department.

(2) Identify the unit by the equipment name, part number, and serial number.

(3) Describe the defect and, if applicable, the circuit number related to the defect. Include the alarm message, if possible.

(4) Document the estimated length of time the part had been in service prior to the failure.

(5) Attach the upper portion of the tag to the defective equipment. Retain the bottom portion for your files.

(6) Write the MRA number and **ATTN: MRA** on the outside of the box before shipping.

Customer Support Department

If problems persist, contact Inter-Tel's Customer Support Department for assistance. They can be reached from 8:00 AM to 5:00 PM Mountain Standard Time at 602-961-9000 or 1-800-523-8180.

For Emergencies Only: After office hours and on weekends, call 602-961-0277 and leave your message with the operator. A Customer Support Product Specialist will return your call as soon as possible, usually within an hour. Please remember that this is an emergency number for technical service only. Sales questions, equipment orders, etc., can only be handled during normal business hours.

INTER-TEL VOICE MAIL SYSTEM

System Summary

The Voice Mail System is a single channel audio message storage and retrieval product with twenty-four mailboxes. Multiple users can store, retrieve, delete and otherwise control messages using industry-standard, Dual Tone Multi-Frequency signals from telephones after initial system access. The instrument is normally installed in close proximity to the telephone service distribution panels.

Read this section thoroughly before attempting installation of the Voice Mail System. DO NOT PROCEED UNLESS YOU HAVE READ AND UNDERSTOOD THE SAFETY INSTRUCTIONS CONTAINED IN THIS MANUAL.

Description of Ports and Connections

The Voice Mail System has five connections located on the right side of the unit when viewing the front panel (see Figure 1). All port connections are quick disconnect jacks that meet FCC and EIA specifications:

A. Power Connector
B. Message Waiting Indicator (MWI) Output Port
C. Network Port
D. Terminal Port
E. Auxiliary (AUX) Port

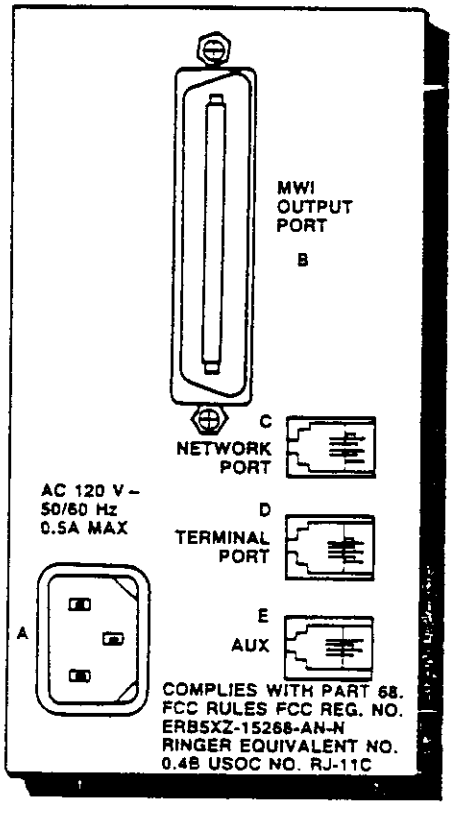

Figure 1. Voice Mail Ports And Connections

Description of Ports and Connections (cont)

A. Power Connection

The instrument is powered by commercially available 115 V 60 Hz AC power (option for 230 V 50 Hz is possible). The system has lithium battery-backed memory and power fail restart for automatic usability after power failures. Batteries are not field replaceable. The unit will operate properly on an input voltage of 90 to 132 VAC.

Power is provided to the system via a power cable with a simple three-prong plug which is attached to the unit and to a grounding receptacle. The power cable is included in the shipping carton.

B. MWI Output Port

The MWI Output Port (B) connects the Message Waiting System to the individual Message Waiting Indicators. It requires a 25-pair telephone-type male connector. Because the necessary length of the connector cable may vary, this is not provided with the Message Waiting System.

C. The Network Port

The Network Port (C) is the primary user access interface to the system. It is the connection that is normally plugged into a standard in-coming telephone line (CO line), and provides the main communication path to the system. It is a two-wire, loop-start, automatic answer, protected interface to the public telecommunications network, or equivalent signalling source, such as PABX. This instrument senses On-hook/Off-hook conditions on this interface and provides automatic disconnect for completed accesses.

This port requires a standard telephone cable with an RJ-11 connector. This cable is not provided with the system because of the diversity of applications and possible locations at the installation site.

Functionally, the Network Port is able to detect ring signals from any source (Central Office, PABX, etc.) that provides ring signals varying from 40 to 150 Volts and 16 to 68 Hz. The port will operate reliably when connected to any network that provides 20 to 100 mAmps of current.

D. The Terminal Port

The Terminal Port (D) allows for access to the system from a local on-premises terminal, the simplest being a telephone. The port operates as a two-wire, -48 Volt DC current source to the connected terminal, and requires a standard telephone cable with an RJ-11 connector. It provides direct access to the system for the terminal, or a busy indication when the Voice Mail System is busy with the Network Port. This port may be selected to bypass the system and connect directly to the Network Port (see On-line/Off-line Commands in the System Administration instructions).

DO NOT CONNECT THIS PORT TO AN INCOMING TELEPHONE LINE (CO LINE) AS IT COULD RESULT IN DAMAGE TO THE VOICE MAIL SYSTEM.

The Terminal Port provides -44 to -52 Volts DC and 20 to 100 mAmps of current. It is recommended that only one phone be connected to this port.

E. The Auxiliary Port

The Auxiliary Port (E) is a data input and output port intended for communication with test and/or accessory equipment. This is an isolated current loop serial port which communicates at rates from 300 to 4800 baud. (No user adjustment is necessary.)

Operating Modes and System Access

The system operates in two basic modes, On-line and Off-line. When it is On-line, all incoming calls via the Network Port will be answered and the caller will be connected to the Voice Mail System.

When the system is Off-line, all incoming calls will ring through to the Terminal Port and a telephone, if one is connected. The system will default to the Off-line condition during power loss or when the unit is unplugged from its power source. The System Administrator may change the operating mode of the Voice Mail System as described in the System Administration instructions.

Access

Access to the system is gained from both the Network and Terminal Ports when the unit is On-line. However, if the system

is busy with a call in progress on the Network Port and access is attempted with a telephone from the Terminal Port, a busy signal will be heard. A busy signal will also be heard from the Terminal Port when the system is initializing after power is connected.

If the system has been placed in the Off-line mode, direct access can only be gained from the Terminal Port. Indirect access can be gained from the Network Port after an incoming call has been intercepted by a receptionist.

Message Waiting Indication

Note: The following message waiting information applies only when using the Voice Mail System's Message Waiting capability and Message Waiting Indicators. In those applications where the telephone system's message waiting capability may be used, refer to the telephone system manual, or to accessory product manuals, for message waiting information (also refer to System Administration instructions).

The Message Waiting System is an integral part of the Voice Mail System. It allows mailbox owners (within the telephone system) to see at a glance if they have any new messages present, and/or if voice mail is busy.

The Message Waiting System (MWS) provides up to 24 Message Waiting Indicator (MWI) outputs. It interprets commands from the Voice Mail System and gives the user four visual status indications via a single LED on the user's MWI. The patterns of visual confirmation are described on page 14.

Voice Mail Message Waiting provides an indication of new messages only. Messages which have been heard and saved will not activate the LED indicator light.

The Voice Mail System with Message Waiting Indication is shipped with 12 Message Waiting Indicators (MWIs) with Indicator Cables (6 feet long). The user must provide the following prior to installation:

- 1 25-pair Telephone-Type Male Connector and Cable.
- 1 Type 66 Connecting Block, or equivalent, with a minimum of 25-pair.

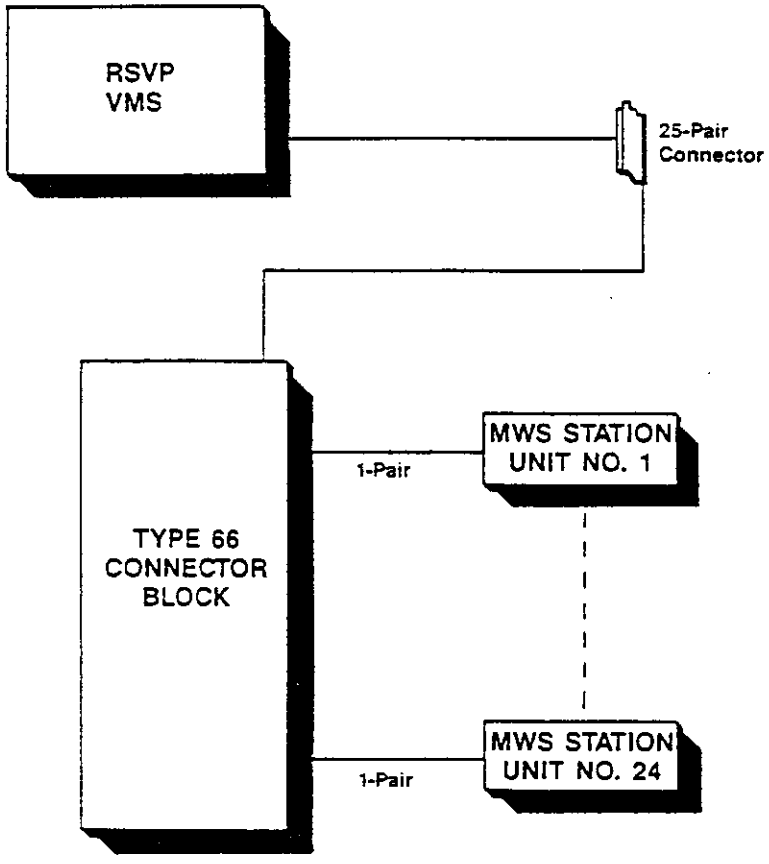

Figure 2. Voice Mail with Message Waiting, Block Diagram

Message Waiting Indicators (MWI)

The MWIs contain single LEDs for Voice Mail status indication. Each MWI is connected to the system through its own pair of wires. All MWIs are terminated at the user-provided Connecting Block (see Figure 2: Block Diagram). The four status indications provided by the MWIs are:

- Available for use
- System in use
- Available with new message waiting in user's mailbox
- Busy with new message waiting in user's mailbox

The following diagrams illustrate the lighting pattern for the MWIs:

Indicator Lamp Is:	RSVP Being Used?	Any New Messages?
OFF	NO	NO
ON (Steady)	YES	NO
OFF, SHORT ON	NO	YES
ON, SHORT OFF	YES	YES

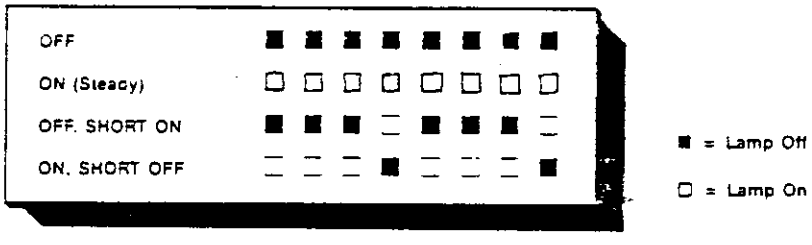

CHAPTER 2

SYSTEM INSTALLATION

Contents

INTER-TEL VOICE MAIL INSTALLATION

Preparation

This installation section is intended to assist in a basic installation of both the Voice Mail System and the Message Waiting Indicators (MWIs). Installation should be done by an authorized equipment dealer or provider.

The procedure for installing the Voice Mail System to operate with most PABXs simply involves replacing a selected telephone with the system, and then connecting the RJ-11 telephone connector into the Network Port on the unit. In all other situations, the Voice Mail System is installed in the general location of the Main Distributing Frame (MDF). Installation should always be close to the MDF whenever the Message Waiting System is used.

The following questions should be answered before going to the customer's location and attempting installation.

1. What type phone system does the customer have?

The installation procedure is determined by the type of telephone system used by the customer. If it is a KTS/EKTS, the system will be installed in series with one of the incoming lines, unless an industry-standard single line telephone can be supported. If the telephone system is a PABX, the system can be connected to a single station line (see Installation Procedures for further detail).

2. How long will the installation take?

The installation should take less than one hour for the Voice Mail and Message Waiting Systems to be installed at the MDF. Each Message Waiting Indicator (MWI) will take approximately 10 to 15 minutes to install at each telephone location (if used).

One hour should be allowed to power up and check out the entire system. See the Power Up and Check Out lists at the end of this section to complete the installation process.

3. Is the Message Waiting System to be used?

If the Voice Mail Message Waiting System is to be used, the station cabling must have an extra pair which can be used for connecting the Message Waiting Indicators. If the existing cables do not have the extra pair available, an additional cable must be run to each station location and terminated in an RJ-11 telephone jack.

4. Where will the Voice Mail System be located?

When the system is installed with Message Waiting, or is used with a KTS/EKTS, it should be located close to the MDF to reduce the length of cable runs. It needs an average room environment, and a good rule of thumb is: "If people are comfortable, so is the Voice Mail System".

5. Which PABX extension or KTS/EKTS incoming line is to be connected to the Voice Mail System?

Once the line or extension to be connected to the system has been determined, the hardware needed to complete the installation can be assembled (see the sample parts list on page 18), and the appropriate sequence of steps can be planned.

6. What additional materials are required to complete the installation?

Knowing which line or extension is to be connected to the system will help determine what, if any, additional hardware is required, i.e., RJ-11 modular jacks, modular telephone cable, jumper wire, etc. This information will also help determine if a telephone system line or station card is already available, or if it will be provided by the local telephone company.

7. How many voice mailboxes will be assigned, and to whom?

If the installer knows how many of the voice mailboxes are to be assigned, and who will be using them, it is possible to <u>enable</u> the mailboxes before the System is installed. This is described in the System Administration instructions.

8. Which telephone stations are to have Message Waiting Indicators (if any)?

The System Administrator or telecommunications manager should decide which voice mail users are to have MWIs at their internal telephone stations. The locations which will be connected for Message Waiting at the MDF must be noted, so that the correct locations are assigned to the appropriate MWI.

Fill out the MWI Location Table (Table 2, page 36) for reference when completing the MWI wiring connections and making MWI assignments.

Preparation (cont)

9. Who will be the System Administrator?

If the identity of the System Administrator is known, this person can be contacted prior to going to the site. The System Administrator should be trained as both a mailbox owner and as Administrator, since other users will contact this person with questions and/or problems.

Materials Required

When the preceding questions have been answered, the installer can prepare an itemized list of the materials needed to complete the installation of the Voice Mail System and its Message Waiting System, if used. See Figure 3 on the following page, for a description of materials and connections.

A sample list of materials might include:

1. 2 ea. RJ-11 modular wall mount jacks
2. 2 ea. RJ-11 modular telephone cables
3. N ft. Solid telephone jumper wire to connect RJ-11 jacks to MDF
4. N ft. 25-pair cable with one end terminated in a male 50-pin telephone-type connector for the Message Waiting System
5. N ft. 2-wire MDF jumper wire to cross-connect Message Waiting System to Message Waiting Indicators
6. 1 ea. Type 66 Connecting Block, or equivalent, for the MWS
7. N Message Waiting Indicators

The system can be placed on a shelf or mounted to a wall. The system weighs 14.3 lbs., so the wall must be strong enough to hold it. Instructions for wall mounting and a template for drilling the necessary holes are provided with the system.

Note: For applications requiring accessory voice mail products, refer to the accessory manuals for the materials required.

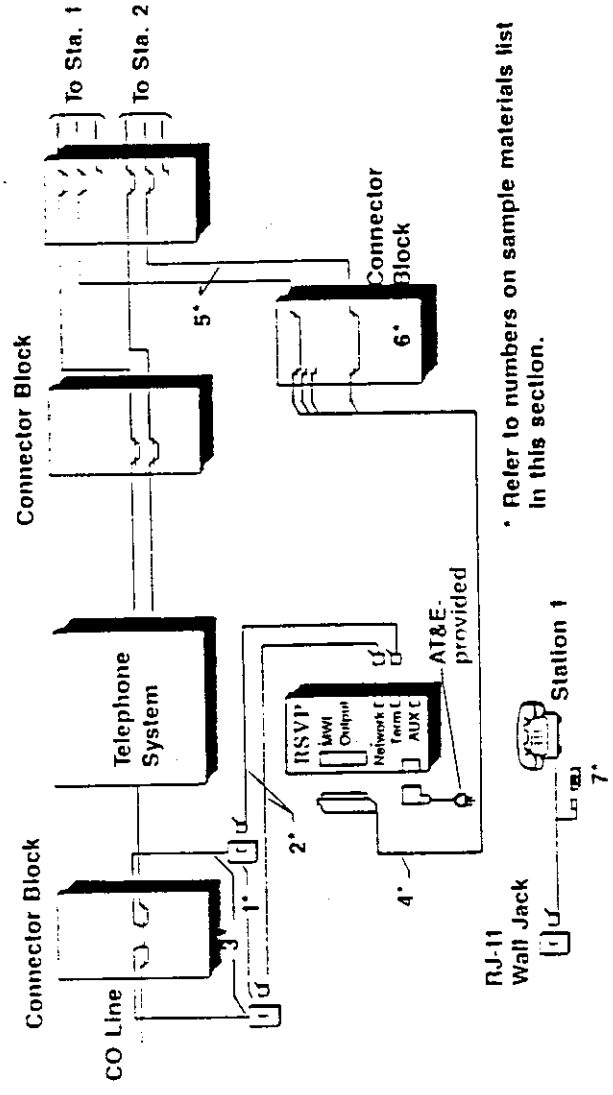

Figure 3. Installation: Materials and Connections

VOICE MAIL CONNECTIONS

Introduction

This section describes the four different interfaces which may be used when connecting the Voice Mail System to various telephone systems. The method used will depend upon the type and capability of the telephone system with which it is installed.

The Network Port functions like a single line 2500 telephone set with automatic answering. The Network Port can be connected to any of the following:

1) a loop start Central Office (CO) line.
2) an extension from a Private Automatic Branch Exchange (PABX);
3) an extension from an Electronic Key Telephone System (EKTS), <u>if the EKTS has single line capability</u>.

The Terminal Port can be compared to a loop start CO dial tone line, with the exception that the unit provides voice prompts instead of dial tone. The Terminal Port can be connected to a single line telephone set or to the CO line circuit of a PABX or EKTS. The Terminal Port provides the necessary voltages to allow a telephone, or the telephone system's CO line circuit, to function properly.

VOICE MAIL CONNECTIONS

Method 1

This is used in a home or office environment where one business line is connected to the user's home or office telephone. The system is connected in series with the telephone line and the telephone set (see Figure 4).

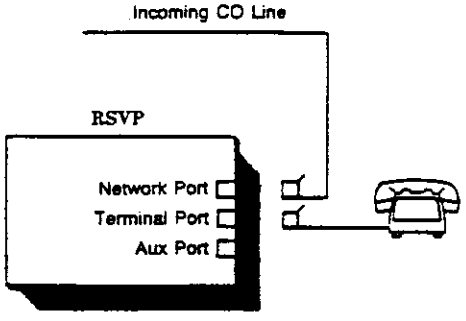

Figure 4. Installation: Method 1

Installation:

- Unplug the telephone set.
- Connect the telephone <u>line</u> to the Network Port.
- Connect the telephone <u>set</u> to the Terminal Port.

Operation:

Inside Access: Go off-hook on the telephone connected to the Terminal Port and follow the instructions in the User Guide.

Outside Access: Dial the directory number of the line connected to the Voice Mail System. When it answers, proceed as described in the User Guide.

On-line/Off-line: The system can be taken On- and Off-line during normal business hours. This allows calls to ring through to the telephone when in Off-line mode. It can also be programmed to answer after a given number of rings when Off-line. See the System Administration instructions for details on how to take the unit On-and Off-line.

VOICE MAIL CONNECTIONS

Method 2

In this case there is a telephone system (typically a key system) connecting the user to the switched network (see Figure 5). As in Method 1, voice mail is connected in series with an incoming CO line. One of the incoming lines must be selected for connection to the system. In most cases, the last line of the incoming group is selected. This allows the system to act as an overflow attendant.

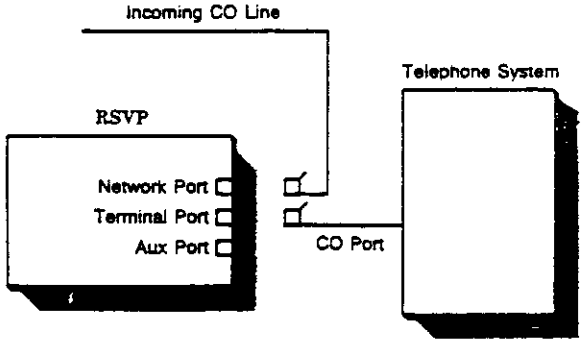

Figure 5. Installation: Method 2

Installation:

- At the Main Distributing Frame (MDF), disconnect the selected CO line and terminate it on an RJ-11 jack. Label it **Network Port**.
- Connect the key system's CO line circuit to a second RJ-11 jack. Label it **Terminal Port**.
- Connect the RJ-11 jack labeled Network Port to the Network Port using a standard RJ-11 cable.
- Connect the RJ-11 jack labeled Terminal Port to the voice mail Terminal Port using a standard RJ-11 cable.

Method 2 (cont)

Operation:

Inside Access: Depress the CO line key associated with the CO line circuit that is connected to the Terminal Port. When the system answers, continue according to the instructions in the User Guide.

Direct Outside Access: Dial the directory number of the line assigned to the Voice Mail System. When it answers, continue as above.

Outside Access Via Telephone System: When a caller reaches the company via the normal CO lines and wishes to leave a message, a receptionist can connect the caller using either the supervised or unsupervised conference feature of the telephone system. This typically involves putting the caller on hold, operating the "CONFERENCE" key, operating the voice mail key and then the "CONFERENCE" key again. Check the telephone system's user manual for specific operating instructions.

Night Answer: There are two ways to provide night answer capability:

1. If the local telephone company can provide Call Forwarding, call forward the main company number to the number connected to the Voice Mail System.

2. Connect a 4-pole double-throw switch to disconnect the voice mail line, and connect the first business line to the system (see Figure 6, below).

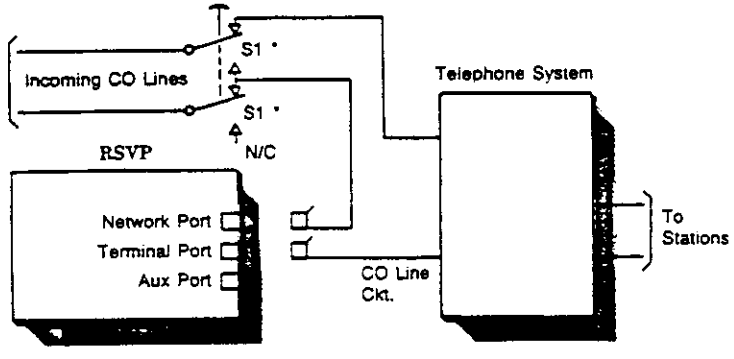

* S1 Shown in the DAY Mode.

Figure 6. Installation: Night Answer/Method 2

VOICE MAIL CONNECTIONS

Method 3

This installation uses both a single line extension and a CO line circuit from the telephone system. The Network Port is connected to an extension port from the telephone system. The Terminal Port is connected to the telephone system's CO line circuit (see Figure 7, below).

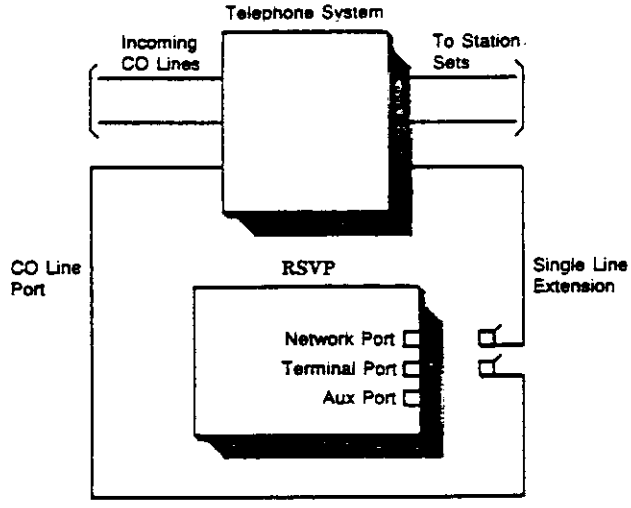

Figure 7. Installation: Method 3

Installation:

- Terminate the telephone system's Single Line Extension (this may be a Single Line Card or OPX Adapter) on an RJ-11 jack at the Voice Mail System. Label the jack **Network Port**.
- Terminate the telephone system's CO Line/Trunk circuit on an RJ-11 jack. Label it **Terminal Port**.
- Using two RJ-11 cables, connect the jack marked Network to the Network Port, and the jack marked Terminal to the Terminal Port.
- Depending on the type of telephone system, the CO Line/Trunk circuit will require a dedicated access key or dial access code (such as those used for WATS service, 8, or Tie lines, 7X). This insures that callers will reach the Voice Mail System and not a CO dial line.

Method 3 (cont)

Operation:

Inside Access: Depress the Voice Mail Line key, or dial the access code assigned to the CO line circuit connected to voice mail. When it answers, continue per the User Guide.

Outside Access: Many telephone systems provide a feature commonly called Direct In-Line (DIL). This allows a caller to dial a specific CO line number, and when the telephone system recognizes the incoming call, it connects the caller to the assigned extension. If the telephone system provides this feature, callers can reach voice mail directly from outside the telephone system. If this feature is not available, the caller will have to dial the main company number and ask to be transferred to the Voice Mail System.

Transferring calls to the Voice Mail System: Callers may be transferred to voice mail in the same manner that callers are transferred to any other extension.

Night Answer: Many telephone systems can be programmed to route night calls to a specific extension in the telephone system. If the telephone system provides this feature, it should be used. If not, a 4-pole double-throw switch will be required to disconnect the single line extension from the Network Port and connect the first line of the company's incoming line group to the Network Port (see Figure 8, below). With the switch in the Night position, any call on the first line will be answered by voice mail. All calls on the remaining lines will route according to the normal EKTS Night routing.

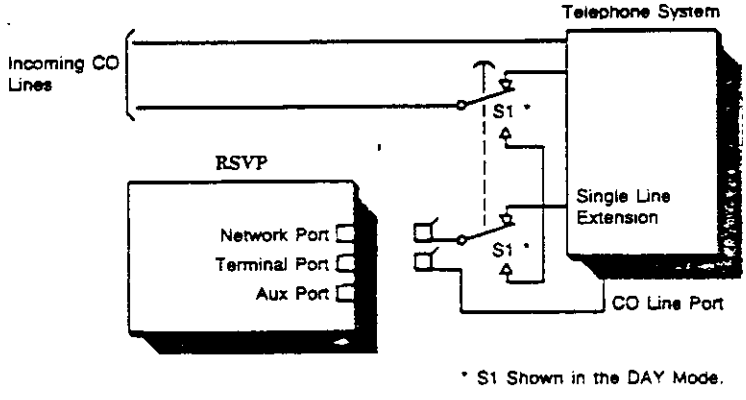

Figure 8. Installation: Night Answer/Method 3

VOICE MAIL CONNECTIONS

Method 4

This connection requires that a single line extension from the telephone system be connected to the Network Port. The Terminal Port is <u>not</u> used with this method (see Figure 9, below).

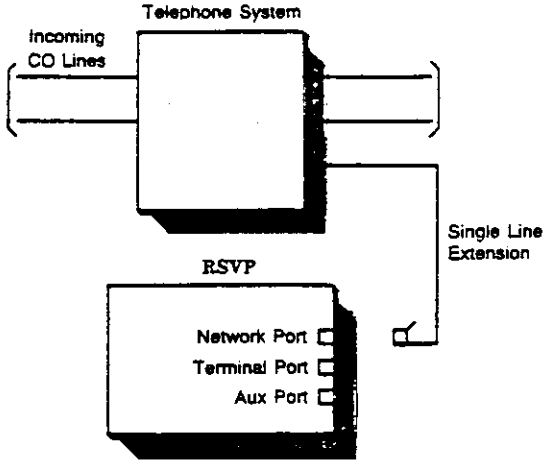

Figure 9. Installation: Method 4

Installation:

- Terminate the Single Line Extension of the telephone system on an RJ-11 jack near the Voice Mail System. Label the jack **Network Port**.
- Connect the RJ-11 jack marked Network Port to the Network Port, using an RJ-11 cable.

Operation:

Inside Access: Dial the extension number assigned to the Voice Mail System. When it answers, continue as described in the User Guide.

Outside Access: Many telephone systems provide a feature commonly called Direct In-Line (DIL). This allows a caller to dial a specific CO line number, and when the telephone system recognizes the incoming call, it connects the caller to the assigned extension. If the telephone system provides this feature, callers can reach voice mail directly from outside the system. If this feature is not available, the caller must dial the main company number and ask to be transferred to voice mail.

Transferring calls to the Voice Mail System: Callers may be transferred in the same manner that calls are transferred to any extension.

Night Answer: Many telephone systems can be programmed to route night calls to a specific extension in the telephone system. If the telephone system provides this feature, it should be used. If not, a 4-pole double-throw switch will be required to disconnect the single line extension from the Network Port. Connect the first line of the company's incoming line group to the Network Port (see Figure 10). With the switch in the Night position, any call on the first line will be answered by the Voice Mail System.

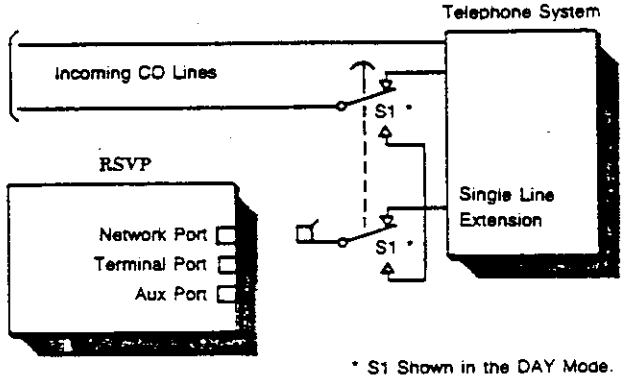

Figure 10. Installation: Night Answer/Method 4

VOICE MAIL APPLICATIONS TABLE

TELEPHONE SYSTEM	METHOD 1	METHOD 2	METHOD 3	METHOD 4	HARDWARE REQUIRED
AT&T MERLIN			X		1,2
HORIZON				X	
DIMENSION				X	
SYSTEM 25/75/85				X	
CENTREX				X	
COMDIAL EXECUTECH 616/824		X			
EXECUTONE ENCORE 616/1232			X		6
EQUITY II/K1800			X		6
GATEWAY K2100			X		6
FUJITSU FOCUS 20/50/100			X		
GTE JUPITER			X		12
OMNI SBCS			X		
HONEYWELL HKX 20/HKX 25		X			
HKS/HKX 30			X		
HBX			X		6
INTER-TEL HITEC 412/824/1648		X			
PHOENIX 412/616/824/1232/1648		X			
PHOENIX 2456/32X128			X		6
SPK II and GX			X		
ISOETEC EZ 36/96		X	X		3,4,5
IWATSU OMEGA III ET 412/816		X			
OMEGA III ET 2460			X		6
OMEGA IV EX 616/816/824/1648			X		6,7

TELEPHONE SYSTEM	METHOD 1	METHOD 2	METHOD 3	METHOD 4	HARDWARE REQUIRED
KANDA EK-616		X			
EK-1232/EK-2064			X		6
MITEL SX 100/200/1000				X	
NEC PATRICIAN EL Series			X		6
ELECTRA 616		X			
ELECTRA 1648/PATRICIAN 100				X	
NORTHCOM PREMIER 308/616/1A3		X			
PREMIER 1648			X		
NORTHERN TELECOM SL-1			X		11
VANTAGE 12		X			
VANTAGE 48			X		
ROLM CBX				X	10
SIEMENS SATURN II			X		11
TEL PLUS 616		X			
1648			X		
THOMSON-CSF OPUS 20/40/80			X		
TIE ULTRACOM III, IV, V			X		6
MERITOR 3, 4, 5			X		6
BUSINESSCOM PLUS, AT			X		9
TOSHIBA STRATA VI			X		6
STRATA XII, XX			X		
PERCEPTION			X		
WALKER POETS			X		6
RELIANT 16/32/50		X			

VOICE MAIL APPLICATIONS TABLE

Key: Additional Hardware Required

---

1. The Merlin Systems require a Model 2301 BTI Adapter to connect an extension port to the Network Port. The [#] key must be pressed twice whenever the [#] key must be used. The Merlin will produce the DTMF tone on the second depression.

2. The CO Line Port connected to voice mail must have its own dedicated key. When it is depressed, the caller will <u>only</u> access the Voice Mail System.

3. The EZ 36 requires an SLT card and the EZ 96 requires an SLC card.

4. Method 4 can be used with the EZ 96 if it is equipped with 2206 H1-X5 software or above. This software is required to provide DTMF tones on internal calls.

5. Isoetec systems will disconnect the called party when the calling party hangs-up. Even though a loop is present on the called party's line, the system will allow another caller to be connected to that station. This will allow a caller to access voice mail before it has disconnected. **If the last caller did not release the mailbox, the next caller will be connected into that mailbox. It is important that mailbox owners dial [9] to indicate they are disconnecting before hanging up.**

6. An Off-Premises-Extension (OPX) Adapter with ringing generator is required to connect an extension port to the Network Port.

7. The Omega IV CO Line card will block the audio receive path for 50 to 1350 milliseconds after depressing a DTMF key . This will block a portion of the voice mail prompts heard by the caller. The shunt timing is adjustable by switch settings on the CO Line card. See the Omega Installation Manual for switch settings.

8. A single Line Circuit Card is required. The Voice Mail System requires one port of the Single Line Card. The DTMF receiver is not required if the remaining line circuits are not connected to standard telephones.

VOICE MAIL APPLICATIONS TABLE

Key: Additional Hardware Required (cont)

---

9. An OPX Adapter with ringing generator is required. Use OPX Adapter B-STU-D, P/N15181 for the Businesscom Plus and OPX Adapter C-STU-D, P/N 10836 for the AT. If standard telephones are to be used in addition to the Voice Mail System, a DTMF Receiver, B-MFRU-B, P/N 15179B, is required for each station. This receiver is used for either the AT or Businesscom Plus.

10. The extension connected to voice mail requires a "Terminate Only" Class of Service.

11. This interface requires both a single line extension and a CO trunk interface. The electronic telephones do not generate DTMF tones on station-to-station calls. The CO trunk connected to the Voice Mail System must be in its own trunk group with its own access code.

12. Single Line compatibility is only available with the Hybrid operation, and must have Feature Package/Cartridge Number 5.

INTER-TEL VOICE MAIL INSTALLATION

Power Up and Initial Check Out

Attach the power cable to the three-pronged power connector on the right side of the unit. Plug the other end into a standard 115VAC grounded outlet.

1. The system will begin an initial formatting procedure. During initialization, the green POWER and amber IN USE lights on the front will remain on.

2. While the system is initializing, operate the KTS/EKTS line key or access the Terminal Port by dialing the PABX trunk access code. The system will generate a busy signal. If you do not hear the busy tone, verify that you are connected via the telephone system to the Terminal Port. To verify that voice mail is working correctly, plug a standard 2500-set directly into the Terminal Port.

   If the system is still initializing, you will hear a busy tone. If it is finished (green ENABLED light on), it will ask you to: "ENTER MAILBOX NUMBER".

3. When the system is ready for use, the amber IN USE light will go off and both the green POWER and ENABLED lights will go on.

4. When the POWER and ENABLED lights are on, access the system by pressing the line key or dialing the number assigned to the Terminal Port. The system should answer and prompt you to: "ENTER MAILBOX NUMBER".

5. Once this prompt is heard, dial 10 on the telephone's key pad and leave a test message. After leaving the message, press [#] [9] and hang up. Wait until the IN USE light goes off and re-access the system. Listen to the message you just left by pressing [#] [2] . (Refer to the System Administration instructions). Press [7] to delete the message, then press [9] and hang up.

6. When this test is completed, repeat the previous steps by dialing the number assigned to the Network Port.

7. If the system fails to work on either port, verify all wiring to be correct. A useful test is to unplug the cable from the Network Port, plug it into a telephone, and verify that you can call and talk over it (see Figure 11).

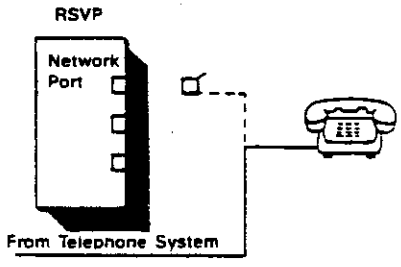

Figure 11. Wiring Test on Network Port

8. If the wiring and telephone equipment prove to be OK, return the unit to the place of purchase or refer to service personnel authorized by the manufacturer.

9. After verifying the installation and basic operation of the system, it is now ready for the System Administrator to begin the set up procedure described in the System Administration instructions. If the System Administrator has difficulty in performing any function, review the function with him/her to ensure proper input of information to the Voice Mail System.

INTER-TEL VOICE MAIL INSTALLATION

System Check Out List

Date _____

Customer _____

PABX

Voice Mail Station Number _____
Voice Mail Trunk Access Code _____

KTS/EKTS

Voice Mail Line/Key Number _____
Voice Mail Telephone Number _____

Refer to the System Administration instructions for details on how to perform the following operations:

1. Voice Mail answers an inside call (Terminal Port) _____
2. Voice Mail answers an outside call (Network Port) _____
3. System greeting can be installed and deleted _____
4. System directory can be installed and deleted _____
5. Can leave, retrieve and delete a message _____
6. Can assign and deliver a message to a distribution list _____
7. Can go off- and on-line using [#] [7] and [#] [#] _____

   Note: It will only go "Off-line" if an extension port or CO line is connected to the Network Port.

8. Can activate the temporary On-line function _____
9. With system busy, caller to Terminal Port hears a busy signal _____
10. If used, calls are routed to and are answered by voice mail in night mode _____

Note: If the Voice Mail System is being installed with a Key Interface Unit (KIU), or Integration Unit (RIU), On-line/Off-line commands are not available.

MESSAGE WAITING SYSTEM INSTALLATION

Procedures

Note: The following information applies only when installing the Voice Mail System's Message Waiting System. In cases where the telephone system's message waiting capability is to be used, refer to the telephone system manual, or to accessory product manuals for message waiting information.

Individual Message Waiting Indicators (MWIs) are connected to the Voice Mail System via an extra pair in the station cable connecting the telephone sets to the telephone system (Figure 12). This extra pair is typically found in most PABX installations.

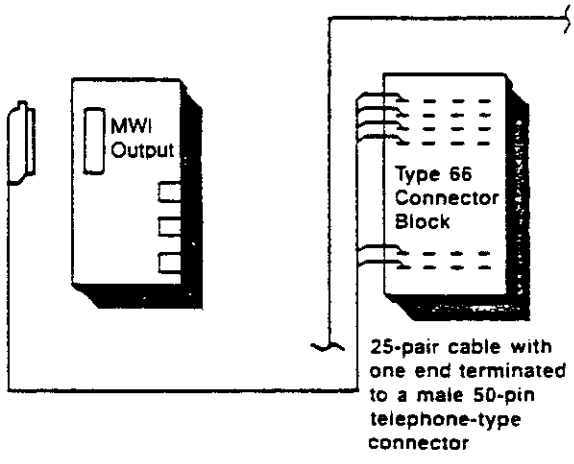

Figure 12. MWS Installation

1. Using the MWI Location Assignments provided by the System Administrator, terminate the 25-pair cable onto the Type 66 Connecting Block, or equivalent (Table 2).

Note: In some cases, MWI location must be entered as 00, where DTMF tones are used to activate the message waiting capability of the particular telephone system being used. Consult the telecommunications manager or equipment supplier for further information.

MWI LOCATION	WIRE COLOR		CONNECTOR PIN NUMBER	MAILBOX NUMBER	NAME
**	W/BL,	BL/W	26, 1	******	**********
24	W/OR,	OR/W	27, 2	_____	_____
23	W/GR,	GR/W	28, 3	_____	_____
22	W/BR,	BR/W	29, 4	_____	_____
21	W/SL,	SL/W	30, 5	_____	_____
20	R/BL,	BL/R	31, 6	_____	_____
19	R/OR,	OR/R	32, 7	_____	_____
18	R/GR,	GR/R	33, 8	_____	_____
17	R/BR,	BR/R	34, 9	_____	_____
16	R/SL,	SL/R	35, 10	_____	_____
15	BK/BL,	BL/BK	36, 11	_____	_____
14	BK/OR,	OR/BK	37, 12	_____	_____
13	BK/GR,	GR/BK	38, 13	_____	_____
12	BK/BR,	BR/BK	39, 14	_____	_____
11	BK/SL,	SL/BK	40, 15	_____	_____
10	Y/BL,	BL/Y	41, 16	_____	_____
09	Y/OR,	OR/Y	42, 17	_____	_____
08	Y/GR,	GR/Y	43, 18	_____	_____
07	Y/BR,	BR/Y	44, 19	_____	_____
06	Y/SL,	SL/Y	45, 20	_____	_____
05	V/BL,	BL/V	46, 21	_____	_____
04	V/OR,	OR/V	47, 22	_____	_____
03	V/GR,	GR/V	48, 23	_____	_____
02	V/BR,	BR/V	49, 24	_____	_____
01	V/SL,	SL/V	50, 25	_____	_____

COLOR CODES:

- W = White
- R = Red
- BK = Black
- Y = Yellow
- V = Violet
- BL = Blue
- OR = Orange
- GR = Green
- BR = Brown
- SL = Slate

* Denotes auxiliary termination point for extra Message Waiting Units. Up to four Message Waiting Systems may be linked together at this point.

Table 2. Wiring Connections For The Type 66 Connecting Block

2. Make sure the MWI Location Table (Table 2) has been filled in for Message Waiting assignments.

3. Plug the male 50-pin telephone-type connector into the mating connector on the Voice Mail System (see Figure 12).

4. Cross connect the MWI outputs for the appropriate mailboxes to the spare pairs (or new pairs) in each of the station cables associated with those mailboxes (Figure 13).

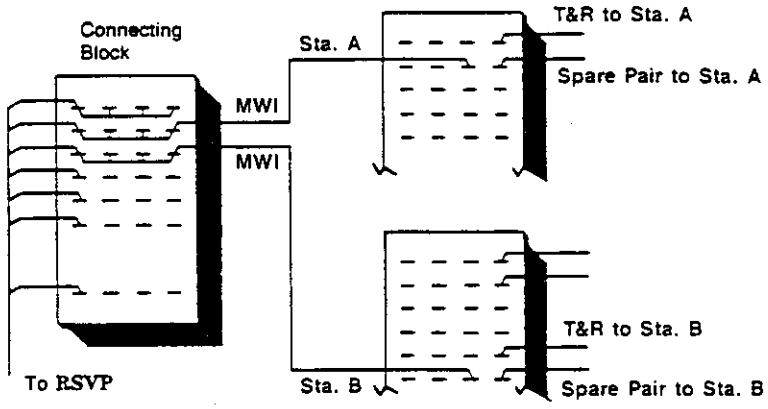

Figure 13. MWI Station Connections

5. At the station end, connect the spare pair (or new pair) to the outside, or pins 1 and 6, of a 6-pin modular jack.

6. Plug the non-Message Waiting Indicator (MWI) end of the provided MWI cable into the wall jack, and the other end into the telephone. As each MWI is connected, call voice mail and verify that the light turns on showing correct installation. The MWI is polarity sensitive. If the MWI does not turn on, reverse the wires on pins 1 and 6 of the RJ-11 jack. If the MWI still does not turn on, check the wiring back to the MDF.

7. Attach the MWI in a convenient location on the telephone, using the self-adhesive strip provided. Return the list of assigned MWI locations to the System Administrator or telecommunications manager.

MESSAGE WAITING SYSTEM INSTALLATION

Initial Check Out

- To test the unit, access voice mail and set up a Distribution List mailbox that includes all mailboxes with MWIs (see System Administration instructions). Once the list is created, leave a message in the Distribution List mailbox. Within a few minutes, all MWIs should indicate a new message is present.
- One at a time, go to each MWI location and delete the message in that mailbox, verifying that the indicator light goes out.
- If any MWI fails to function properly, exchange it with a known good one. If the new one still does not work, verify the wiring back to the system. If the wiring is good, return the unit to the place of purchase or contact your authorized equipment dealer or provider.

Message Waiting System Check Out List

1. All MWIs assigned to correct mailboxes _____
2. All MWIs <u>off</u> while system is idle and no messages _____
3. All MWIs <u>on</u> when system is busy _____
4. MWIs show system busy with message indication _____
5. MWIs show system idle with message indication _____