SX-100™
SX-200™

SUPERSWITCH

VOLUME II
(GENERIC 216)

86-07

MITEL

VOICE COMMUNICATIONS [redacted]
(626) 821-4800

SX-200

WARNING

This equipment generates, uses, and can radiate radio frequency energy and if not installed and used in accordance with the instructions manual, may cause interference to radio communications. As temporarily permitted by regulation it has not been tested for compliance with the limits for Class A computing devices pursuant to Subpart J of Part 15 of FCC Rules, which are designed to provide reasonable protection against such interference. Operation of this equipment in a residential area is likely to cause interference in which case the user at his own expense will be required to take whatever measures may be required to correct the interference.

SX-100

WARNING

This equipment generates, uses, and can radiate radio frequency energy and if not installed and used in accordance with the instructions manual, may cause interference to radio communications. It has been tested and found to comply with the limits for a Class A computing device pursuant to Subpart J of Part 15 of FCC Rules, which are designed to provide reasonable protection against such interference when operated in a commercial environment. Operation of this equipment in a residential area is likely to cause interference in which case the user at his own expense will be required to take whatever measures may be required to correct the interference.

PN 9110-097-002-NA

EXTENSION

IF TENANT SERVICE IS IN USE
ALL ENTRIES MADE ARE ASSIGNED TO THE TENANT NUMBER DIALED [TENANT] DIAL 1-4 [ENTER]

TO ENTER EXTENSION PROGRAMMING PRESS [EXTN]

TENANT								
NAME	[EQPT NUMBER] DIAL 1-112 OR 161-256 (SEE NOTE 1)	[EXTN NUMBER] DIAL CODE OR SEE NOTES 2,3, OR 4	[COS NUMBER] DIAL 1-16	TOLL DENY [ADD] OR DIAL C OR CODE L,2 OR 3 OR [TOLL DENY] TOLL ALLOW (SEE NOTES 5) [DELETE]	[BUSY LAMP NUMBER] DIAL BUSY LAMP NUMBER 1-200 [DELETE]	[PICKUP GROUP] DIAL 1-30 OR [DELETE]	[ENTER]	

NOTES

1. EQUIPMENT NUMBERS 161-256 APPLIES TO SX-200 ONLY
2. TO ASSIGN NON CONFLICTING SINGLE DIGIT DIRECTORY NUMBER, ENTER N# WHERE N IS THE SINGLE DIGIT
3. TO REMOVE EXTENSION PROGRAMMING

   [EXTN] [EQPT NUMBER] DIAL EQUIPMENT NUMBER [EXTN NUMBER] [DELETE]

   EXTENSION MUST BE REMOVED FROM ANY HUNT GROUP BEFORE REMOVING THE EXTENSION PROGRAMMING

4. TO SEE THE NEXT EQPT. NUMBER ASSIGNED AS AN EXTENSION: [EQPT NUMBER] [NEXT]
5. COR 1-3 APPLIES ONLY IF MULTI - DIGIT TOLL CONTROL IS USED

MITEL

CLASS OF SERVICE OPTIONS

PRESS [COS DEFINE] DIAL COS NUMBER 1-16 TO CHANGE ANY OPTION FOR A COS 1-16 | PRESS [OPTION] DIAL OPTION NUMBER 33-101 PRESS [ADD] TO ENABLE OR PRESS [DELETE] TO REMOVE

REPEAT FOR EACH OPTION IN THE COS

OPTION NO.	1	2	3	4	5	6	7	8	9	10	11	12	13	14	15	16	OPTION NO.	OPTION NAME
77																	77	MESSAGE WAITING APPLIES
78																	78	ROOM DO NOT DISTURB ENABLE
79																	79	CALL HOLD AND RETRIEVE ACCESS
80																	80	ROOM STATUS APPLIES
81																	81	CALL FORWARDING SYSTEM INHIBIT
82																	82	ALARM CALL ENABLE
83																	83	FORCED ACCOUNT CODE ENTRY
84																	84	NO SMDR RECORD APPLIES
85																	85	SPEED CALL TABLE 1&2 ACCESS
86																	86	SPEED CALL TABLE 3&4 ACCESS
87																	87	SPEED CALL TABLE 5&6 ACCESS
88																	88	SPEED CALL TABLE 7&8 ACCESS
89																	89	SPEED CALL TABLE 9&10 ACCESS
90																	90	SPEED CALL TABLE 11&12 ACCESS
91																	91	SPEED CALL TABLE 13&14 ACCESS
92																	92	SPEED CALL TABLE 15&16 ACCESS
93																	93	SPEED CALL TABLE 17&18 ACCESS
94																	94	CANNOT DIAL A TRUNK AFTER FLASHING
95																	95	INCOMING TRUNK ROTARY DIAL ONLY
96																	96	ARS RESTRICTED
97																	97	EXTERNAL CALL FORWARDING ENABLE
98																	98	TRANSFER WITH PRIVACY
99																	99	HANDS - FREE STATION
100																	100	ARS ALLOWED
101																	101	EARTH GROUND BUTTON

PRESS [ENTER] TO ENTER ALL INFORMATION IN THAT COS AFTER ALL OPTIONS IN THAT COS HAVE BEEN DEFINED

TO REVIEW THE OPTIONS WITHIN A COS [COS DEFINE] DIAL COS NUMBER [OPTION] [NEXT] [NEXT]

NOTES YOU CANNOT CHANGE AN EXTENSION OR TRUNK IF THE EXTENSION OR TRUNK IS BUSY, HAS MESSAGE WAITING OR DO NOT DISTURB SET. IT ALSO CANNOT BE CHANGED UNLESS MESSAGE REGISTER IS CLEARED.

MITEL

EXTENSION RANGE PROGRAMMING

TO ENTER EXTENSION RANGE PROGRAMMING PRESS [RANGE]

TENANT NUMBER									
NAME	[EQPT NUMBER] DIAL FIRST EQPT NUMBER DIAL * DIAL LAST EQPT NUMBER NOTE 1	[EXTN NUMBER] DIAL FIRST CODE OF RANGE OR SEE NOTES 2,3 OR 4	[COS NUMBER] DIAL COS 1-16 FOR RANGE	[TOLL DENY] [ADD] OR DIAL COR CODE 1,2,OR 3 OR [TOLL ALLOW NOTE 5] [DELETE]	[BUSY LAMP NUMBER] DIAL FIRST BUSY LAMP 1 200 OR [DELETE]	[PICKUP GROUP] DIAL 1-30 FOR RANGE OR [DELETE]	[ENTER]		

NOTES

1. 001 - 161 SX 200 & SX-100 161 - 256 APPLIES TO SX 200 ONLY
2. TO ASSIGN NON CONFLICTING SINGLE DIGIT DIRECTORY NUMBER ENTER N9
3. TO REMOVE EXTENSION PROGRAMMING:

[EXTN] [EQPT NUMBER] FINAL EQUIPMENT NUMBER [EXTN NUMBER] [DELETE] EXTENSION MUST BE REMOVED FROM ANY HUNT GROUP BEFORE REMOVING THE EXTENSION PROGRAMMING!

4. TO SEE THE NEXT EQPT NUMBER AS AN EXTENSION

[EQPT NUMBER] [NEXT]

5. COR 1-3 APPLIES ONLY, IF TOLL CONTROL IS USED

MITEL

HUNT GROUPS

IF TENANT SERVICE IS IN USE
ALL ENTRIES MADE ARE ASSIGNED TO THE TENANT NUMBER DIALED

TENENT | DIAL 1-4 | ENTER

HUNT GROUP (EXTENSIONS OR TRUNK INFORMATION MUST BE ENTERED BEFORE TRUNK GROUP DATA)

TENANT NUMBER	

HUNT GROUP DIAL 1-12	ACCESS CODE / DIAL CODE OR DELETE	PRESS EQPT NUMBER BEFORE DIALING EACH EQUIPEMENT NUMBER ENTRY — ENTER												

TO SEE EQUIPEMENT NUMBERS CURRENTLY IN A HUNT GROUP

HUNT GROUP | DIAL NUMBER 1-12 | EQPT NUMBER | NEXT | NEXT

TO SEE ALL HUNT GROUPS

HUNT GROUP | NEXT | NEXT

TO MAKE A CHANGE TO A HUNT GROUP, THE LIST OF MEMBERS MUST BE RE ENTERED, IN DIVIDUAL MEMBERS CANNOT BE DELETED OR CHANGED. THE EXISTING GROUP LIST IS AUTOMATICALLY DELETED WHEN YOU START TO ENTER A NEW ONE

FOR CIRCULAR HUNT GROUPS FIRST AND LAST NUMBERS MUST BE IDENTICAL

MITEL

NON DIAL-IN TRUNKS

IF TENANT SERVICE IS IN USE
ALL ENTRIES MADE ARE ASSIGNED TO THE TENANT NUMBER DIALED [TENANT] DIAL 1-4 [ENTER]

TO ENTER TRUNK PROGRAMAMMING PRESS [TRUNK]

TENANT NUMBER										
LDN NUMBER	[EQPT NUMBER] DIAL 10-112 OR 162-256 (SEE NOTES 1,2 AND 7)	(SEE NOTE 3) [TYPE] DIAL 1, 5, 11 51 OR [DELETE]	LDN NUMBER DIAL 1-4	(SEE NOTE 4) [DAY NUMBER] DIAL #0-#3 OR *1-*12 OR 1-112 OR 161-256	(SEE NOTE 4) [NIGHT 1] DIAL #0-#3 OR *11-*12 OR 1-112 OR 161-256	(SEE NOTE 4) [NIGHT 2] DIAL #0-#3 OR *1-*12 OR 1-112 OR 161-256	[BUSY LAMP NUMBER] DIAL 1-200 [DELETE]	[ENTER]		
~~2~~	092	1	2	#0	#1	#2	173			

NOTES

1. EQUIPMENT NUMBERS 162-256 APPLY TO SX 200 ONLY

2. ONLY EVEN EQUIPMENT NUMBERS MAY BE ASSIGNED TO TRUNKS

3. TYPE 1 = STANDARD BOTHWAY CO TRUNK VNL
TYPE 5 = NON DIAL IN TIE TRUNK (NON COI VNL
TYPE 11 = STANDARD BOTHWAY CO TRUNK NON VNL
TYPE 51 NON DIAL IN TIE TRUNK (NON COI NON VNL

4. #0 - CONSOLE ONLY
#1 - CONSOLE AND NIGHT BELL 1
#2 - CONSOLE AND NIGHT BELL 2
#3 - CONSOLE AND NIGHT BELL 3

5. TO REMOVE A TRUNK ASSIGNMENT:
(NOTE: TRUNK MUST FIRST BE REMOVED FROM TRUNK GROUP)
[EQPT NUMBER] DIAL EQUIPMENT NUMBER [TYPE] [DELETE] [ENTER]

6. TO SEE THE NEXT EQUIPMENT NUMBER PROGRAMMED AS A TRUNK:
[EQPT NUMBER] [NEXT]

7. SLOT 1 SHOULD CONTAIN A LINE CARD SO FIRST TRUNK EQUIPMENT NUMBER SHOULD BE 010

*1-*12 ASSIGNS THE TRUNK TO THE HUNT GROUP SELECTED
1-112, 161-256 ASSIGNS THE TRUNK TO THE SPECIFIED EXTENSIONS

DIAL-IN TRUNKS

IF TENANT SERVICE IS IN USE
ALL ENTRIES MADE ARE ASSIGNED TO THE TENANT NUMBER DIALED

[TENANT] DIAL 1-4 [ENTER]

TO ENTER TRUNK PROGRAMING PRESS [TRUNK]

TENANT NUMBER

LDN NUMBER	[EQPT NUMBER] DIAL 10-112 OR 162-256 (SEE NOTES 1,2 AND 7)	SEE NOTE 3 [TYPE] DIAL 2,4,21 OR 41 OR [DELETE]	[COS NUMBER] DIAL 1-16	TOLL DENY [ADD] [TOLL DENY] OR DIAL COR CODE 1,2, OR 3 OR [DELETE] TOLL ALLOW NOTE 6	[BUSY LAMP NUMBER] DIAL 1-200 CONSOLES [DELETE]	[ENTER]

NOTES

1. EQUIPMENT NUMBERS 162-256 APPLIES TO SX-200 ONLY

2. EVEN EQUIPMENT NUMBERS ONLY MAY BE ASSIGNED TO TRUNKS

TYPE 2 - DIRECT INWARD SYSTEM ACCESS VNL
TYPE 4 - DIAL IN TIE TRUNK (NON CO) VNL
TYPE 21 - DIRECT INWARD SYSTEM ACCESS NON VNL
TYPE 41 - DIAL IN TIE TRUNK (NON CO) NON VNL

6. COR 1,3 APPLIES ONLY IF MULTI DIGIT TOLL CONTROL IS USED
7. SLOT 1 SHOULD CONTAIN A LINE CARD SO FIRST TRUNK EQUIPMENT NUMBER SHOULD BE 010

4. TO REMOVE A TRUNK ASSIGNMENT
NOTE TRUNK MUST FIRST BE REMOVED FROM TRUNK GROUP

[EQPT NUMBER] DIAL EQUIPMENT NUMBERS [TYPE] [DELETE]

5. TO SEE THE NEXT EQUIPMENT NUMBER ASSIGNED AS A TRUNK

[EQPT NUMBER] [NEXT]

MITEL

DID/CCSA TRUNKS

IF TENANT SERVICE IS IN USE
ALL ENTRIES MADE ARE ASSIGNED TO THE TENANT NUMBER DIALED [TENANT] DIAL 1-4 [ENTER]

TO ENTER TRUNK PROGRAMMING PRESS [TRUNK]

TENANT NUMBER		SEE NOTES 3					DIAL 1-200	
LCN NUMBER	[EQPT NUMBER] DIAL 10-110 OR 162-254 (SEE NOTES 1,2 AND 7)	[TYPE]	DIAL 3,6 31 OR 61 [DELETE]	[I/C] N	DIAL NMX CODE (NOTE 4) M	X	[BUSY LAMP NUMBER] [DELETE]	[ENTER]

NOTES:

1. EQUIPMENT NUMBERS 162-254 APPLY TO SX-200 ONLY
2. ALTERNATE EVEN NUMBERS ONLY MAY BE ASSIGNED TO DID/CCSA TRUNKS
3. TYPE 3 = DID VNL
   TYPE 31 = DID NON VNL
   TYPE 6 = CCSA VNL
   TYPE 61 = CCSA NON VNL
4. N = NUMBER OF DIGITS TO BE RECEIVED AFTER TRUNK IS SEIZED (1-9)
   M = NUMBER OF DIGITS TO BE ABSORBED AFTER TRUNK IS SEIZED (0-8)
   X = LEADING DIGIT TO BE INSERTED, IF REQUIRED
   MAXIMUM NUMBER OF DIGITS IS 4 (3 IF TENANT SERVICE) AFTER ABSORPTION (M) AND ADDING A DIGIT (X).
5. TO REMOVE A TRUNK ASSIGNMENT: (TRUNK MUST FIRST BE REMOVED FROM TRUNK GROUP)
   [EQPT NUMBER] [TYPE] [DELETE]
6. TO SEE THE NEXT EQPT NUMBER ASSIGNED AS A TRUNK
7. SLOT 1 SHOULD CONTAIN A LINE CARD, SO FIRST TRUNK EQUIPMENT NUMBER SHOULD BE 010
   [EQPT NUMBER] [NEXT]

TRUNK GROUPS

IF TENANT SERVICE IS IN USE
ALL ENTRIES MADE ARE ASSIGNED TO THE TENANT NUMBER DIALED

TENANT | DIAL 1-4 | ENTER

TO ENTER TRUNK GROUP PROGRAMMING PRESS

TRUNK GROUP (TRUNK INFORMATION MUST BE ENTERED BEFORE TRUNK GROUP DATA)

TENANT NUMBER																		
TRUNK GROUP	DIAL 1-12	ACCESS CODE	DIAL CODE OR DELETE	TYPE SEE NOTE 6				TOLL DENY NOTE 8	ADD OR DELETE	OVFLO GROUP NOTE 5	DIAL 1-12 OR DELETE	SEE NOTE 4 AND 7 PRESS EQPT NUMBER BEFORE DIALING EACH EQUIPMENT NUMBER ENTRY AFTER LAST ENTRY PRESS ENTER								
				1ST DIGIT	2ND DIGIT	3RD DIGIT	4TH DIGIT												

NOTES

1. TO SEE THE TRUNKS IN A TRUNK GROUP — TRUNK GROUP | DIAL NUMBER (1-12) | EQPT NUMBER | NEXT | NEXT

2. TO SEE ALL TRUNK GROUPS — TRUNK GROUP | NEXT | NEXT

3. TO DELETE TRUNK GROUP — TRUNK GROUP | DIAL NUMBER (1-12) | ACCESS CODE | DELETE | ENTER

3. TO MAKE A CHANGE TO A TRUNK GROUP, THE LIST OF MEMBERS MUST BE RE-ENTERED. INDIVIDUAL MEMBERS CANNOT BE DELETED OR CHANGED. THE EXISTING TRUNK GROUP LIST IS AUTOMATICALLY DELETED WHEN YOU START TO ENTER A NEW ONE

5. ORIGINAL AND OVERFLOW TRUNK GROUPS MUST BE THE SAME TYPE AND HAVE THE SAME TOLL RESTRICTION CHARACTERISTICS

6. TRUNK GROUP TYPE IS 4 DIGITS

1ST DIGIT
1-NO SUPERVISION
2-ANSWER SUPERVISION
3-TOLL REVERSAL
4-OUTGOING AUDIO INHIBITED UNTIL ANSWER SUPERVISION TIMEOUT OR #DIALED

2ND DIGIT
1-NO MESSAGE REGISTER
2-MESSAGE REGISTER
3-SMDR WITHOUT MESSAGE REGISTER
4-SMDR WITH MESSAGE REGISTER

3RD DIGIT
1-ROTARY DIAL OFFICE, NO WAIT FOR DIAL TONE
2-ROTARY DIAL OFFICE, WAIT FOR DIAL TONE
3-TOUCH TONE DIALOFFICE, NO WAIT FOR DIAL TONE
4-TOUCH TONE DIAL OFFICE, WAIT FOR DIAL TONE

4TH DIGIT
1-CENTRAL OFFICE
2-NON-CO
3-IDENTIFIED TRUNK GROUP (NON-CO)

7. THE TRUNKS WITHIN A TRUNK GROUP MAY BE PROGRAMMED FOR EITHER TERMINAL OR CIRCULAR HUNTING. IF TERMINAL HUNTING IS REQUIRED ENTER TRUNK EQUIPMENT NUMBERS IN REQUIRED SEQUENCE

IF CIRCULAR HUNTING IS REQUIRED MAKE LAST TRUNK EQUIPMENT NUMBER THE SAME AS THE FIRST TRUNK EQUIPMENT NUMBER

9. USE OF TOLL DENY KEY DOES NOT APPLY IF TOLL CONTROL ISUSED

SEE SECTION MITL9105/9110-097-212-NA OR TOLL CONTROL FORMS THIS SECTION.

MITEL

TRUNK CARD SWITCH SETTINGS - CO TRUNK CARDS

	CO DIRECTORY NO.	SELF NO.		CARD TRUNK NUMBER	TRUNK EQPT NUMBER	INCOMING CONDITION		OUTGOING CONDITION		LOOP/GND START		3RD WIRE CONDITION		SENSE REVERSALS		RELEASE TIME				M/B RATIO		XT		HI-Z	
																"B" SHRT		"B" LONG							
		1	2			BUSY	IDLE	BUSY	IDLE	LOOP	GND	ENAB	DIS	IGN	EFF	"A" SHRT	"A" LONG	"A" SHRT	"A" LONG	33/66	40/60	GND	-48V	HI-Z	NORM
CARD SLOT NO.				1																					
				2																					
				3																					
				4																					
CARD SLOT NO.				1																					
				2																					
				3																					
				4																					
CARD SLOT NO.				1																					
				2																					
				3																					
				4																					
CARD SLOT NO				1																					
				2																					
				3																					
				4																					
CARD SLOT NO.				1																					
				2																					
				3																					
				4																					

NOTES

1. EARLIER TRUNK CARD VERSIONS DO NOT HAVE ALL SWITCHES LISTED ABOVE.
2. CHECK APPROPRIATE COLUMN E.G. "BUSY" OR "IDLE" FOR DESIRED SETTING.
3. SEE SECTION MITL9105/9110-097-200-NA APPENDIX 5 FOR PROCEDURES USED IN SETTING TRUNK CARD SWITCHES.

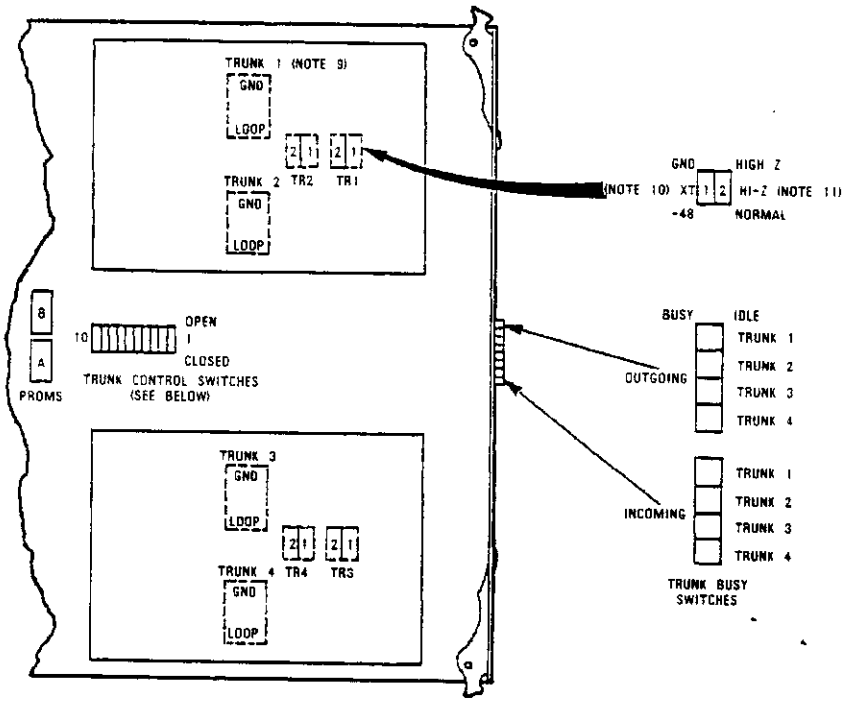

TRUNK CONTROL SWITCH FUNCTIONS

SWITCH NO.	FUNCTION	TYPE -211	TYPE -311
1	3RD WIRE TRUNK 1	X	X
2	3RD WIRE TRUNK 2	X	X
3	3RD WIRE TRUNK 3	X	X
4	3RD WIRE TRUNK 4	X	X
5	IGNORE REVERSALS	X	X
6	RELEASE TIME "A"	X	X
7	MAKE/BREAK RATIO	-	X
8	RELEASE TIME "B"	X	X
9	NOT USED	-	-
10	NOT USED	-	-

"X" INDICATES THAT FUNCTION STATED IS APPLICABLE FOR THE TYPE 9110-211-000 OR -311-000 TRUNK CARDS; AS NOTED UNDER THE COLUMN HEADINGS.

X1266R4

CO Trunk Card

TRUNK CARD SWITCH SETTINGS - E AND M/TIE TRUNK CARD

CIRCUIT REFERENCE NUMBER _____

TRUNK 1 _____

TRUNK 2 _____

CARD SLOT NUMBER _____

SHELF NUMBER _____

EQPT NUMBER _____

TRUNK CARD (NOTE 1) SWITCH SETTINGS		TRUNK 1	TRUNK 2
EQPT NUMBER			
INCOMING CONDITIONS	BUSY		
	IDLE		
OUT GOING CONDITIONS	BUSY		
	IDLE		
OUTGOING WINK	WINK		
	NO WINK		
INCOMING WINK	WINK		
	NO WINK		
2/4 WIRE CONDITIONS	2 WIRE		
	4 WIRE		
GAIN	SPECIAL		
	NORMAL		
TRUNK IMPEDANCE	600 OHM		
	900 OHM		
LOOP CONDITION	SHORT		
	LONG		
DIALING CONDITION	STOP DIAL		
	NOT STOP DIAL		
M-LEAD CONDITION	NORMAL		
	INVERT		

CIRCUIT REFERENCE NUMBERS _____

TRUNK 1 _____

TRUNK 2 _____

CARD SLOT NUMBER _____

SHELF NUMBER _____

EQPT NUMBER _____

TRUNK CARD (NOTE 1) SWITCH SETTING		TRUNK	TRUNK 2
EQPT NUMBER			
INCOMING CONDITIONS	BUSY		
	IDLE		
OUTGOING CONDITIONS	BUSY		
	IDLE		
OUTGOING WINK	WINK		
	NO WINK		
INCOMING WINK	WINK		
	NO WINK		
2/4 WIRE CONDITIONS	2 WIRE		
	4 WIRE		
GAIN	SPECIAL		
	NORMAL		
TRUNK IMPEDANCE	600 OHM		
	900 OHM		
LOOP CONDITION	SHORT		
	LONG		
DIALING CONDITION	STOP DIAL		
	NOT STOP DIAL		
M-LEAD CONDITION	NORMAL		
	INVERT		

NOTES: 1 TRUNK CARD SWITCHES MUST BE SET TO ONE OF THE TWO POSSIBLE SETTINGS FOR EACH SWITCH AS DETAILED IN SECTION MITL9105/9110-097-200-NA APPENDIX S MAP 200-502

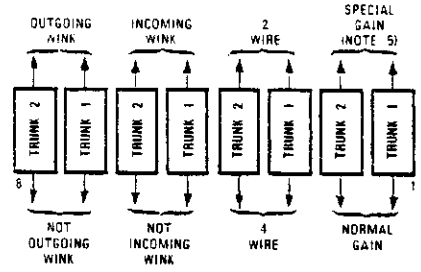

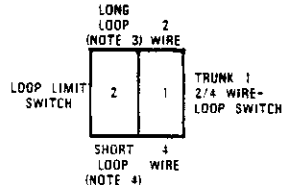

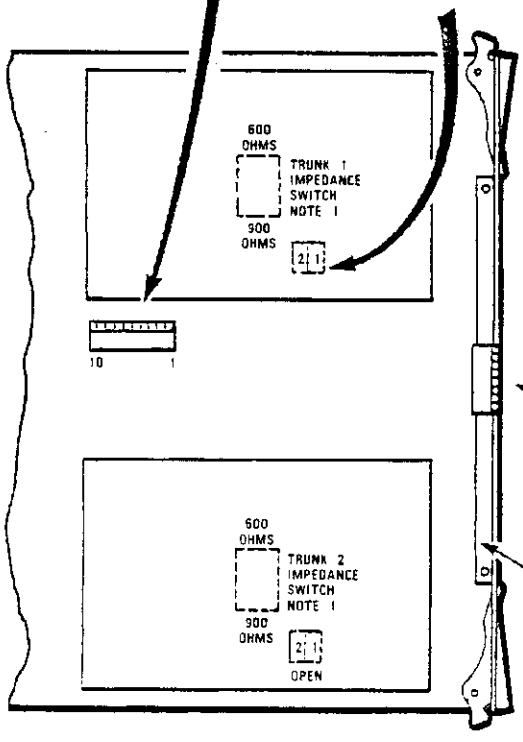

NOTE 1: TRUNK IMPEDANCE SWITCHES ARE LOCATED ON THE REAR OF THE FACE OF THE TRUNK CARD.

NOTE 2: OUTGOING/INCOMING SWITCH SETTINGS

OUTGOING BUSY SWITCH SET TO	INCOMING BUSY SWITCH SET TO	RESULT
IDLE	BUSY	NORMAL TRUNK OPERATION - IF TRUNK IS MADE BUSY BY ATTENDANT, OUTGOING BUSY, INCOMING BUSY CONDITION RESULTS. SEE BELOW.
BUSY	BUSY	TRUNK CANNOT BE SEIZED, INCOMING OR OUTGOING FROM THE PABX. RECOMMENDED SETTING IF TRUNK IS NOT CONNECTED TO TRUNK CIRCUIT.
BUSY	IDLE	OUTGOING CALLS RECEIVE BUSY TONE. INCOMING CALLS RECEIVE RINGING TONE BUT CANNOT BE ANSWERED.
IDLE	IDLE	IF TRUNK IS MADE BUSY BY ATTENDANT, OUTGOING BUSY, INCOMING IDLE CONDITION RESULTS. SEE BELOW.

INCOMING BUSY SWITCH, WHEN OPERATED, WILL PROVIDE AN OUTGOING SEIZE SIGNAL WHENEVER THE TRUNK IS MADE OUTGOING BUSY (EITHER FROM THE OUTGOING BUSY SWITCH ON THE TRUNK, OR FROM THE CONSOLE).

NOTE 3: LONG LOOP SETTING AT LOOP LIMIT SWITCH RESULTS IN 10 OHM RESISTANCE IN SERIES WITH M LEAD

NOTE 4: SHORT LOOP SETTING OF LOOP LIMIT SWITCH RESULTS IN 110 OHM RESISTANCE IN SERIES WITH M LEAD

NOTE 5: NORMAL GAIN PROVIDES 0.5 dB INSERTION LOSS THROUGH THE PABX. SPECIAL GAIN PROVIDES FOR 4-WIRE OPERATION WITH CARRIER SYSTEMS REQUIRING SIGNAL LEVELS OF +7 dB ON THE Rx PAIR, AND -16 dB ON THE Tx PAIR.

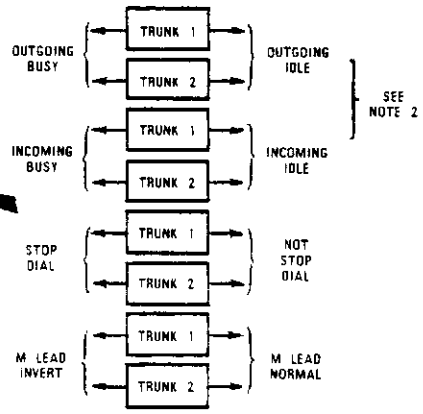

X186R2

E and M Trunk Card Switch Settings

TRUNK CARD SWITCH SETTINGS - E AND M/TIE TRUNK CARD

CIRCUIT REFERENCE NUMBER _____

TRUNK 1 _____

TRUNK 2 _____

CARD SLOT NUMBER _____

SHELF NUMBER _____

EQPT NUMBER _____

TRUNK CARD (NOTE 1) SWITCH SETTINGS		TRUNK 1	TRUNK 2
EQPT NUMBER			
INCOMING CONDITIONS	BUSY		
	IDLE		
OUT GOING CONDITIONS	BUSY		
	IDLE		
OUTGOING WINK	WINK		
	NO WINK		
INCOMING WINK	WINK		
	NO WINK		
2/4 WIRE CONDITIONS	2 WIRE		
	4 WIRE		
GAIN	SPECIAL		
	NORMAL		
TRUNK IMPEDANCE	600 OHM		
	900 OHM		
LOOP CONDITION	SHORT		
	LONG		
DIALING CONDITION	STOP DIAL		
	NOT STOP DIAL		
M-LEAD CONDITION	NORMAL		
	INVERT		

CIRCUIT REFERENCE NUMBERS _____

TRUNK 1 _____

TRUNK 2 _____

CARD SLOT NUMBER _____

SHELF NUMBER _____

EQPT NUMBER _____

TRUNK CARD (NOTE 1) SWITCH SETTING		TRUNK	TRUNK 2
EQPT NUMBER			
INCOMING CONDITIONS	BUSY		
	IDLE		
OUTGOING CONDITIONS	BUSY		
	IDLE		
OUTGOING WINK	WINK		
	NO WINK		
INCOMING WINK	WINK		
	NO WINK		
2/4 WIRE CONDITIONS	2 WIRE		
	4 WIRE		
GAIN	SPECIAL		
	NORMAL		
TRUNK IMPEDANCE	600 OHM		
	900 OHM		
LOOP CONDITION	SHORT		
	LONG		
DIALING CONDITION	STOP DIAL		
	NOT STOP DIAL		
M-LEAD CONDITION	NORMAL		
	INVERT		

NOTES 1. TRUNK CARD SWITCHES MUST BE SET TO ONE OF THE TWO POSSIBLE SETTINGS FOR EACH SWITCH AS DETAILED IN SECTION MITL9105/9110-097-200-NA APPENDIX 5 MAP 200-502

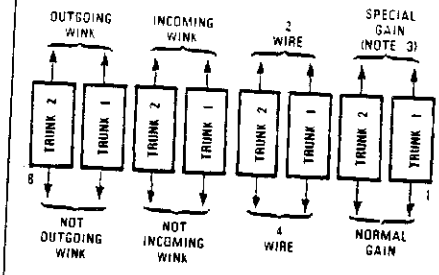

NOTE 1: TRUNK IMPEDANCE SWITCHES ARE LOCATED ON THE REAR FACE OF THE TRUNK CARD.

NOTE 2: OUTGOING/INCOMING SWITCH SETTINGS

OUTGOING BUSY SWITCH SET TO	INCOMING BUSY SWITCH SET TO	RESULT
IDLE	BUSY	NORMAL TRUNK OPERATION - IF TRUNK IS MADE BUSY BY ATTENDANT OUTGOING BUSY, INCOMING BUSY CONDITION RESULTS. SEE BELOW.
BUSY	BUSY	TRUNK CANNOT BE SEIZED INCOMING OR OUTGOING FROM THE PABX. RECOMMENDED SETTING IF TRUNK IS NOT CONNECTED TO TRUNK CIRCUIT.
BUSY	IDLE	OUTGOING CALLS RECEIVE BUSY TONE. INCOMING CALLS RECEIVE RINGING TONE BUT CANNOT BE ANSWERED.
IDLE	IDLE	IF TRUNK IS MADE BUSY BY ATTENDANT, OUTGOING BUSY INCOMING IDLE CONDITION RESULTS. SEE BELOW.

INCOMING BUSY SWITCH, WHEN OPERATED WILL PROVIDE AN OUTGOING SEIZE SIGNAL WHENEVER THE TRUNK IS MADE OUTGOING BUSY (EITHER FROM THE OUTGOING BUSY SWITCH ON THE TRUNK OR FROM THE CONSOLE).

NOTE 3: NORMAL GAIN PROVIDES 0.5 dB INSERTION LOSS THROUGH THE PABX. SPECIAL GAIN PROVIDES FOR 4-WIRE OPERATION WITH CARRIER SYSTEMS REQUIRING SIGNAL LEVELS OF +7 dB ON THE Rx PAIR, AND -16 dB ON THE Tx PAIR.

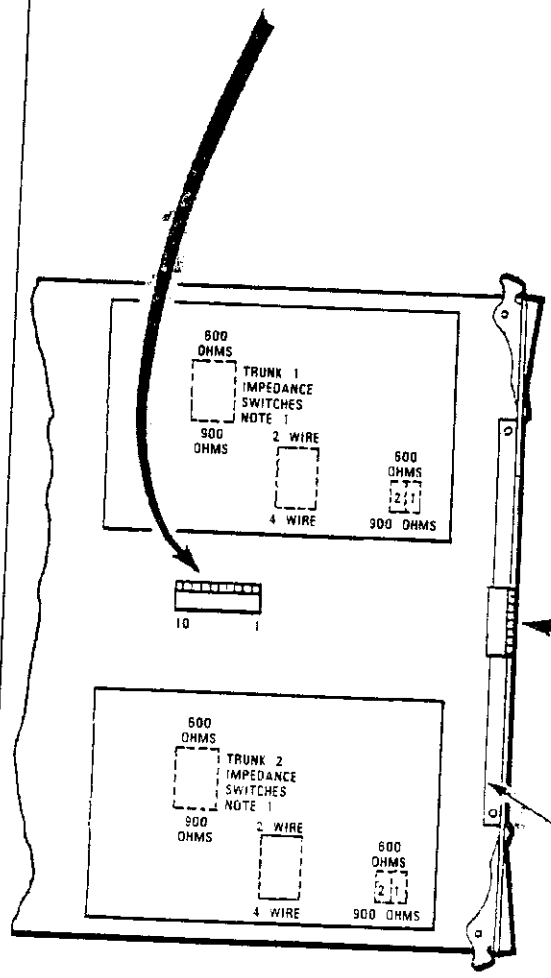

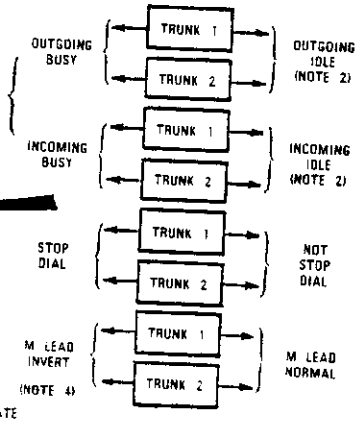

NOTE 4: THE POSITION OF THE M LEAD SWITCH DETERMINES THE CONDITION WHICH APPEARS ON THE M LEAD. THESE CONDITIONS ARE AS FOLLOWS:

SWITCH POSITIONS	CONDITIONS	
	IDLE	SEIZED
NORMAL	GROUND	- 48 Vdc
INVERT	- 48 Vdc	GROUND

X623R3

E and M Trunk Card Switch Settings

TRUNK CARD SWITCH SETTING - DID/TIE TRUNK CARD

CIRCUIT REFERENCE NUMBERS
TRUNK 1 .....
TRUNK 2 .....
SHELF NUMBER .....
CARD SLOT NUMBER .....
TRUNK CARD .....

SWITCH SETTINGS		TRUNK 1	TRUNK 2
EQPT NUMBER			
INCOMING CONDITIONS	BUSY		
	IDLE		
OUTGOING CONDITIONS	BUSY		
	IDLE		
SWITCH "A" SETTING	CLOSED		
	OPEN		
SWITCH "B" SETTING	CLOSED		
	OPEN		
INCOMING WINK	WINK		
	NO WINK		
OUTGOING WINK	WINK		
	NO WINK		
TRUNK IMPEDANCE SWITCHES (3)	900		
	600		
PULSING CONDITION	BATTERY/GROUND		
	LOOP		
DIALING CONDITIONS	STOP DIAL		
	NOT STOP DIAL		

CIRCUIT REFERENCE NUMBERS
TRUNK 1 .....
TRUNK 2 .....
SHELF NUMBER .....
CARD SLOT NUMBER .....
TRUNK CARD .....

SWITCH SETTINGS		TRUNK 1	TRUNK 2
EQPT NUMBER			
INCOMING CONDITIONS	BUSY		
	IDLE		
OUTGOING CONDITIONS	BUSY		
	IDLE		
SWITCH "A" SETTING	CLOSE		
	OPEN		
SWITCH "B" SETTING	CLOSED		
	OPEN		
INCOMING WINK	WINK		
	NO WINK		
OUTGOING WINK	WINK		
	NO WINK		
TRUNK IMPEDANCE SWITCHES (3)	900		
	600		
PULSING CONDITION	BATTERY/GROUND		
	LOOP		
DIALING CONDITIONS	STOP DIAL		
	NOT STOP DIAL		

NOTES: 1. TRUNK CARD SWITCHES MUST BE SET TO ONE POSSIBLE SETTING FOR EACH SWITCH AS DETAILED IN SECTION MITL 9105/9110-097-200-NA APPENDIX 5 MAP 200-8

TABLE 503-1

TRUNK TYPE	SWITCH A	SWITCH B
DID TRUNK	CLOSED	CLOSED
LOOP TIE TRUNK	CLOSED	OPEN
INCOMING DIAL - OUTGOING AUTO	OPEN	CLOSED
NOT USED	OPEN	OPEN

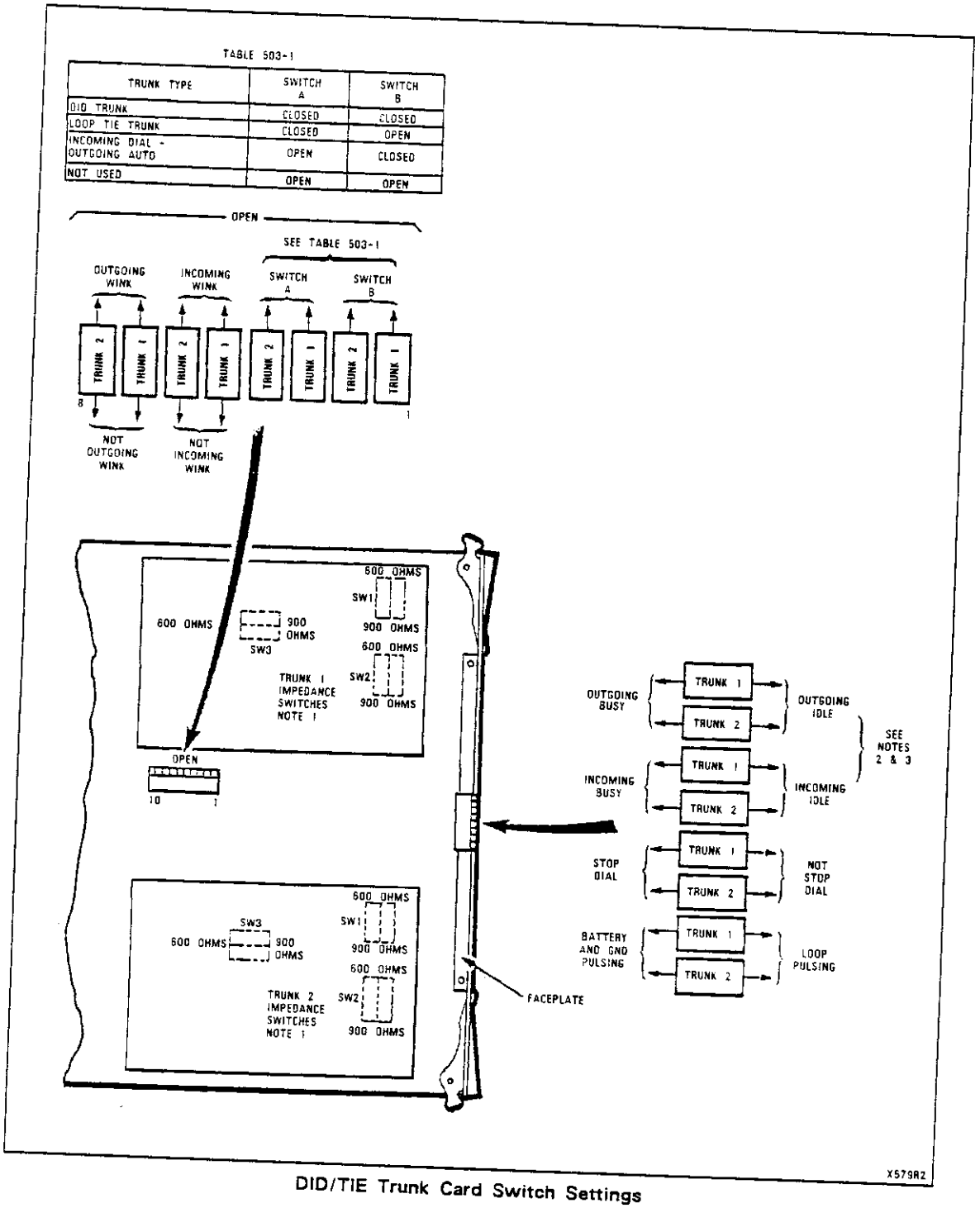

DID/TIE Trunk Card Switch Settings

MULTI DIGIT TOLL CONTROL FORM

GENERIC 216

ABSORB PLAN

TOLL CONTROL

ABSORB PLAN — DIAL 1 OR 2	ABSORB REPEAT — DIAL REPEAT DIGITS (MAX 4) OR DELETE	ABSORB UNLOCK — DIAL UNLOCK DIGITS (MAX 4) OR DELETE	
ABSORB PLAN NUMBER 1			
ABSORB PLAN NUMBER 2			ENTER

TO VIEW THE ABSORB PLANS:

ABSORB PLAN → NEXT → NEXT

PLAN NUMBER 1 DISPLAYED

PLAN NUMBER 2 DISPLAYED

MITEL

CLASS OF RESTRICTION

(TRUNK GROUP)

TOLL CONTROL

TRUNK GROUP — DIAL 1-12	ABSORB PLAN — DIAL 1-2 OR DELETE	COR NUMBER — DIAL 1-3	CONTROL PLAN — DIAL 1-16 OR DELETE	
		1		
		2		
		3		
		1		
		2		
		3		
		1		
		2		
		3		
		1		
		2		
		3		
		1		
		2		
		3		
				ENTER

TO REVIEW CLASS OF RESTRICTION OF A TRUNK GROUP: TRUNK GROUP — DIAL 1-12 — COR — DIAL 1 — DISPLAY ENTRY (COR 1) — NEXT (COR 2) — NEXT (COR 3)

TO SEE NEXT TRUNK GROUP CLASS OF RESTRICTION: TRUNK GROUP — DIAL 1-12 — DISPLAY ENTRY — NEXT

MITEL

CONTROL PLAN

TOLL CONTROL

CONTROL PLAN — DIAL 1-15	DENY TOLL REV — ADD OR DELETE	BASIC COND — DIAL 1-5 (NOTE 2)	ADD OR DELETE (NOTE 1)	TABLE — DIAL 1-9 (800 ENTERY) 21-33 (20 RANGE) 51-73(4 ENTERY) OR DELETE	
		1 (0)			
		2 (1-XNX)			
		3 (1-XO/1X)			
		4 (NNX)			
		5 (NO/1X)			
		1 (0)			
		2 (1-XNX)			
		3 (1-XO/1X)			
		4 (NNX)			
		5 (NO/1X)			
		1 (0)			
		2 (1-XNX)			
		3 (1-XO/1X)			
		4 (NNX)			ENTER
		5 (NO/1X)			

NOTE 1

ADD — ALLOW ALL CODES EXCEPT THOSE LISTED IN THE TABLE SPECIFIED

DELETE — DENY ALL CODES EXCEPT THOSE LISTED IN THE TABLE SPECIFIED

NOTE 2. N IS ANY NUMBER 2-9
X IS ANY NUMBER 0-9

TO REVIEW CONTROL PLAN ASSIGNMENTS

CONTROL PLAN — DIAL 1-15 — DISPLAY ENTTY — NEXT

TO REVIEW THE BASIC CONDITIONS OF THE CONTROL PLAN

CONTROL PLAN — DIAL 1-15 — BASIC COND — DIAL 1 — DISPLAY ENTRY — NEXT — NEXT

DISPLAY BASIC CONDITION 1 — DISPLAY BASIC CONDITION 2 — DISPLAY BASIC CONDITION 3

4 ENTRY EXCEPTION TABLE

FROM BASIC CONDITION____

OR TABLE NUMBER____ CONTROL PLAN____ [TOLL CONTROL]

THIS TABLE LISTS ALL THE CODES THAT ARE ALLOWED ☐

THIS TABLE LISTS ALL THE CODES THAT ARE DENIED ☐

[TABLE] DIAL 51-73 [DISPLAY ENTRY]

PRESS [ADD] BEFORE DIALING EACH ENTRY

IF AN EXPANSION TABLE IS TO BE APPLIED TO THIS ENTRY

[TABLE] DIAL TABLE NUMBER 1-73

TABLE NUMBER				

[ENTER]

TO SEARCH FOR A SPECIFIC ENTRY

[DISPLAY ENTRY] DIAL ENTRY [DISPLAY ENTRY] IF THE ENTRY DOES NOT EXIST DASHES ARE SHOWN IN THE ENTRY DISPLAY

[NEXT] TO DISPLAY THE NEXT ENTRY HAS Y IN THE TABLE AFTER THE ENTRY HAS BEEN SELECTED

TO DELETE THE ENTRY BEING DISPLAYED

[DELETE] [ENTER] NOTE: ANY OPERATIONS MAY BE PREFORMED IN ANY ORDER.

TO DELETE ALL ENTRIES FROM A TABLE

[TABLE] DIAL TABLE NUMBER [DELETE] [CONFIRM] [ENTER]

MITEL

20 RANGE EXCEPTION TABLE

FROM BASIC CONDITION _____

OR TABLE NUMBER _____ CONTROL PLAN _____

TOLL CONTROL

THIS TABLE LISTS ALL THE CODES THAT ARE ALLOWED ☐

THIS TABLE LISTS ALL THE CODES THAT ARE DENIED ☐

TABLE — DIAL 21 33 — DISPLAY ENTRY

PRESS ADD BEFORE DIALING EACH ENTRY

IF A EXPANSION TABLE IS TO BE APPLIED TO THIS ENTRY

TABLE — DIAL TABLE NUMBER 1 73

ENTER

TO SEARCH FOR A SPECIFIC ENTRY

DISPLAY ENTRY — DIAL ENTRY — DISPLAY ENTRY

IF THE ENTRY DOES NOT EXIST DASHES ARE SHOWN IN THE ENTRY DISPLAY

TO DISPLAY THE NEXT ENTRY IN THE TABLE AFTER THE TABLE HAS BEEN SELECTED

NEXT

TO DELETE THE ENTRY BEING DISPLAYED

DELETE — ENTER

NOTE: ANY OPERATIONS MAY BE PERFORMED IN ANY ORDER.

TO DELETE ALL ENTRIES FROM A TABLE

TABLE — DIAL TABLE NUMBER — DELETE — CONFIRM — ENTER

MITEL

800 RANGE EXCEPTION TABLE

FROM BASIC CONDITION_____

OR TABLE NUMBER_____ CONTROL PLAN_____

TOLL CONTROL

THIS TABLE LISTS ALL THE CODES THAT ARE ALLOWED ☐

THIS TABLE LISTS ALL THE CODES THAT ARE DENIED ☐

TABLE DIAL 21 33 DISPLAY ENTRY

PRESS ADD BEFORE DIALING EACH ENTRY

IF A EXPANSION TABLE IS TO BE AFFECTED TO THIS ENTRY

TABLE DIAL TABLE NUMBER 1-24

ENTER

TO SEARCH FOR A SPECIFIC ENTRY

DISPLAY ENTRY DIAL ENTRY DISPLAY ENTRY

IF THE ENTRY DOES NOT EXIST DASHES ARE SHOWN IN THE ENTRY DISPLAY

TO DISPLAY THE NEXT ENTRY IN THE TABLE AFTER THE TABLE HAS BEEN SELECTED

NEXT

TO DELETE THE ENTRY BEING DISPLAYED

DELETE ENTER

NOTE: ANY OPERATIONS MAY BE PERFORMED IN ANY ORDER.

TO DELETE ALL ENTRIES FROM A TABLE

TABLE DIAL TABLE NUMBER DELETE CONFIRM ENTER

MITEL

SPEED CALL FORMS

GENERIC 216

MITEL

SPEED CALL TABLE ALLOCATIONS FORM SC-1

TABLE NUMBER	ENTRY ACCESS NUMBERS		EQPT NUMBER	REDIAL	CLASS OF SERVICE															
	COMMON-USE	PERSONAL			1	2	3	4	5	6	7	8	9	10	11	12	13	14	15	16
1	10-14																			
2	15-19																			
3	20-24																			
4	25-29																			
5	30-34																			
6	35-39																			
7	40-44																			
8	45-49																			
9	50-54																			
10	55-59																			
11	60-64																			
12	65-69																			
13	70-74																			
14	75-79																			
15	80-84																			
16	85-89																			
17	90-94																			
18	95-99																			
19																				
20																				
21																				
22																				
23																				
24																				
25																				

NOTES: 1. STRIKE THROUGH NUMBERS IN COMMON-USE COLUMN, IF TABLE IS TO BE A PERSONAL TABLE, THEN ENTER NEW ENTRY ACCESS NUMBERS IN PERSONAL COLUMN.
2. CHECK IN REMAINING COLUMNS AS REQUIRED IN RESPECT TO EACH TABLE

MITEL

PERSONAL TABLE PROGRAMMING FORM SC-2
(SYSTEM MUST BE IEXTENDED PROGRAMMING

PRESS [SPEED CALL]

[TABLE] DIAL TABLE NO.	[EQPT NUMBER] DIAL EQUIPMENT NO (1 - 112, 161 - 256) OR DELETE	(NOTE 2 & 10) [ACCESS NUMBER] DIAL ACCESS NO.	(NOTE 3) [NUMBER REDIAL] ADD OR DELETE		
1					SEE NOTE 5 TO ENTER DATA
2					
3					
4					
5					
6					
7					
8					
9					
10					
11					
12					
13					
14					
15					
16					
17					
18					
19					
20					
21					
22					
23					
24					
25					

NOTES

1. USE THE ENTRIES MADE ON FORM SC - 1 FOR THE PERSONAL TABLES BY TRANSCRIBING THESE IN TURN TO THEIR RESPECTIVE COLUMNS AGAINST THE SAME TABLE NUMBERS ON FORM SC - 2. COMMON USE TABLES HAVE BLANK ENTRIES.

2. ONLY THE FIRST ACCESS NUMBER FOR EACH PERSONAL TABLE IS REQUIRED TO BE ENTERED THE REMAINING ACCESS NUMBERS ARE AUTOMATALLY ALLOCATED FOR THE TABLE

3. THE SAVED NUMBER REDIAL OPERATION IS INITIALLY OMITTED IF NOT REQUIRED FOR SUB SEQUENT PROGRAMING SEE NOTES 8 &9

4. PERSONAL TABLE DATA IS PROGRAMMED IN EXTENDED PROGRAMING MODE. SEE SECTION MITL9105/9110-097-210 - NA APPENDIX 2 FOR FULL DETAILS

5. THE ENTER BUTTON MAY BE PRESSED AT ANY TIMEENTER DATA, OR PRESSED WHEN ALL DATA IS ENTERED

6. REMOVING A PERSONAL TABLE REMOVES ALL ITS CONTENTS, ACCESS NUMBERS AND REDIAL VALUE (IF ANY)

7. TO REMOVE A PERSONAL TABLE

[SPEED CALL] [TABLE] DIAL TABLE NUMBER [EQPT NUMBER] [DELETE] [ENTER]

8. TO ADD A REDIAL ATTRIBUTE

[SPEED CALL] [TABLE] DIAL TABLE NUMBER [NUMBER REDIAL] [ADD] [ENTER]

9. TO REMOVE A REDIAL ATTRIBUTE

[SPEED CALL] [TABLE] DIAL TABLE NUMBER [NUMBER REDIAL] [DELETE] [ENTER]

10. TO CHANGE A SPEED CALL ACCESS NUMBER

[SPEED CALL] [TABLE] DIAL TABLE NUMBER [ACCESS NUMBER] DIAL NEW ACCESS NUMBER [ENTER]

MITEL

SPEED CALL NUMBER RECORDS FORM SC-3 (Sheet 1 of 4)

(CONFIDENTIAL WHEN COMPLETED)

SPEED CALL FEATURE CODE .....

SPEED CALL NUMBER

Special sequences can be entered at any point in the telephone number listing:

- •1 occupies 1 digit space and causes a 5 sec. pause in use
- •2 occupies 1 digit space and causes a 5 sec. wait for dial tone
- •3NN occupies 2 digit spaces and enables manually dialed digits to be entered
- NN represents the number of digits to be dialed

TABLE	COS	ENTRY ACCESS NUMBER	1 5 10 15 20 25 28	DIGITS USED	DIGITS DIALED 58	CALLED PARTY
1		10				
2		15				
3		20				

LISTING YOUR NUMBERS

1. Tables available for use are indicated on the form by the installer. Your Feature Access Code and Classes of Service also have been entered.
2. Opposite the first available entry access number, write in your first telephone number including the trunk group access code. You can use special sequences (see above).
3. Write in the next entry access number, under the first entry number, using a fresh line and continuing with the next telephone number opposite this second entry number.
4. Complete your list of numbers following the above procedure.

INSTRUCTIONS FOR USER (ATTENDANT)

How to Enter or Change a Number

5. Dial Feature Access Code.
6. Dial 0.
7. Dial entry access number required.
8. Dial telephone number for that entry number.
9. Press the RELEASE button.
10. Repeat the above sequences for each of the remaining entries on the list.

How to Delete a Number

11. Perform Steps 5 through 9 but omit Step 8.

How to Dial a Speed Call Number

12. Dial Feature access code.
13. Dial entry access number.
14. Call proceeds in usual manner.

SEE CONSOLE OPERATING INSTRUCTIONS FOR OTHER DETAILS

P/N 1910-037-012-NA

MITEL

SPEED CALL NUMBER RECORDS FORM SC-3 (Sheet 2 of 4)

(CONFIDENTIAL WHEN COMPLETED)

SPEED CALL FEATURE CODE .....

SPEED CALL NUMBER

Special sequences can be entered at any point in the telephone number listing:

*1 occupies 1 digit space and causes a 5 sec. pause in use
*2 occupies 1 digit space and causes a 5 sec. wait for dial tone
*3NN occupies 2 digit spaces and enables manually dialed digits to be entered
NN represents the number of digits to be dialed

TABLE	COS	ENTRY ACCESS NUMBER	1 5 10 15 20 25 28	DIGITS USED	DIGITS DIALED 56	CALLED PARTY
4		25				
5		30				
6		35				
7		40				
8		45				

MITEL

SPEED CALL NUMBER RECORDS FORM SC-3 (Sheet 3 of 4)

(CONFIDENTIAL WHEN COMPLETED)

SPEED CALL FEATURE CODE .....

SPEED CALL NUMBER

Special sequences can be entered at any point in the telephone number listing:

- •1 occupies 1 digit space and causes a 5 sec. pause in use
- •2 occupies 1 digit space and causes a 5 sec. wait for dial tone
- •3NN occupies 2 digit spaces and enables manually dialed digits to be entered
  NN represents the number of digits to be dialed

TABLE	COS	ENTRY ACCESS NUMBER	1 5 10 15 20 25 28	DIGITS USED	DIGITS DIALED	CALLED PARTY
					56	
9		50				
10		55				
11		60				
12		65				
13		70				

MITEL

SPEED CALL NUMBER RECORDS FORM SC-3 (Sheet 4 of 4)

(CONFIDENTIAL WHEN COMPLETED)

SPEED CALL FEATURE CODE .....

SPEED CALL NUMBER

Special sequences can be entered at any point in the telephone number listing:

*1 occupies 1 digit space and causes a 5 sec. pause in use
*2 occupies 1 digit space and causes a 5 sec. wait for dial tone
*3NN occupies 2 digit spaces and enables manually dialed digits to be entered
NN represents the number of digits to be dialed

TABLE	COS	ENTRY ACCESS NUMBER	1 5 10 15 20 25 28	DIGITS USED	DIGITS DIALED	CALLED PARTY
					58	
14		75				
15		80				
16		85				
17		90				
18		95				

AUTOMATIC ROUTE SELECTION FORMS

GENERIC 216

TABLE ARS 1-1
CONFIGURATION CHARACTERISTICS

CONFIGU-URATIONS	WAKE-UP	MULTI DIGIT TOLL CONTROL	SPEED CALL	AUTOMATIC ROUTE SELECTION	NUMBER OF 800 ENTRY TABLES
1	WU	TC-2	-	ARS 1	1 TO 7
2	-	TC-2	SC1	ARS 1	1 TO 7
3	-	TC-1	SC2	ARS 1	1 TO 7
4	-	TC-3	-	ARS 1	1 TO 7
5	WU	TC-1	-	ARS 2	1 TO 11
6	-	-	SC1	ARS 3	1 TO 22
7	WU	TC-1	SC1	ARS 1	1 TO 7
	WU AUTO-MATIC WAKE-UP	TC-1 BASIC TC-2 STANDARD TC-3 EXTENDED	SC1 STANDARD SC2 EXTENDED	ARS 1 BASIC ARS 2 STANDARD ARS 3 EXTENDED	CONSULT TABLE ARS 1-2 FOR 800/9 TABLE CHARAC-TERISTICS

TABLE ARS 1-2
800/9 ENTRY CODE TABLES

	ARS 1		ARS 2		ARS 3	
NUMBER OF 800 ENTRY TABLES	NUMBER OF 800 ENTRY TABLES	TABLE RANGE	NUMBER OF 9 ENTRY TABLES	TABLE RANGE	NUMBER OF 9 ENTRY TABLE	TABLE RANGE
0	35	1-35	55	1-55	110	1-110
1	30	2-31	50	2-51	105	2-106
2	25	3-28	45	3-47	100	3-102
3	20	4-23	40	4-43	95	4-98
4	15	5-19	35	5-39	90	5-94
5	10	6-15	30	6-35	85	6-90
6	5	7-11	25	7-31	80	7-86
7	0	-	20	8-27	75	8-82
8	-	-	15	9-23	70	9-78
9	-	-	10	10-19	65	10-74
10	-	-	5	11-15	60	11-70
11	-	-	0	-	55	12-66
12	-	-	-	-	50	13-62
13	-	-	-	-	45	14-58
14	-	-	-	-	40	15-54
15	-	-	-	-	35	16-50
16	-	-	-	-	30	17-46
17	-	-	-	-	25	18-42
18	-	-	-	-	20	19-38
19	-	-	-	-	15	20-34
20	-	-	-	-	10	21-30
21	-	-	-	-	5	22-26
22	-	-	-	-	0	-

NOTE 1: AN 800 ENTRY TABLE WILL BE IDENTIFIED BY A PERIOD AFTER THE TABLE NUMBER (IN THE DESTINATION DISPLAY) DURING EXTENDED PROGRAMMING.

THE SYSTEM MUST BE IN EXTENDED PROGRAMMING - LAMP TEST LED FLASHING

CODE TABLE QUANTITY SELECTION FORM ARS-2

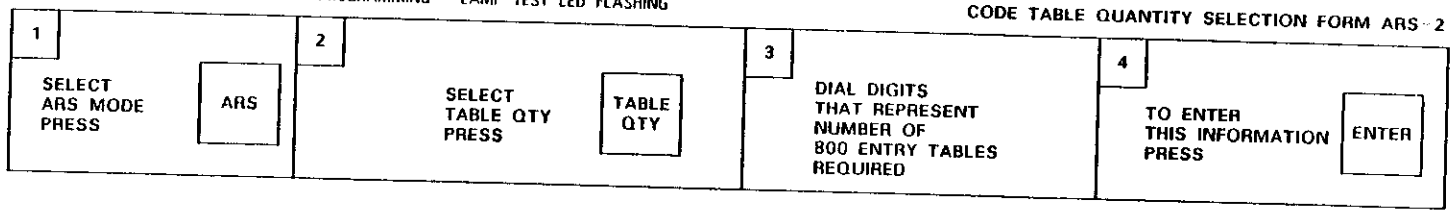

AREA CODE TABLE PROGRAMMING FORM ARS - 3

PRESS [ARS]

PRESS [AREA CODE] DIAL 3 DIGITS	PRESS [ROUTE TABLE] DIAL 1-15 OR DELETE	PRESS [ENTER] NOTE 2

[AREA CODE] DIAL 3 DIGITS	[ROUTE TABLE] DIAL 1-15 OR DELETE	[ENTER] NOTES 2

[AREA CODE] DIAL 3 DIGITS	[ROUTE TABLE] DIAL 1-15 OR DELETE	[ENTER] NOTE 2

1. TO VIEW AN ENTRY

PRESS [AREA CODE] DIAL 3 DIGITS [NEXT] [NEXT]

2. TO DELETE ALL ENTRIES FROM AREA CODE TABLE:

PRESS [AREA CODE] DIAL 3 DIGIT AREA CODE [DELETE] [CONFIRM] [ENTER]

NOTE:
1. ROUTE TABLE 15 IS THE UNIVERSAL ROUTING TABLE I.E. AREA CODE DIGITS NOT ENTERED ARE AUTOMATICALLY IN ROUTE TABLE 15.
2. ENTER BUTTON MAY BE PRESSED AFTER ROUTE TABLE ENTRY OR AFTER ALL ROUTE ENTRIES

MITEL

AREA CODE/ OFFICE CODE PROGRAMMING FORM ARS 4A

PRESS [CODE TABLE] DIAL TABLE NUMBER (NOTE 1)	PRESS [AREA CODE] DIAL 3 DIGIT OR DELETE	PRESS [ROUTE TABLE] DIAL 1-15	PRESS [OFFICE CODE] DIAL 3 DIGIT CODES OR DELETE	DIAL CO CODES	DIAL CO CODES	DIAL CO CODES	DIAL CO CODES	DIAL CO CODES	DIAL CO CODES	DIAL CO CODES	DIAL CO CODES	DIAL CO CODES	DIAL CO CODES	DIAL CO CODES	DIAL CO CODES	PRESS [ENTER] AFTER ALL ENTRIES

AREA CODE/OFFICE CODE PROGRAMMING FORM ARS 4B

FOR LOCAL AREA CODE

LOCAL AREA

DIAL LOCAL AREA CODE

PRESS

ENTER

TO DELETE, ADD OR VIEW FOR ARS 4A

CODE TABLE | DIAL TABLE NUMBER | DELETE | CONFIRM | ENTER

CODE TABLE | DIAL TABLE NUMBER | AREA CODE | DIAL ROUTE TABLE | ROUTE TABLE | DIAL AREA CODE | OFFICE CODE | DIAL 3 DIGITS | DELETE | ENTER

CODE TABLE | AREA CODE | DIAL ROUTE TABLE | ROUTE TABLE | DIAL AREA CODE | OFFICE CODE | DIAL 3 DIGITS | ENTER

TO VIEW OFFICE WIDE TABLE

CODE TABLE | NEXT | NEXT

TO VIEW OFFICE CODE ENTRIES

OFFICE CODE | NEXT | NEXT

MITEL

MODIFY DIGITS PROGRAMMING FORM ARS-5

PRESS [ARS]

PRESS [MODIFY DIGITS]	PRESS [DIGITS DELETE]	PRESS [DIGITS ADD]	PRESS [ENTER]
DIAL 1-12 (NOTE 1)	DIAL 0-10 (NOTE 2)	DIAL ACTUAL DIGITS TO BE ADDED, UP TO A MAXIMUM OF 20 DIGITS (NOTES 3 AND 4)	FOR EACH LINE

NOTES

1. DIAL DIGITS FOR REQUIRED MODIFY DIGITS TABLE
2. DIAL DIGIT REPRESENTING QUANTITY OF DIGITS TO BE DELETED (E.G. 3 FOR AN AREA CODE)
3. TO ADD DIGITS (E.G. ACCESS CODES TO TANDEM SWITCHING EQUIPMENT) DIAL ACTUAL DIGITS TO BE ADDED
4. THE FOLLOWING SPECIAL SEQUENCES MAY BE ADDED WHERE REQUIRED (TO A MAXIMUM OF 4 SEQUENCES PER LINE)
   - *1 - OCCUPIES 1 DIGIT SPACE AND CAUSES A 5S PAUSE AT THAT POINT
   - *2 - OCCUPIES 1 DIGIT SPACE AND CAUSES A WAIT FOR DIAL TONE AT THAT POINT
   - *5 - OCCUPIES 1DIGIT SPACE AND CAUSES A 10S PAUSE AT THAT POINT.

1. TO DELETE A MODIFY DIGIT TABLE

PRESS [MODIFY DIGITS] DIAL 1-12 [DELETE] [ENTER]

2. TO VIEW ALL MODIFY DIGIT TABLES

PRESS [MODIFY DIGITS] [NEXT] [NEXT]

3. TO VIEW ALL DIGITS ADDED IN A MODIFY DIGITS TABLE

PRESS [MODIFY DIGITS] DIAL 1-12 [DIGITS ADD] [NEXT] [NEXT]

4. TO ADD DIGITS TO A MODIFY DIGITS TABLE

PRESS [MODIFY DIGITS] DIAL 1-12 [DIGITS ADD] DIAL ADD DIGITS [ENTER]

MITEL

ROUTE TABLE PROGRAMMING FORM ARS-6 (1 OF 2)

PRESS [ARS]

BASIC SCHEDULE DATA				SCHEDULE CHOICES A			B			C			
PRESS [ROUTE TABLE]	PRESS [ROUTE NUMBER]	PRESS [TRUNK GROUP]	PRESS [MODIFY DIGITS]	PRESS [SCHED A]	PRESS [CHOICE NUMBER]	PRESS [ROUTE NUMBER]	PRESS [SCHED B]	PRESS [CHOICE NUMBERS]	PRESS [ROUTE NUMBER]	PRESS [SCHED C]	PRESS [CHOICE NUMBER]	PRESS [ROUTE NUMBER]	PRESS [ENTER]
DIAL 1-15 OR PRESS DELETE	DIAL 1-4	DIAL 1-12 OR DELETE		DIAL 4 DIGITS OR PRESS DELETE	DIAL 1-4	DIAL 1-4	DIAL 4 DIGITS OR PRESS DELETE	DIAL 1-4	DIAL 1-4	NOTE: 1	DIAL 1-4	DIAL 1-4	AFTER EACH BLOCK
													[ENTER]
													[ENTER]
													[ENTER]

NOTE 1
DO NOT DIAL TIME AFTER PRESSING SCHEDULE C. IT WILL BE IN EFFECT ANY TIME A OR B ARE NOT.

[SCHED C] BUTTON.

MITEL

ROUTE TABLE PROGRAMMING FORM ARS-6 (2 OF 2)

1. TO DELETE A ROUTE TABLE

PRESS [ROUTE TABLE] DIAL 1-15 PRESS [DELETE] [ENTER]

2. TO DELETE A ROUTE NUMBER BEING DISPLAYED

PRESS [DELETE]

OR

PRESS [ROUTE NUMBER] DIAL 1-4 PRESS [DELETE] [ENTER]

3. TO DELETE A ROUTE CHOICE BEING DISPLAYED

PRESS [DELETE]

OR

PRESS [SCHED X] [CHOICE NUMBER] DIAL 1-4 PRESS [DELETE] [ENTER]

(SCHED "X" IS SCHED A, B, OR C)

4. TO VIEW ROUTE TABLES

PRESS [ROUTE TABLE] PRESS [NEXT] [NEXT]

5. TO VIEW ROUTE CHOICES IN A SCHEDULE

PRESS [ROUTE TABLE] DIAL 1-15 [SCHED A] [NEXT]

6. TO VIEW SCHEDULES IN A ROUTE CHOICE:

PRESS [ROUTE TABLE] DIAL 1-15 [SCHEDULE A]

[SCHEDULE B]

[SCHEDULE C]

7. TO VIEW ROUTES TABLES:

PRESS [ROUTE TABLE] DIAL 1-15 [NEXT]

MITEL

SX-100* AND SX-200*
SUPERSWITCH*
ELECTRONIC PRIVATE AUTOMATIC EXCHANGE
SYSTEM PROGRAMMING
GENERIC 216

CONTENTS PAGE

1. GENERAL 2
Introduction 2
Reason for Reissue 2
Purpose 3

2. PROGRAM DESCRIPTION 3
General 3
Tenant Mode 3
System Options 3
Class-of-Service Options 18
Feature Access Codes 18
Extensions 18
Hunt Groups 26
Trunks 27
Trunk Groups 29

3. PROGRAMMING 29
General 29
Error/Confirm Codes 29
Attendant Function Access Codes . . . 29
Maintenance Function Access Codes . 31
Time-Out Information 31

APPENDIX 1 - MITEL ACTION PROCEDURES A1-1

APPENDIX 2 - SYSTEM PROGRAMMING MAP'S A2-1/2
System Programming (MAP210-201) A2-3
Select Programming Mode (MAP210-202) A2-5
Program System Options (MAP210-203) A2-11
Program COS Options (MAP210-204) A2-17
Assign Feature Access Codes (MAP210-205) A2-23
Program Extensions (MAP210-206) A2-27
Program Extension Hunt Groups (MAP210-207) A2-35
Program Non Dial-In Trunks (MAP210-208) A2-41
Program Dial-In Trunks (MAP210-209) A2-51
Program DID Trunks (MAP210-210) A2-59
Program Trunk Groups (MAP210-211) A2-65
Terminating Programming Mode (MAP210-212) A2-73/74
Range Programming For Extensions (MAP210-213) A2-75
Selection of Extended Programming (MAP210-221) A2-79
Absorb Plan (MAP210-222) A2-83
Control Plan (MAP210-223) A2-87
Trunk Group Class of Restriction (MAP210-224) A2-91
Restriction Tables (MAP210-225) A2-95
Add An Entry (MAP210-226) . A2-97/98
Displaying Sequential Entries (MAP210-227) A2-99/100
Search for an Entry (MAP210-228) A2-101/102
Delete an Entry (MAP210-229) A2-103/104
Programming Personal Tables (MAP210-242) A2-105
Convert Table From Personal to Common-Use (MAP210-243) A2-109
Code Table Quantity Selection

Copyright of MITEL Corporation 1981

* Trademark of MITEL Corporation 1981

or Change (MAP210-250) A2-111/112
Area Code Table Programming (MAP210-251) A2-113
Review Area Code Table Programming (MAP210-252) A2-115
Delete an Area Code Table (MAP210-253) A2-117
Area Code/Office Code Programming (MAP210-254) A2-119
Review or Delete Part or All Area Code/Office Code (MAP210-255) A2-123
Program Modify Digits (MAP210-256) A2-127
To Review or Delete Modify Digit Tables (MAP210-257) A2-131
Route Table Programming (MAP210-258) A2-135
To Review or Delete a Route Table (MAP210-259) A2-139
Review or Delete Routes (MAP210-260) A2-143
Terminating Programming (MAP210-274) A2-147/148

1. GENERAL

Introduction

1.01 The SX-100 and SX-200 PABX's are processor-controlled switching systems. In order to process calls, the central processor needs to know certain information about the calling and called equipment. This information is described by blocks of data held in the system memories. A number of service change programs are provided to allow additions, deletions and changes to be made to the equipment configuration. The eight service change programs provided are:

- **Tenant Mode.** Defines whether the system is to be used by single or multi-tenants.
- **System Options.** Describes the options which may be enabled on a system basis.
- **Class-of-Service Options.** Each class of service specifies the features which may be used by stations assigned that Class Of Service (COS). A maximum of sixteen different classes of service may be specified for each system.
- **Feature Access Codes.** A number of features within the system are accessed by dialing a special access code. This program allows the access codes for the features to be defined.
- **Extensions.** This program allows the equipment number, extension number, Class Of Service (features allowed), toll access, busy lamp field assignment and pickup group assignment for each extension to be made.
- **Hunt Groups.** This program allows the extensions within each hunt group to be specified, together with the hunt group master number (access code).
- **Trunks.** This program allows each trunk to be described in terms of the equipment number, trunk type, listed directory number, day and night numbers, busy lamp number, COS and toll access.
- **Trunk Group.** This program allows the trunks within each group to be specified, together with trunk group type, access code and overflow group.

Reason For Reissue

1.02 This Section is reissued to incorporate enhancements to the Generic 216 information for the SX-100 and SX-200 PABX's.

1.03 Other additional service programs, dependent upon the type of software Generic installed in the PABX, may be implemented. These are listed below and include relevant MITEL Practice references, which should be consulted for descriptions and programming requirements.

(a) Traffic Measurement. See Section MITL9105/9110-097-450-NA.

(b) Multi Digit Toll Control. See Section MITL9105/9110-097-212-NA.

(c) Station Message Detail Recording. See Section MITL9105/9110-097-451-NA.

(d) Speed Call. See Section MITL9105/9110-097-220-NA.

(e) Automatic Route Selection. See Section MITL9105/9110-097-213-NA.

Purpose

1.04 This Section consists of four parts, each part explaining a different facet of the system programming.

Part 1 General – general description of system programming contents and purpose of the programming manual.

Part 2 Program Description – a description of each program and definition of each entry and possible response.

Part 3 Programming – this part contains a general introduction to the system programming and MITEL Action Procedures (MAP's) which detail how to use each program. When entering data, the system checks each entry to ensure that the codes entered are correct, and if an error is detected, it sounds the console ringer and displays the required error code. These codes and their meaning are defined in this part.

Part 4 Examples – The examples in this part show how the programs are used to define a typical system.

2. PROGRAM DESCRIPTION

General

2.01 Because the PABX is controlled by a processor, data describing each extension, trunk, feature etc. must be entered into the system. This is done by pressing keys and dialing codes. The codes dialed are held in the system memories and used by the system during call processing. Eight basic programs are provided which allow data to be entered into the system as equipment is added, or existing data to be changed or removed as the system configuration changes. The following paragraphs describe the eight programs (see 1.01). These programs specify the keys to be pressed and explain the entries that may be made. The Appendices to this section contain an introduction to MITEL Action Procedures (MAP's) and the actual MAP's which detail each step in system programming. A complete description of each feature and option is given in Section MITL9105/9110-097-105-NA Features and Services Description. Other types of programs are referenced in 1.03.

Tenant Mode

2.02 The tenant program allows a user to specify the number of the tenant for which entries are to be made. If multi-tenant service is to be selected, the system must be placed in the programming mode, then the TENANT key pressed and the tenant number entered. If single tenant service is required, Tenant mode should not be selected.

System Options

2.03 The system options are selected by the console keys as described below:

- **OPTION.** This key selects the option program which allows the system to set-up or change the active option list. The code entered (Table 2-1) after selecting the option program defines the option to be added or removed from the active option list, but see Table 2-2 for possible option conflicts.

- **ADD.** When pressed, this key adds the option code to the active system option list, making the option available for use by the system.

- **DELETE.** Pressing the DELETE key, after dialing an option code, removes the code from the active option list inhibiting further use of that option.

- **CANCEL.** As entries are made during the option program, they are stored in a temporary memory. If after making a number of entries, an error is discovered, all new entries may be removed by pressing the CANCEL key.

- **ENTER.** After all entries have been made to the system option, they may be moved from the temporary storage to permanent storage by pressing the ENTER key. Additional changes may be made by reentering the option program.

TABLE 2-1
SYSTEM OPTIONS

Option Number	Option	Description
100	Discriminating Ringing	Enables discriminating ringing for trunk and attendant-handled calls.
101	Transfer Dial Tone	Enables transfer dial tone.
102	Flexible Night Service	Enables flexible night service.
103	Night Service Automatic Switching	Enables night service automatic switching.
104	TAFAS Available During Day	Enables TAFAS during day.
105	Outgoing Trunk Camp-On	Allows station camp-on feature to be used on trunks. If station camp-on is not enabled, this option is ineffective on trunks.
106	Outgoing Trunk Callback	Allows busy callback feature to be used on trunks.
107	Can Flash if Talking to an Incoming Trunk	Allows extensions to switchhook flash on incoming trunk calls.
108	Can Flash if Talking to an Outgoing Trunk	Allows extensions to switchhook flash on outgoing trunk calls.
109	Can Flash if Talking to Station	Allows extensions to switchhook flash on extension calls.
110	Cannot Dial a Trunk After Flashing	Inhibits dialing a trunk after flashing. This option does not apply to dialing a trunk for broker's call.
111	Cannot Dial a Trunk After Flashing if Holding or in Conference with a Trunk	Inhibits dialing a trunk after flashing, only if the existing call has a trunk party. This option does not apply to broker's call.
112	Lockout Alarm Enable	Causes a minor alarm when an extension is locked out.
113	Tenant Service	Enables tenant service. This option cannot be programmed like other system options, but is entered automatically, if Tenant Service is selected prior to system programming.
114	Tenant Service - Separate Consoles	Allows the use of a separate console for each of two tenants. If this option is not selected, tenants must share consoles.

TABLE 2-1 (CONT'D)
SYSTEM OPTIONS

Option Number	Option	Description
115	Vacant Number Intercept to Attendant	Causes all calls, other than DID or Dial-In Tie Trunk calls to vacant levels and numbers to be routed to the attendant for intercept. If this option is not selected, such calls will receive re-order tone.
116	Illegal Access Intercept to Attendant	Causes all calls, other than DID or Dial-In Tie Trunk calls to unauthorized access codes, to be routed to the attendant for intercept. If this option is not selected, such calls will receive re-order tone.
117	DID/Dial-In/CCSA Vacant/ Illegal Intercept to Attendant	This option causes calls on DID/Dial-In and CCSA trunk calls that attempt access to a vacant or not allowed number to intercept to the attendant.
118	Attendant Camp-On	Allows attendant camp-on. If this option is not selected, pressing the release button, when attempting to connect a call to a busy station, will release the call. See "Attendant Timed Recall Camp-On" options.
119	Attendant Conference	Allows attendant conference.
120	Attendant Busy Override	Allows attendant override.
121	Attendant Serial Call	Allows attendant serial call. If this option is selected, hotel/motel guest room capability is unavailable, unless the FLASH button is programmed as the SERIAL CALL button (System Option 261).
122	Bell Off Enable	Enables the Bell Off Button. If this option is not selected, the "Bell Off" button is ineffective, i.e., the console ringer cannot be turned off.
123	Page Button Enable	Allows the attendant access to the paging equipment by pressing the PAGE button.
124	New Call Tone Enable	Causes the first incoming call to signal the attendant with a single tone ringer burst, if the attendant is already busy on another call. If the option is not selected, incoming calls which arrive while the attendant is handling another call, will not provide any audible signal, until the attendant releases from that call.
125	Both Mode Standard	Causes the attendant to be normally connected to both the SOURCE and DESTINATION of calls through the console. Manual splitting can be achieved using the SOURCE and DESTINATION buttons. If this option is not selected, the console will operate in an automatic split mode, i.e., the attendant will always be split toward the source upon answering calls, and will be split toward the destination as soon as the destination number is dialed. Manual splitting can still be achieved using the SOURCE and DESTINATION buttons.

TABLE 2-1 (CONT'D)
SYSTEM OPTIONS

Option Number	Option	Description
126	Callback Button Enable	Enables the "Callback" button, i.e. gives the attendant access to the callback feature.
127	Trunk Busy Out Enable	Allows the attendant to "busy out" and "de-busy" individual trunks. If this option is not selected, the attendant will still be able to access individual trunks, but will not be able to busy them out or remove a busy-out condition.
128	Both Button Enable	Enables the "both" button. If this feature is not selected, the attendant will be able to split between source and destination, but will not be able to speak to both source and destination at the same time.
129	Attendant CO Trunk - CO Trunk Connect Enable	Allows the attendant to make CO trunk to CO trunk connections via the console.
130	Attendant CO Trunk - Non-CO Trunk Connect Enable	Allows the attendant to make CO trunk to Non-CO trunk connections via the console.
131	Attendant Non-CO Trunk - Non-CO Trunk	Allows the attendant to connect Non-CO trunks together via the console.
132	Controlled Outgoing Restriction Setup	Enables the "Room Restrict" button, i.e., allows the attendant to set up the controlled outgoing restriction feature. If this feature is selected, Night Service 2 is not available.
133	Controlled Station Restriction Setup	Enables the "Do Not Disturb" button, i.e., allows the attendant to use the controlled station restriction feature.
134	Controlled Station-to-Station Restriction Setup	Enables the Call Block button, i.e., allows the attendant to inhibit calls between stations with the "H/M Station-Station Restrict Applies" feature in their Class of Service. If this feature is selected, Attendant Hold 4 button is unavailable.
135	Attendant DISA Code Setup Enable	Allows the attendant to change the Direct Inward Systems Access (DISA) security code from the console.
136	Limited Wait for Dial Tone	Limits the "wait for dial tone" trunk group option to wait a maximum of 5 seconds and then, cut through even if no dial tone is detected. If this option is not selected, there is no time limit on the "wait for dial tone" trunk group option.

TABLE 2-1 (CONT'D)
SYSTEM OPTIONS

Option Number	Option	Description
137	Message Waiting Setup (Lamp)	Enables the "MSGE WAIT" button and allows the attendant to cause the PABX to light "message waiting" lamps on extension.
138	Message Waiting Setup (Bell)	Enables the "MSGE WAIT" button and allows the attendant to cause the PABX to distinctively ring extension every 20 minutes, to signal a "message waiting" condition.
139	Attendant Timed Recall Camp-On 20 seconds	Causes Attendant Timed Recall Camp-On after 20 seconds.
140	Attendant Timed Recall Camp-On 40 seconds	Causes Attendant Timed Recall Camp-On after 40 seconds. If neither of these two options is selected, the Attendant Camp-On Recall time-out will be 30 seconds. These time-outs are only effective if the "Attendant Camp-On" feature has been selected.
141	Attendant Timed Recall Don't Answer - 20 seconds	Causes Attendant Timed Recall Don't Answer after 20 seconds.
142	Attendant Timed Recall Don't Answer - 40 seconds	Causes Attendant Timed Recall Don't Answer after 40 seconds. If neither of these two options is selected, Attendant Timed Recall Don't Answer will be 30 seconds.
143	Attendant Timed Recall Hold, 20 seconds	Causes Recall Hold after 20 seconds.
144	Attendant Timed Recall Hold, 40 seconds	Causes Recall Hold after 40 seconds. If neither of these two options is selected, Attendant Recall Hold time will be 30 seconds.
145	Night Service Time-Out 20 seconds	Sets Night Service Automatic Switching at 20 seconds.
146	Night Service Time-Out 40 seconds	Sets Night Service Automatic Switching time-out at 40 seconds. If neither of these two options is selected, the Night Service Automatic Switching time-out will be 30 seconds. These time-outs are only effective if the Night Service Automatic Switching option has been selected.
147	Call Forwarding - Don't Answer Time-Out - 20 seconds	Causes Call Forwarding Don't Answer to forward after 20 seconds of ringing.

TABLE 2-1 (CONT'D)
SYSTEM OPTIONS

Option Number	Option	Description
148	Call Forwarding - Don't Answer Time-Out - 40 seconds	Causes Call Forwarding Don't Answer to forward after 40 seconds of ringing. If neither of these two options is selected, the Call Forwarding Don't Answer time-out will be 30 seconds. These time-outs are only effective, if the "Call Forwarding Don't Answer" features are selected. The time-out selected will apply to both the station and system features.
149	Call Forwarding Busy (System DID, Dial-In CCSA)	Enables the DID, Dial-In, or CCSA Trunk Call Forwarding - Busy feature.
150	Call Forwarding - Don't Answer Time-Out (System, DID, Dial-In, CCSA)	Enables the DID, Dial-In, or CCSA trunk Call Forwarding - Don't Answer feature. See Call Forwarding - Don't Answer Time-Out system options.
151	Call Park Recall - 2 minutes	Sets the Call Park and Call Hold Recall time-out at 2 minutes.
152	Call Park Recall - 4 minutes	Sets the Call Park and Call Hold Recall time-out at 4 minutes. If neither of these two options is selected, the Call Park and Call Hold Recall timer will be 3 minutes. These time-outs are only effective if the "Call Park" or "Call Hold" stations feature has been selected.
153	End of Dial Signal for Outgoing Trunks (#)	Enables the use of the octothorp button (#) to signal end of dialing to the PABX on outgoing trunk calls from the attendant console or extension.
154	24-Hour Clock	Enables the console digital clock to display 24-hour time. If this option is not selected, the clock will display 12-hour time.
155	First Digit Toll Deny	Causes toll denial if the first digit dialed is 1, 0, * or #. If this option is not selected, toll denial will be on the first or second digit.
156	Message Registration Enable	Allows the system to keep count of the number of completed local Central Office calls made from each extension.
157	Message Registration Count Additional Supervisions	Counts all real (pseudo answer supervisions are ignored) answer supervisions received during each call.
158	Message Registration Timer 20 seconds	Causes a single pseudo answer supervision signal to be generated after 20 seconds if the serving CO does not provide answer supervision.

TABLE 2-1 (CONT'D)
SYSTEM OPTIONS

Option Number	Option	Description
159	Message Registration Timer 40 seconds	Causes a pseudo answer supervision signal to be generated after 40 seconds, if the serving CO does not provide answer supervision. If neither of these two options are selected, the pseudo answer supervision signal is generated after 30 seconds.
160	Message Registration Multiplier - 4 Units	Multiplies the Message Register count by 4.
161	Message Registration Multiplier - 3 Units	Multiplies the Message Register count by 3.
162	Message Registration Multiplier - 2 units	Multiplies the Message Register count by 2.
163	Message Registration Surcharge - 8 Units	Adds a surcharge of 8 units to the FIRST answer supervision signal received on each call.
164	Message Registration Surcharge - 7 Units	Adds a surcharge of 7 units to the FIRST answer supervision signal received on each call.
165	Message Registration Surcharge - 6 Units	Adds a surcharge of 6 units to the FIRST answer supervision signal received on each call.
166	Message Registration Surcharge - 5 Units	Adds a surcharge of 5 units to the FIRST answer supervision signal received on each call.
167	Message Registration Surcharge - 4 Units	Adds a surcharge of 4 units to the FIRST answer supervision signal received.
168	Message Registration Surcharge - 3 Units	Adds a surcharge of 3 units to the FIRST answer supervision signal received.
169	Message Registration Surcharge - 2 Units	Adds a surcharge of 2 units to the FIRST answer supervision signal received.
170	Message Registration Surcharge - 1 Unit	Adds a surcharge of 1 unit to the FIRST answer supervision signal received.
171	DID,CCSA to Non-CO Trunks via Attendant Inhibit	Prevents DID trunks from being connected to Non-CO trunks via the attendant.
172	Guest Room Button Enable	Allows use of the GUEST ROOM button which allows the attendant to display and change the feature in use by a hotel room.

TABLE 2-1 (CONT'D)
SYSTEM OPTIONS

Option Number	Option	Description
173	Room Status Button Enable	Allows the attendant to display and change status of a hotel room.
174	Do Not Disturb Intercept to the Attendant	Causes calls directed to extensions with Do Not Disturb active to be routed to the attendant.
175	Do Not Disturb and Message Waiting Display	Enable the attendant to display which extensions have Do Not Disturb active and extensions that have a message waiting active.
176	Single Digit Dialing Enable	Allows single digit codes to be used for special services even if the codes conflict with the numbering plan.
177	Single Digit Dialing Time-Out - 3 seconds	Completes a single digit dialed call after 3 seconds.
178	Single Digit Dialing Time-Out - 5 seconds	Completes a single digit dialed call after 5 seconds. If neither of these options are selected, single digit calls are completed after 4 seconds.
179	Attendant Station Busy Out Enable	Enables the attendant to make an extension inoperative and to also remove the busy out condition.
180	Flash Timer - 0.7 seconds	Sets the switchhook flash recognition time to lie between 190 ms and 700 ms.
181	Flash Timer - 0.9 seconds	Sets the switchhook flash recognition time to lie between 190 ms and 900 ms.
182	Flash Timer - 1.1 seconds	Set the switchhook flash recognition time to lie between 190 ms and 1100 ms.
183	Trunk Recall Partial Inhibit	Switchhook flashes that occur while an extension is talking on a trunk will be partially inhibited.
184	Reserved	
185	Reserved	
186	Reserved	
187	Reserved	
188	Reserved	
189	Reserved	
190	Automatic Wake-Up Enable	Allows the attendant to enable the system to ring an extension at a prearranged time.

TABLE 2-1 (CONT'D)
SYSTEM OPTIONS

Option Number	Option	Description
191	Automatic Wake-Up Print	This option enables all Wake-Ups that are attempted, not answered and answered to be printed.
192	Automatic Wake-Up Music on Hold	This option allows an extension answering a Wake-Up call to receive Music on Hold.
193	Room Message Register Audit Enable	This option allows an Audit of all extension Message Registers that have any contents.
194	Room Status Audit Enable	This option will allow the Room Status of all rooms to be printed.
195	Message Register & Message Waiting Change Print Enable	This option allows all Message Registers and Message Waiting to be printed.
196	Ignore Print Enable	Allows the attendant to dial a code that will purge and ignore the RS232 output.
197	Remote System Reset - Protection Override	This option allows the system to be reset from the test line on console, without setting the thumbwheel switches on the Tone Control Card to 777n.
198	Extension Non-CO Trunk to Trunk Connect Enable	This option allows an extension to connect a Non-CO trunk to a CO trunk, then go on-hook and leave the two trunks connected.
199	Multi Digit Toll Control Enable	This option enables the Multi Digit Toll Control Feature.
200	Traffic Measurement Enable	This option enables the Traffic Measurement Feature.
201	Traffic Measurement Extreme Value Mode	This option allows an active register's contents to be transferred to a storage register, if the active register is greater than the storage register.
202	Traffic Measurement Compact Traffic Report	This option causes the Traffic Measurements to be output in a compact format.
203	Traffic Measurement Polling	This option allows traffic data to be polled by an external device.
204	Traffic Measurement Autoprint	This option allows traffic data to be output automatically at the end of each hour.
205	Identified Trunk Group Enable	This option allows trunks to be programmed as Identified Trunks.

TABLE 2-1 (CONT'D)
SYSTEM OPTIONS

Option Number	Option	Description
206	Inhibit Automatic Supervision	This option allows an incoming tie to dial a CO trunk through the PABX. This allows any supervisions from the CO to be passed on to the tie trunk.
207	Printer Carriage Return Delay	This option allows additional time for the printer carriage to return.
208	Zero Message Register After Room Register Audit	If this option is selected, the Message Registers will be will be zeroed after an audit.
209	Traffic Measurement Console Function Enable	If this option is selected, the Traffic Measurement may be controlled from the attendant console.
210	Attendant Printer Control Enable	This option allows the attendant to control the printer from the console.
211	System ID Enable	This option allows the System ID to be printed with all Traffic Measurements, Data Dumps and SMDR reports.
212	Night Bell 3 with Minor Alarm Enable	This option allows Night Bell 3 to be rung in the event of a minor system alarm.
213	Printouts: Extra Line Feeds	This option allows for 2 extra line feeds for the printer in Hotel/Motel applications.
214	Wake-Up Alarm Enable	This option allows an extension to set its own Wake-Up alarm.
215	Reserved	
216	Speed Call Enable	This option enables the system Speed Call Feature.
217	Speed Call Programming Enable	This option allows the attendant to program a Common Use Table.
218	Speed Call Confidential Number Display	This option allows the attendant to observe a Common Use number.
219	Reserved	
220	Station Message Detail Recording Outgoing Calls	This option when activated initiates SMDR on outgoing calls.
221	Station Message Detail Recording Incoming Calls	This option when enabled initiates SMDR on all incoming calls.

TABLE 2-1 (CONT'D)
SYSTEM OPTIONS

Option Number	Option	Description
222	SMDR Extended Record	This option allows the length of the SMDR record to be extended from 80 to 88 characters. This allows the last four digits to 12-digit Account Codes and the system ID to be printed.
223	SMDR: Record Meter Pulses	This option allows the system to record all meter pulses from the CO.
224	SMDR: Indicate Long Calls	This option flags all calls that are longer than 5 minutes.
225	SMDR: Drop Incomplete Outgoing Call	If this option is selected, outgoing calls that are not complete are not recorded.
226	SMDR: Record Only Incoming CO Calls (CCSA & Non Dial Tie Trunks)	This option records all incoming calls in the switch.
227	SMDR: Drop Calls of Less than 8 Digits	This option will eliminate all trunk calls of 8 digits or less from the SMDR records.
228	Discriminating Dial Tone	An extension having Do Not Disturb or Call Forwarding Follow Me in effect, will receive a distinct dial tone.
229	Special ANI Feature	This option enables the special Automatic Number Identification feature.
230	Account Code Enable	This option enables the Account Code Feature.
231	Account Code Length: - 4 Digits	This option specifies the Account Code length to be 4 digits.
232	Account Code Length: - 8 Digits	This option specifies the Account Code length to be 8 digits.
233	Account Code Length: - 12 Digits	This option specifies the Account Code length to be 12 digits.
234	Variable Length Account Codes	This option allows Account Codes to be of a variable length up to 12 digits.
235	Customer Programming Enable	This option enables programming from the attendant console by the attendant.
236	Customer Range and Tenant Programming Enable	This option enables Range programming.

TABLE 2-1 (CONT'D)
SYSTEM OPTIONS

Option Number	Option	Description
237	Customer Programming of System Options Enable	This option enables System Option programming by the attendant.
238	Customer Programming of COS Definitions Enable	This option enables COS definition by the attendant.
239	Customer Programming of Features Enable	This option enables Feature definition (of access codes) by the attendant.
240	Customer Programming of Extensions Enable	This option enables Extension definition by the attendant.
241	Customer Programming of Trunks Enable	This option enables Trunk definition by the attendant.
242	Customer Programming of Hunt Groups Enable	This option enables Hunt Group definition by the attendant.
243	Customer Programming of Trunk Groups Enable	This option enables Trunk Group definition by the attendant.
244	Customer Programming of Toll Control Enable	This option enables Toll Control definition by the attendant.
245	Customer Programming of Speed Call Enable	This option enables Speed Call definition by the attendant.
246	Customer Programming of ARS Enable	This option enables ARS definition by the attendant.
247	Reserved	
248	Reserved	
249	Reserved	
250	Reserved	
251	Incoming to Outgoing Call Forwarding Enable	This option allows incoming calls to be forwarded (by speed call) to an external number.
252	ARS Enable	This option enables the ARS feature.
253	ARS Interchangeable Office Code Enable	Allows area and office codes to be used interchangeably.

TABLE 2-1 (CONT'D)
SYSTEM OPTIONS

Option Number	Option	Description
254	MITEL Printer Condensed SMDR Print	This option when used with the MITEL printer will condense the printout from 132 to 88 characters.
255	Printer Transmit Additional Nulls	This option allows the transmission of additional nulls to the printer.
256	Range Programming Enable	This option enables the Range Programming feature.
257	Hands-Free Enable	This option enables the Hands-Free feature.
258	External Call - Forwarding Enable	This option enables the External Call - Forwarding feature.
259	Call Forwarding Don't Answer Time-Out 10 s	This option limits the Call Forwarding Don't Answer Time-Out to 10 seconds.
260	Customer Printout Enable	This option allows the Customer RAM data to be output in a logical format on a printer.
261	Serial Call Override Flash Button	This option allows both the Guest Room feature and the Serial Call feature to be used in the same system. This is done by enabling the Flash button as the Serial Call button.
262	Data DeMultiplexer Enable	This option allows the RS232 information to be output to four different recording devices.
263	Music on Hold Disable	If music on hold is not provided, this option should be selected.
264	ARS: Return Dial Tone	If this option is selected, dial tone will be returned after dialing the ARS code. This will encourage the user to continue dialing, after the ARS code has been dialed.
265	Final Ring Time-Out 1 Minute	If this option is selected, the ringing time-out will be reduced to 1 minute (from 5 minutes).
266	Digit Translation Plan 1	If this option is selected the digit: 1 produces 2 pulses, 2 produces 3 pulses, 3 produces 4 pulses, 4 produces 5 pulses, 5 produces 6 pulses, 6 produces 7 pulses, 7 produces 8 pulses, 8 produces 9 pulses, 9 produces 10 pulses, 0 produces 1 pulse.

TABLE 2-1 (CONT'D)
SYSTEM OPTIONS

Option Number	Option	Description
267	Digit Translation Plan 2	If this option is selected the digit: 1 produces 9 pulses, 2 produces 8 pulses, 3 produces 7 pulses, 4 produces 6 pulses, 5 produces 5 pulses, 6 produces 4 pulses, 7 produces 3 pulses, 8 produces 2 pulses, 9 produces 1 pulses, 0 produces 1 pulse.
268	Digit Translation Plan 3	If this option is selected the digit: 1 produces 10 pulses, 2 produces 9 pulses, 3 produces 8 pulses, 4 produces 7 pulses, 5 produces 6 pulses, 6 produces 5 pulses, 7 produces 4 pulses, 8 produces 3 pulses, 9 produces 2 pulses, 0 produces 1 pulse.
269	ARS Dial Tone Time-Out 5 seconds	If this option is selected, "Dial 0" long distance calls are subject to a 5 second time-out (on first digit zero).
270	ARS Dial Tone Time-Out 10 seconds	If this option is selected, "Dial 0" long distance calls are subject to a 10 second time-out (on first digit zero).

TABLE 2-2
SYSTEM OPTION CONFLICTS

The following System Options are mutually exclusive, i.e. they cannot be simultaneously enabled on the same PABX.

105 and 229 Outgoing Trunk Camp-On & Special ANI Feature.
106 and 229 Outgoing Trunk Callback & Special ANI Feature.
106 and 230 Outgoing Trunk Callback & Account Code Enable.
113 and 132 Tenant Service & Controlled Outgoing Restriction Setup.
113 and 134 Tenant Service a Controlled Station-to-Station Restriction Setup.
113 and 156 Tenant Service & Message Registration Enable.
113 and 172 Tenant Service & GUEST ROOM Button.
113 and 173 Tenant Service & ROOM STATUS Enable.
113 and 190 Tenant Service & Automatic Wake-Up Enable.
113 and 205 Tenant Service & Identified Trunk Group Enable.
114 and 132 Tenant Service - Separate Consoles & Controlled Outgoing Restriction Setup.
114 and 134 Tenant Service - Separate Consoles & Controlled Station-to-Station Restriction Setup.
114 and 156 Tenant Service - Separate Consoles & Message Registration Enable.
114 and 172 Tenant Service - Separate Consoles & GUEST ROOM Button Enable.
114 and 173 Tenant Service - Separate Consoles & Room Status Enable.
114 and 190 Tenant Service - Separate Consoles & Automatic Wake-Up Enable.
114 and 205 Tenant Service & Identified Trunk Group Enable.
114 and 236 Tenant Service - Separate Consoles & Customer Range and Tenant Programming Enable.
121 and 172 Attendant Serial Call & GUEST ROOM Button Enable.
121 and 173 Room Status Enable & Attendant Serial Call.
137 and 138 Message Waiting Setups (lamp or bell).
191 and 203 Automatic Wake-Up Print & Traffic Measurement Polling.
193 and 203 Room Audit Enable & Traffic Measurement Polling.
194 and 203 Message Register Print & Traffic Measurement Polling.
195 and 203 Message Register and Message Waiting Change Print Enable & Traffic Measurement Polling.
203 and 204 Traffic Measurement Polling & Traffic Measurement Autoprint.
205 and 229 Identified Trunk Group Enable & Special ANI Feature.
207 and 229 Printer Carriage Return Delay & Special ANI Feature.
220 and 229 Station Message Detail Recording: Outgoing Calls & Special ANI Feature.
221 and 229 Station Message Detail Recording: Incoming Calls & Special ANI Feature.

In addition to the above system options, some console service features are mutually exclusive. These features are listed below:

ROOM RESTRICT and NIGHT 2
ROOM STATUS and NIGHT 2
CALL BLOCK and HOLD 4
SERIAL CALL and GUEST ROOM

NOTE: The Room Restriction and Room Status features utilize the same button, but are not mutually exclusive, as the Room Status feature can be arranged to include the Room Restriction function, if System Option 132 is selected.

Class-of-Service Options

2.04 Each system may contain up to 16 different Classes Of Service (COS). The COS defines which of the available options (Table 2-3) are active, and therefore available for use by any extensions assigned that COS.

2.05 The individual Classes of Service (COS) are selected by the console keys as described below:

- **COS DEFINE.** This key selects the Class-Of-Service program which permits changes to be made to any of the 16 individual COS. The entry made after selecting the program identifies which COS is to be modified.
- **OPTION.** The code entered (Table 2-3), after pressing the OPTION key, defines the extension option which is to be added or removed from the COS specified.
- **ADD.** Add the option to this COS.
- **DELETE.** Remove the option from the COS.
- **CANCEL.** If, after entering a number of codes for a COS, an error is discovered, the new entries may be removed from the system by pressing the CANCEL key.
- **ENTER.** After all entries have been made for the COS, the entries may be transferred to permanent storage by pressing the ENTER key.

Feature Access Codes

2.06 A number of features (Table 2-4) require access codes to allow the extension users to select and use the features. Each feature access code must be unique within the system. The feature access codes are programmed from the console keys as described below:

- **FEATURE.** This key selects the feature program and allows the access codes to be defined. The number dialed (Table 2-4), after pressing the FEATURE key, specifies the feature to which the access code is to be assigned.
- **ACCESS CODE.** After pressing this key, the number dialed (1 to 4 digits) is assigned as the access code of the feature selected. The system, automatically, checks to see if the code is assigned to any other equipment or feature within the system, and if a match is found, displays an error message.
- **CANCEL.** The access just assigned to a feature may be removed by pressing the CANCEL key. The new access code may be assigned immediately.
- **DELETE.** Pressing this key deletes the access code assigned to the feature, rendering the feature inoperative.
- **ENTER.** Transfers all new entries to permanent memory.

Extensions

2.07 The extension program allows all data associated with extensions to be specified, changed, or removed from the system memories. The extension program is selected by the console keys as described below:

- **TENANT.** The number, 1 to 4, entered after pressing the TENANT key, specifies the tenant for which the extensions are being programmed, if the system is to be used as a multi-tenant system. If the system is to be used by a single tenant, the TENANT key must not be pressed.
- **EXTN.** Pressing this key enables the extension program, which allows new data to be entered or existing data to be changed or removed.
- **EQPT NUMBER.** The number (1-112, 161-256), entered after pressing the EQPT NUMBER key, defines the equipment number of the line circuit serving the extension (Fig. 2-1).

TABLE 2-3
CLASS OF SERVICE OPTIONS

Option Number	Option	Description
33	Automatic Callback	Allows Automatic Callback - Busy and Automatic Callback - Don't Answer. See system option Outgoing Trunk Callback.
34	Call Forwarding - Busy	Allows Call Forwarding - Busy.
35	Call Forwarding - Don't Answer	Allows Call Forwarding - Don't Answer.
36	Call Forwarding - Follow Me	Allows Call Forwarding - Follow Me.
37	Call Park	Allows Call Park. See "Park Recall" system options.
38	Never a Forwardee	Prevents calls being forwarded to this line.
39	Directed Call Pickup	Allows Directed Call Pickup - this is required for remote access of Call Park.
40	Executive Busy Override	Allows Executive Busy Override.
41	Data Security	Provides security against any audio intrusion.
42	Station Override Security	Provides security against Executive Busy Override.
43	Inward Restriction (DID)	Denies Direct-In-Dial calls.
44	Originate Only	Denies all incoming calls.
45	Receive Only	Denies all outgoing calls.
46	Flash Disable	Inhibits recognition of switchhook flash.
47	Never a Consultee	Denies incoming calls that originated from a Consultation Hold.
48	Broker's Call	Allows Broker's Call. Denies transfer and add-on. Cannot be provided together with Station Conference, or Flash for Attendant.
49	Station Conference	Allows Station Controlled Conference.
50	Meet-Me Conference	Allows access to Meet-Me Conference.
51	Camp-On	Allows Station Camp-On. See System Option "Outgoing Trunk Camp-On".
52	Do Not Overflow	Prevents an extension from accessing trunk groups via overflow.

TABLE 2-3 (CONT'D)
CLASS OF SERVICE OPTIONS

Option Number	Option	Description
53	Pager Access	Allows access to both paging amplifiers
54	TAFAS Access	Allows Trunk Answer From Any Station access.
55	Hold Pickup	Allows access to the Hold Pickup feature.
56	Account Code Access	Allows an extension to use an account code on trunk calls.
57	Manual Line	Routes all originating calls directly to the attendant for completion.
58	Contact Monitor	Allows the line to be used for contact monitoring and to call the attendant upon detection of contact closure.
59	Non-CO Trunk via Attendant Inhibit	Denies access to Non-CO trunks via the attendant.
60	CO Trunks via Attendant Inhibit	Denies access to CO trunks via the attendant.
61	No Dial Tone	Denies dial tone to originating calls from incoming tie-lines.
62	Flash For Attendant	Provides automatic connection to the attendant console when the switchhook is flashed. (Attendant Transfer) Cannot be provided together with Broker's Call, Consultation Hold, Transfer and Add-On, or Station Conference.
63	H/M Stn-Stn Restrict Applies	Allows controlled station-to-station restriction to apply, when activated by the attendant. See system option "Controlled Station-to-Station Restriction".
64	Message Register	Allows the system to keep count of the local call units made from this extension.
65	Trunk Group 1	Allows access to individual trunk groups.
66	Trunk Group 2	Allows access to individual trunk groups.
67	Trunk Group 3	Allows access to individual trunk groups.
68	Trunk Group 4	Allows access to individual trunk groups.
69	Trunk Group 5	Allows access to individual trunk groups.
70	Trunk Group 6	Allows access to individual trunk groups.

TABLE 2-3 (CONT'D)
CLASS OF SERVICE OPTIONS

Option Number	Option	Description
71	Trunk Group 7	Allows access to individual trunk groups.
72	Trunk Group 8	Allows access to individual trunk groups.
73	Trunk Group 9	Allows access to individual trunk groups.
74	Trunk Group 10	Allows access to individual trunk groups.
75	Trunk Group 11	Allows access to individual trunk groups.
76	Trunk Group 12	Allows access to individual trunk groups.
77	Message Waiting Applies	Allows the attendant to set a message waiting indication at the extension.
78	Room Do Not Disturb Setup Enable	Allows the extension user to set up and cancel Do Not Disturb for the extension – by dialing appropriate access codes.
79	Call Hold and Retrieve Access	Allows the extension access to the Call Hold and Retrieve feature.
80	Room Status Applies	Allows the Room Status of the extension to be displayed at the attendant console.
81	Call Forwarding System Inhibit	The system Call Forwarding options 149 and 150 are inactive on extensions with this Class-Of-Service option.
82	Alarm Call Setup Enable	Allows either the extension to change or cancel its own wake-up time.
83	Forced Account Code Entry	An extension, with this option in its COS, must dial a 1- to 12-digit Account Code before dialing a client's number.
84	No SMDR Record Applies	An extension with this option in its COS will not be recorded by Station Message Detail Recording.
85	Speed Call Table 1 & 2 Access	Allows access to common-use Speed Call Tables specified.
86	Speed Call Table 3 & 4 Access	Allows access to common-use Speed Call Tables specified.
87	Speed Call Table 5 & 6 Access	Allows access to common-use Speed Call Tables specified.
88	Speed Call Table 7 & 8 Access	Allows access to common-use Speed Call Tables specified.

TABLE 2-3 (CONT'D)
CLASS OF SERVICE OPTIONS

Option Number	Option	Description
89	Speed Call Table 9 & 10 Access	Allows access to common-use Speed Call Tables specified.
90	Speed Call Table 11 & 12 Access	Allows access to common-use Speed Call Tables specified.
91	Speed Call Table 13 & 14 Access	Allows access to common-use Speed Call Tables specified.
92	Speed Call Table 15 & 16 Access	Allows access to common-use Speed Call Tables specified.
93	Speed Call Table 17 & 18 Access	Allows access to common-use Speed Call Tables specified.
94	Cannot Dial a Trunk After Flashing	An extension, with this option in its COS, will not be able to dial a trunk after flashing.
95	Incoming Trunk Rotary Dial Only	An incoming trunk, with this option in its COS, will ignore DTMF signalling.
96	ARS Restricted	An extension, with this option in its COS, will not have access to the last route selected by ARS.
97	External Call Forwarding Connect Enable	An extension must have this option in its COS, in order to have a call it makes to an extension with External Call Forwarding in effect completed.
98	Transfer with Privacy	An extension with this option in its COS will be able to: put a call on hold, dial a new number and consult privately or hang up and the call on hold and the new number will be connected.
99	Hands-Free Station	An extension with this option in its COS need not go off-hook to answer a call since it should be in the off-hook position.
100	ARS Allowed	An ARS user with this option will be able to access a Trunk Group, even though the user's COS was not enabled for that Trunk Group. This will occur when the ARS feature finds that the only Trunk Group free is not in the user's COS but will force a connection. This option must be enabled for an extension to use ARS.
101	Earth Ground Button	This option allows the use of a Earth Ground Button on an extension's telephone set. Note: A special line card is required when using this COS option.

TABLE 2-3 (CONT'D)
OPTION CONFLICTS

45	Receive Only	and	58	Contact Monitor
46	Flash Disable	and	48	Broker's Call
46	Flash Disable	and	49	Station Conference
46	Flash Disable	and	62	Flash for Attendant
48	Broker's Call	and	49	Station Conference
62	Flash for Attendant	and	49	Station Conference
62	Flash for Attendant	and	48	Broker's Call

TABLE 2-4
FEATURE ASSIGNMENTS

Feature Number	Description
1	Attendant Access
2	Callback - Don't Answer
3	Call Forwarding - Busy
4	Call Forwarding - Don't Answer
5	Call Forwarding - Follow Me
6	Call Park
7	Dial Call Pickup
8	Directed Call Pickup
9	Meet-Me Conference
10	Pager 1
11	Pager 2
12	Hold Pickup Access
13	Pager 1 and 2
14	TAFAS-All
15	TAFAS-1
16	TAFAS-2
17	TAFAS-3
18	Attendant Function
19	Maintenance Function
20	DID Attendant Access Code
21	Direct Inward System Access
22	Executive Busy Override (Single Digit)**
23	Callback - Busy (Single Digit)**
24	Room Do Not Disturb Setup and Cancel
25	Call Hold
26	Call Retrieve (Local)
27	Call Retrieve (Remote)
28	Room Status Update (Maid in Room)
29	Programming Security Code
30	Alarm Call
31	Account Code
32	Speed Call
33-42	Assign access codes features 33-42 for Trunk Group 1 if necessary
43	Customer Programming Security Code
44	ARS Access Code
45	Hands-Free Activation
46	Call Forwarding Busy/Don't Answer

** First digit conflicts between these codes and other access codes are allowed. See Section MITL9105/9110-097-105-NA for complete description of feature operation.

HARDWARE POSITION NUMBER	PLUG 7						PLUG 9						PLUG 11										EXTENSION UNIT NO.	TRUNK UNIT NO. (4 TRUNK)	TRUNK UNIT NO. (2 TRUNK)
	161	169	177	185	193	201	209	217	225	233	241	249											1		
	162	170	178	186	194	202	210	218	226	234	242	250											2	1	1
	163	171	179	187	195	203	211	219	227	235	243	251											3		
	164	172	180	188	196	204	212	220	228	236	244	252											4	2	
	165	173	181	189	197	205	213	221	229	237	245	253											5		
	166	174	182	190	198	206	214	222	230	238	246	254											6	3	2
	167	175	183	191	199	207	215	223	231	239	247	255											7		
	168	176	184	192	200	208	216	224	232	240	248	256											8	4	
	1	2	3	4	5	6	7	8	9	10	11	12	13	14	15	16	17	18	19	20	21	22	CARD POSITION		
	31	32	33	34	35	36	37	38	39	40	41	42	43	44	45	46	47	48	49	50	51	52	SLOT NUMBER		
	PLUG 8						PLUG 10						PLUG 12												

SHELF 2 (SX-200 ONLY)

HARDWARE POSITION NUMBER	PLUG 1						PLUG 3						PLUG 5										EXTENSION UNIT NO.	TRUNK UNIT NO. (4 TRUNK)	TRUNK UNIT NO. (2 TRUNK)
	001	009	017	025	033	041	049	057	065	073	081	089	097	105	113								1		
	002	010	018	026	034	042	050	058	066	074	082	090	098	106	114								2	1	1
	003	011	019	027	035	043	051	059	067	075	083	091	099	107	115				RESERVED				3		
	004	012	020	028	036	044	052	060	068	076	084	092	100	108	116				FOR				4	2	
	005	013	021	029	037	045	053	061	069	077	085	093	101	109	117				COMMON				5		
	006	014	022	030	038	046	054	062	070	078	086	094	102	110	118				CONTROLS				6	3	2
	007	015	023	031	039	047	055	063	071	079	087	095	103	111	119								7		
	008	016	024	032	040	048	056	064	072	080	088	096	104	112	120								8	4	
	1	2	3	4	5	6	7	8	9	10	11	12	13	14	15	16	17	18	19	20	21	22	CARD POSITION		
	1	2	3	4	5	6	7	8	9	10	11	12	13	14	15	16	17	18	19	20	21	22	SLOT NUMBER		
	PLUG 2						PLUG 4						PLUG 6												

CONSOLE CONTROL/RCP CARD | CONSOLE CONTROL CARD | TONE CONTROL

SHELF 1

NOTES:
1. DUAL AND OR QUAD RECEIVER EQUIPMENT NUMBERS ARE 090 098 106 114 092 100 108 AND 116.
2. QUAD RECEIVER EQUIPMENT NUMBERS ARE 094 102 110 118 096 104 112 AND 120.
3. EQUIPMENT POSITION 001 IS RESERVED FOR THE TEST LINE AND MUST THEREFORE BE EQUIPPED WITH A LINE CARD.
4. TRUNK EQUIPMENT NUMBER IS SAME AS INDIVIDUAL TRUNK ACCESS CODE.
5. SLOT 15 IS RESERVED FOR RECEIVER NO. 1.

Fig. 2-1 Equipment Number

- EXTN NUMBER. The 1, 2, 3 or 4 digit number entered after pressing the EXTN NUMBER key specifies the extension number of the telephone set being added or changed. This number must not conflict with other extension numbers or access codes. If non-conflicting single digit dialing is required, enter N#, where N is the single digit.

- COS NUMBER. The number (1-16) entered, after pressing the COS NUMBER key, specifies the Class Of Service, and therefore the features, that may be accessed by the extension. See 2.04 Class-of-Service Option.

- TOLL DENY. Each extension may be defined as TOLL ALLOWED - allowed to originate calls to the toll network; or TOLL DENIED - not allowed to make calls to the toll network. To make the extension TOLL ALLOWED, press the TOLL DENY key, then the DELETE key. To make the extension TOLL DENIED, press the TOLL DENY key, then the ADD key. The extension will be TOLL DENIED, only if the extension and the trunk group are TOLL DENIED. This allows Toll Denial on a trunk group basis if System Option 199 was enabled. See also Section MITL9105/9110-097-212-NA Multi-Digit Toll Control.

- BUSY LAMP NUMBER. After pressing this key, the number entered (1-200) defines the position (Fig. 2-2) of the busy lamp to be associated with the extension. If the extension is not to be assigned a busy lamp, no entry is required.

- DELETE. Pressing the DELETE key removes the existing busy lamp assignment.

- PICKUP GROUP. The system may hold up to 30 independent call pickup groups. An extension may be made a member of any group, by entering the pickup group number after pressing the PICKUP GROUP key. Any number of extensions may be assigned to a pickup group, but an extension may only be a member of one group at any time.

- CANCEL. Pressing the CANCEL key, prior to the operation of the ENTER key, removes any data entered during the foregoing Extension Program sequence.

- ENTER. Transfer all new data for the extension to permanent memory.

Hunt Groups

2.08 The system can hold up to 12 different hunt groups. Each hunt group may contain an unlimited number of members and be specified as:

- TERMINAL HUNTING. The hunt group sequence starts at the first equipment number and ends at the last number in the hunt chain. The call is completed at the first idle number encountered.

- CIRCULAR HUNTING. Hunting starts at the last equipment number reached and hunts over all members of the hunt group. The call is completed at the first idle number found.

- SECRETARIAL HUNTING. This is terminal hunting where the last number is common to two or more extension hunt groups.

- DUAL NUMBER ACCESS. An extension may be programmed to allow it to be accessed by two different numbers. The first number is assigned when programming the extension and the second number by programming a hunt group with the extension as the only member. The extension may therefore be accessed by dialing the extension number or the hunt group master number (see Section MITL9105/9110-097-105-NA Single Digit Dialing).

Note: When changing the list of members of a hunt group in any way, all members of the hunt group must be re-entered.

2.09 The following console keys are activated to program the hunt groups:

- TENANT. If multi-tenant service is to be selected, the number (1-4) entered after pressing the TENANT key, specifies the tenant for which the hunt groups are being

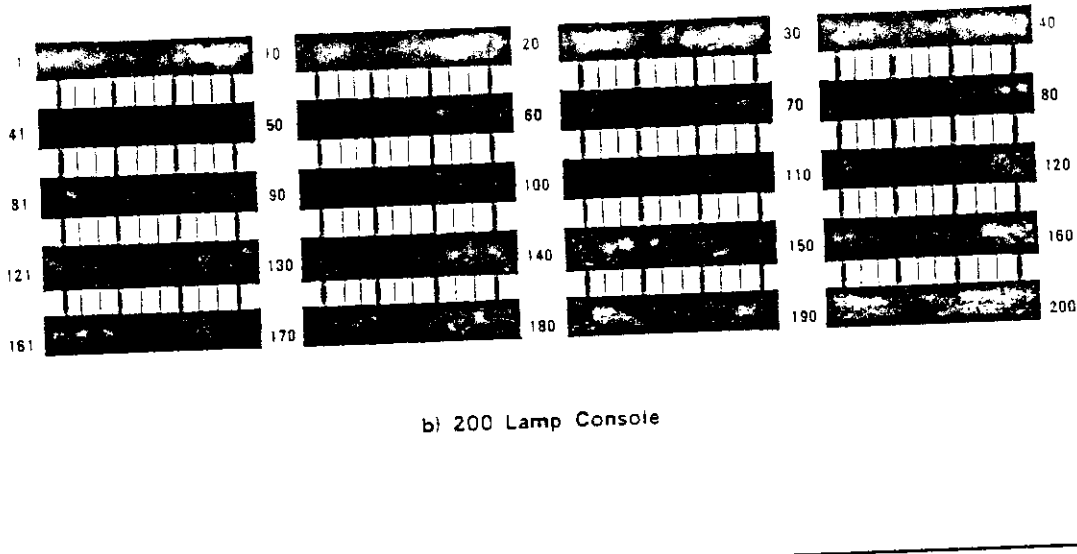

b) 200 Lamp Console

X3481

Fig. 2-2A Busy Lamp Position Numbering

programmed. If single tenant operation is to be used, the TENANT key must not be pressed.

- **HUNT GROUP.** Allows the hunt group required to be selected by dialing the hunt group number (1-12).

- **ACCESS CODE.** Allows the 1, 2, 3 or 4 digit code identifying the hunt group master number to be entered.

- **DELETE.** Pressing this key deletes the hunt group from the system memory.

- **EQPT NUMBER.** This key must be pressed before dialing the equipment number of each extension in the hunt group. If circular hunting is to be defined, the last entry in the hunt group must be the same as the first entry. Membership in a hunt group is mutually exclusive with "message registration" and "room status" for this extension.

- **CANCEL.** Deletes all new data entered associated with the hunt group.

- **ENTER.** Transfers all new data for the hunt group to permanent memory.

Trunks

2.10 This program allows the type console appearances, day and night assignment, COS and toll deny codes of each trunk to be specified.

2.11 The following console keys are employed to enter this program:

- **TENANT.** If the multi-tenant service is to be selected, the number (1-4) entered after pressing the TENANT key, specifies the tenant for which the hunt groups are being programmed. If single tenant operation is to be used, the TENANT key must not be pressed.

- **TRUNK.** Selects the trunk program

- **EQPT NUMBER.** The number entered (10-112; 162-256, even numbers only)

specifies the equipment number of the trunk circuit serving this trunk (Fig. 2-1).

- **TYPE.** The code entered, defines the type of trunk being specified. (See MITL9105/9110-097-105-NA Features and Services Description for definition of VNL)

Code 1 - CO trunk + VNL
Code 2 - DISA trunk + VNL
Code 3 - DID trunk + VNL
Code 4 - Dial-In tie trunk + VNL
Code 5 - Non Dial-in tie trunk + VNL
Code 6 - CCSA trunk + VNL
Code 11 - CO trunk + NON VNL
Code 21 - DISA trunk + NON VNL
Code 31 - D ID trunk + NON VNL
Code 41 - Dial-In tie trunk + NON VNL
Code 51 - Non Dial-In tie trunk + NON VNL
Code 61 - CCSA trunk + NON VNL

- **DELETE.** If this key is pressed, the information associated with this trunk is removed from the system memory.

- **BUSY LAMP NUMBER.** The number (1-200) defines the position (Fig. 2-2) of the busy lamp to be associated with this trunk. If the trunk is not to be assigned, a busy lamp no entry is required.

- **DELETE.** If this key is pressed, the busy lamp assignment for this trunk is deleted.

- **LDN NUMBER.** (Types 1, 5, 11, 51 only) This single digit entry defines the Listed Directory Number key (LDN 1, 2, 3 or 4) on the attendant console which is to be associated with the trunk. If the trunk is not to appear on the attendant console, no entry is required. DID trunk calls to the attendant always appear on LDN 4.

- **DAY NUMBER.** (Types 1, 5, 11, 51 only) The code entered for Day Number specifies any special assignments of the trunk during normal day time service. These assignments may be:

- no assignment to bells, extensions or hunt groups, console appearance only (Default code #0)

- assigned to ring bell 1, code #1

- assigned to ring bell 2, code #2

- assigned to ring bell 3, code #3

- assigned to one extension - enter equipment number of extension

- assigned to a hunt group, codes 1 to 12

- **I/C.** (Types 3, 6, 31, 61 only) This two or three digit entry for DID or CCSA trunks defines the number of incoming digits, the number of digits to be absorbed; and the digit to be added to the incoming number after absorption.

- **NIGHT 1.** (Types 1, 5, 11, 51 only) This entry defines the assignment of the trunk during Night Service 1. Assignment is made in the same manner as for DAY NUMBER assignment.

- **NIGHT 2.** The entry defines the assignment of the trunk during Night Service 2. This assignment is made in the same manner as for DAY NUMBER assignment.

- **COS NUMBER.** (Types 2, 4, 21, 41 only) The number (1-16) entered, after pressing this key, specifies the Class of Service and therefore the features, that may be accessed by the dial-in trunk. See 2.04 Class-of-Service Option.

- **TOLL DENY.** (Types 2, 4, 21, 41 only) Each dial-in trunk may be defined as TOLL ALLOWED - allowed to originate calls to the toll network; or TOLL DENIED - not allowed to make calls to the toll network. To make the tie trunk TOLL ALLOWED, press the TOLL DENY key, then the DELETE key. To make the tie trunk TOLL DENIED, press the TOLL DENY key, then the ADD key. If System Option 199 is enabled, see also Section MITL9105/9110-097-212-NA Multi Digit Toll Control.

- **CANCEL.** Pressing this key, prior to the operation of the ENTER key, removes any data entered in the temporary storage.

- ENTER. Deletes previous data associated with this trunk and stores the new data.

Trunk Groups

2.12 The trunk group program specifies the trunks forming the trunk group, the restrictions and options common to all trunks in the group. The trunk group may employ terminal or circular hunting (see 2.08). When making any change to the list of members of a trunk group, all members of the group must be re-entered. The following console keys are activated to program the trunk groups:

- TENANT. The number, 1 to 4, entered after pressing the TENANT key, specifies the tenant for which the extensions are being programmed, if the system is to be used as a muiti-tenant system. If the system is to be used by a single tenant, the TENANT key must not be pressed.

- TRUNK GROUP. The number (1-12) entered specifies the trunk group to be set up or changed.

- ACCESS CODE. Allows the 1, 2, 3 or 4 digit code identifying the trunk group to be specified.

- DELETE. Pressing this key deletes the trunk group from the system memory.

- TYPE. The four digit code entered after pressing the TYPE key specifies the trunk group type parameters as detailed in Table 2-5.

- TOLL DENY. Each trunk group may be specified as TOLL ALLOWED - allowed to originate calls to the toll network, or TOLL DENIED - not allowed to make calls to the toll network. To make the trunk group TOLL ALLOWED, press the TOLL DENY key, then the DELETE key. To make the trunk group TOLL DENIED, press the TOLL DENY key, then the ADD key. Toll Denial is effective only when both the trunk group and the extension or dial-in trunk involved are TOLL DENIED, are ignored by the PABX. This prevents circumvention of the toll denial by dialing a fast valid digit before CO dial tone is received.

- OVERFLOW. The number entered (1-12) specifies the trunk overflow group number. If all trunks within the trunk group being defined are busy, any additional calls directed to the trunk group will be rerouted to the overflow group. Overflow arrangements which direct the callback to the original group must NOT be specified.

- EQPT NUMBER. This key must be pressed before dialing the equipment number (2-112; 162-256) of each trunk in the group. If circular hunting is to be defined, the last entry in the hunt group must be the same as the first entry. If circular hunting is not required, the trunk group is terminal hunting (see 2.08).

- CANCEL. Pressing the CANCEL key removes all new data entered for the trunk group, leaving any existing data unchanged.

- ENTER. Removes all old data associated with the trunk group and transfers the new data entered to permanent memory.

3. PROGRAMMING

General

3.01 After all installation procedures have been completed in accordance with Section MITL9105/9110-097-200-NA, the system should be programmed as detailed in the MITEL Action Procedures (MAP's) contained in Appendix 1 and 2.

Error/Confirm Codes

3.02 During standard system programming, the console DESTINATION display may show "error" or "confirm" codes, with the meanings indicated in Tables 3-1 and 3-2 respectively. These tables also indicate required action when the code is displayed. In the extended programming mode, errors may also be displayed at the console. Tables 3-3 and 3-5 show the meanings of these errors.

Attendant Function Access Codes

3.03 Table 3-6 is a listing of the attendant function access codes. To select any of the

TABLE 2-5
TRUNK GROUP TYPE CODES

First Digit (Note 1)	Second Digit	Third Digit (Note 2)	Fourth Digit
1 No supervision	1 No Message Register	+1 Dial pulse, no wait for dial tone	1 CO trunk
2 Answer supervision	2 Message Register	+2 Dial pulse, wait for dial tone	2 Non CO trunk
3 Toll Reversal	3 SMDR Enable and no Message Register	++3 DTMF, no wait for dial tone	**3 Identified Trunk Group (Type XX13) only is valid)
4 Outgoing audio inhibited until answer supervision	4 SMDR Enable and Message Register Enable	++4DTMF, wait for dial tone	

+ If extensions are DTMF, the trunk will convert to dial pulse. Early line split is not provided.
++ Trunks will repeat DTMF or dial pulse signals unless outgoing audio is inhibited.

Note 1

- If answer supervision is not required (or not provided by the CO), then use 1- (No supervision).
- If trunks provide answer supervision and tandem trunking or message registration is used, then specify 2, (Answer Supervision).
- If supervision is used to indicate toll calls, and this feature is required, then use 3- (Toll supervision).
- If audio cut-through on tie-trunk tandem calls is required only after receipt of answer supervision, then use 4- (Outgoing audio inhibit until answer supervision). In addition the audio is inhibited until timed out or unless a # is dialed.

Note 2

- If "wait for dial tone" is selected, then any digits dialed prior to receipt of CO dial tone

attendant functions, the access code for Feature 18 must have been dialed. The code * is used in Table 3-6.

Maintenance Function Access Codes

3.04 Table 3-7 lists the maintenance function access codes. To select any of the maintenance functions, the access code assigned for the maintenance function must be dialed (Feature Number 19). The code 555 is used in Table 3-7, for the maintenance code and may be dialed from the test line or console.

Time-Out Information

3.05 During programming, it may be necessary to know the time-out information with regard to certain functions. Table 3-8 is such a listing of the time-out information.

TABLE 3-1
PROGRAMMING ERROR CODES

Error Code	Cause	Key Affected	Key Flashing	Meaning	Action Required
E0	Invalid key pressed.	ALL	NONE	The last key pressed is invalid at this time.	Check procedure and press correct key.
E1	Invalid number.	ALL	None	The number entered is out of range or contains corrupted data.	Press key associated with entry and re-entry number.
E2	Key other than ENTER or CANCEL pressed.	LAMP TEST TENANT, OPTION COS DEFINE. FEATURE EXTN NUMBER, TRUNK HUNT GROUP TRUNK GROUP NEXT, EQPT NUMBER	ENTER, CANCEL	An attempt was made to leave the current mode, after some parameters were changed, but before ENTER or CANCEL was pressed. ENTER may be used to write the new programming information back to the non-volatile RAM, or use CANCEL to ignore all programming changes made, since the last time ENTER was pressed.	Press ENTER to transfer the data to permanent or CANCEL to remove the data from the temporary store.
E3	Access code has not been entered.	HUNT GROUP TRUNK GROUP	ACCESS CODE	Attempting to enter members into a hunt or trunk group before an access code has been assigned to the group.	Press ACCESS CODE key and enter required access code.
E4	The extension number or access code entered is already assigned.	EXTN, ACCESS CODE	None	The extension number or access code entered is already assigned to an extension, feature, hunt group or trunk group. In Trunk mode, an attempt is made to delete a member of a trunk group. Equipment Numbers desired must be entered. In Trunk Group mode, an attempt is made to place a trunk into a trunk group while that trunk is currently programmed into another trunk group. Callback and Executive Override conflict, i.e., trying to enter a Callback code while same code is assigned to Executive Busy Override and vice-versa.	Check code entered. 1 If code is correct, terminate entry, remove other appearance of code and re-enter all new data. 2 If code is incorrect, press key associated with entry and re-enter extension number or access code.
E5	Number entered contains incorrect number of digits or conflicting option enabled in this COS.	EXTN NUMBER ACCESS CODE	None	The extension number or access code is in conflict with the existing numbering plan. Attempting to add an option to a COS in which a conflicting option is enabled. Attempting to add a System Option when a conflicting option exists.	Check entry. Press key associated with entry and re-enter number.

TABLE 3-1 (CONT'D)
PROGRAMMING ERROR CODES

Error Code	Cause	Key Affected	Key Flashing	Meaning	Action Required
E6	Incorrect equipment number entered.	EQPT NUMBER	None	Attempting to assign an equipment number that is: - undefined - defined as a trunk to an extension hunt group or extension - defined as an extension to a trunk group or a trunk - an extension with message registration to hunt group or pickup group. An equipment number assigned to an extension must be deleted as an extension, before being programmed as a trunk. An equipment number assigned to a trunk must be deleted as a trunk, before being programmed as an extension.	Remove conflicting option (a) Assign equipment number correctly (b) Enter new equipment number
E7	System is busy.	ENTER, TENANT	None	(a) Attempting to initialize a system while PABX is in use. (b) Attempting to change data of an extension or trunk while that extension or trunk is in use. It must be idle or busied-out.	(a) Wait until system is idle (b) Wait until extension or trunk is idle
	Extension has a message register that is not zeroed or has a message waiting, or has Do Not Disturb set.	ENTER	None	- a valid message register exists for this extension - extension has a message waiting or Do Not Disturb set	Zero message register, reset message waiting or Do Not Disturb and reprogram

TABLE 3-1 (CONT'D)
PROGRAMMING ERROR CODES

Error Code	Cause	Key Affected	Key Flashing	Meaning	Action Required
E8	Trunk or equipment number already assigned. In Tenant Service, pressing the Hunt Group key when all hunt groups are assigned to other tenants. In Tenant Service, pressing the Trunk Group key when all trunk groups are assigned to other tenants. In Tenant Service, attempting to put an extension assigned to one tenant into a hunt group of a different tenant. In Tenant Service, attempting to put a trunk assigned to one tenant into a trunk group of a different tenant. In Tenant Service, entering a hunt group number assigned to a different tenant (after pressing HUNT GROUP). In Tenant Service, Trunk Group Programming, selecting an overflow group that belongs to another tenant. In Tenant Service, entering a trunk group number assigned to a different tenant (after pressing TRUNK GROUP).	ENTER	None	Attempting to assign a trunk or equipment number to more than one tenant at the same time.	(a) Enter proper trunk or equipment number (b) Press ENTER
E9	Non-Volatile RAM error	ENTER	None	Ones and Zeros test failed	
E021 -22	At Power Up		None		
E022 -22	At Power Up		None		Non-Volatile RAM must be initialized and/or reprogrammed
E023 -22	At Power Up		None	RAM/COS card switches not set correctly	Go to Section MITL 9105/9110-097-200-NA

TABLE 3-2
STANDARD CONFIRM CODES

Confirm Code	Cause	Key Affected	Flashing Lamp	Action Required
C0	Attempting to assign an equipment number for an extension to a slot containing a trunk card	EQPT NUMBER	CONFIRM	Check assignment– – if correct, press CONFIRM key. Equipment number entered is accepted as the number for the equipment type being programmed. All data associated with the original appearance of the equipment number is removed – if incorrect, press EQPT NUMBER and re–enter new equipment number.
C0	Attempting to assign an equipment number for a trunk to an empty slot or a slot containing an extension card	EQPT NUMBER	CONFIRM	
C1	Attempting to assign an extension that already exists	EXTN NUMBER	CONFIRM	Check assignment– – if correct, press CONFIRM key. The extension number entered is accepted as the extension number for the equipment being defined. All data associated with the original appearance of the extension number is removed. – If incorrect, press EXTN NUMBER and re–enter extension number.
C2	The busy lamp assignment already exists	BUSY LAMP	CONFIRM	Check assignment– – If correct, press CONFIRM key. Busy lamp assignment is accepted for this equipment. All data associated with original assignment is removed. – If incorrect, press BUSY LAMP and re–enter busy lamp assignment.

AUTOMATIC ROUTE SELECTION CONFIRM CODE

Error	Applies to:	Meaning
C6	Area Code	A request has been made to delete all entries in a table.

TOLL CONTROL PROGRAMMING CONFIRM CODES

Error	Applies to:	Meaning
C5	Control Plan mode Table mode	An attempt was made to assign a table which is currently assigned elsewhere. Pressing the confirm key will de–assign the table from wherever it was previously assigned to assign it to the specified place.
C6	Table Mode	A request has been made to delete all entries in a table. If CONFIRM is pressed all entries will be de–assigned. The old data in the non–volatile RAM will not be destroyed until the ENTER key is pressed, and the table itself can be reprogrammed as desired before the ENTER key is used.

TABLE 3-3
EXTENDED PROGRAMMING ERROR CODES - TOLL CONTROL

Error	Applies to:	Meaning
E0	All modes	Invalid key pressed. Consult MAP for correct procedure. System Option 199 may not be enabled.
E1	Trunk Group mode Control Plan mode	Number is not within the range of the parameter being defined. Re-enter parameter key defined.
E2	All modes	An attempt was made to leave the current mode after some parameters were changed but before ENTER or CANCEL was pressed. ENTER may be used to write the new programming information back to the non-volatile RAM, or use CANCEL to ignore all programming changes made since the last time ENTER was pressed.
E3	Control Plan mode	The number entered is not valid for the current configuration. Re-enter a number which exists for the configuration of the extended non-volatile customer RAM.
E4	Table mode	The table entry code is invalid for the table programmed. This occurs in the following situation: 1. A code of more than 3 digits in the length for an 800-entry or 20-range table. 2. A code not in the range of 200-999 for an 800-entry table. 3. A code which already exists or a code which would be ambiguous in conjunction with the existing table entries, for a 4-entry table.
E5	Table mode	The table is full and cannot hold the entry.
E7	Configuration mode	Configuration is not allowed because the Tone Control card switches are not 7776 or the system is not idle.
E9	Configuration mode	A hardware failure was detected while clearing the extended customer non-volatile RAM.

TABLE 3-4
EXTENDED PROGRAMMING ERROR CODES - SPEED CALL

Error Code	Key Involved	Explanation
E1	EQPT NUMBER	The Equipment Number entered is outside the range of valid numbers. Check procedures and press key, then redial proper digits.
E1	ACCESS NUMBER	The Access Number entered is not the first of the five-number group. Enter the proper Access Number.
E1	NUMBER REDIAL	An invalid Number Redial value was entered. Enter the proper redial value.
E2	All modes	An attempt was made to leave the current mode after some parameters were changed but before ENTER or CANCEL was pressed. ENTER may be used to write the new programming information back to the non-volatile RAM, or use CANCEL to ignore all programming changes made since the last time ENTER was pressed.
E3	TABLE	The Table number entered is not consistent with that allowed for the current configuration of the extended non-volatile RAM. Check the configuration number.
E4	ACCESS NUMBER	An attempt was made to enter an Access Number for a common-use table.
E4	NUMBER REDIAL	An attempt was made to enter a Number Redial digit for a common-use table.
E5	ACCESS NUMBER	The Access Number entered already exists for another table assigned to the same equipment number.
E5	NUMBER REDIAL	Number Redial already exists for another table assigned to the same equipment number (only 1 Number Redial attribute per user is allowed).
E6	SPEED CALL	The configuration of the extended non-volatile RAM does not include the Speed Call feature.

TABLE 3-5
EXTENDED PROGRAMMING ERROR CODES - AUTOMATIC ROUTE SELECTION

Error Code	Key Involved	Explanation
E0	All modes	Invalid key pressed.
E1	Area Code Table mode Office Code Table mode Routing Table mode Local Area mode Table Quantity mode	Number is not within range.
E2	All modes	An attempt was made to leave the current mode after parameters were changed, but before ENTER or CANCEL was pressed.
E3	Office Code mode	The Office Code table number is not valid for this configuration.
E4	Routing Table mode	An attempt was made to enter a trunk group number that is not defined.
E5	Office Code Table mode	The 9-entry Office Code Table is full and cannot hold the entry.
E6	Routing Table mode	Schedule A hours and Schedule B hours are not mutually exclusive.
E7	Configuration mode	Configuration is not allowed because the Tone Control card switches are not 7776 or the system is not idle.
E9	Configuration mode	A hardware failure was detected while clearing the extended customer non-volatile RAM.

TABLE 3-6
ATTENDANT FUNCTION ACCESS CODES

These codes assume the use of * as the Attendant Function code (Feature number 18).

To cancel all call forwarding:
a) Dial *1
b) Dial #
c) Press the RELEASE button

+ To make flexible night service assignments:
a) Dial * 3
b) Dial individual trunk access number (equipment number)
c) Press NIGHT 1 or NIGHT 2
d) Dial extension number
e) Press the RELEASE button

To cancel all system callbacks:
a) Dial * 4
b) Dial #
c) Press the RELEASE button

To set the clock:
a) Dial * 5
b) Dial time (hour plus minutes)
c) Dial * for p.m. or # for a.m.
d) Press the RELEASE button

To make Trunk Group attendant access only:
a) Dial * 6
b) Dial Trunk Group (1 through 10)
c) Dial *
d) Press the RELEASE button

To make a trunk group extension and attendant access:
a) Dial * 6
b) Dial Trunk Group (1 through 10)
c) Dial #
d) Press the RELEASE button

To change the Direct Inward System Access code:
a) Dial * 7
b) Dial DISA code
c) Press the RELEASE button

To cancel a minor alarm: (Note 1)
a) Dial * 8
b) Dial #
c) Press the RELEASE button

+ To busy out an individual trunk:
a) Dial * 9
b) Dial individual trunk access number (equipment number)
c) Dial *
d) Press the RELEASE button

+ To de-busy an individual trunk:
a) Dial * 9
b) Dial individual trunk access number (equipment number)
c) Dial #
d) Press the RELEASE button

+ To change the status of all occupied clean rooms to occupied and needs cleaning:
a) Dial * 10
b) Dial *
c) Press the RELEASE button

+ To change the status of all occupied rooms in the need of cleaning to occupied clean: (Note 2)
a) Dial * 10
b) Dial #
c) Press the RELEASE button

To set up call forwarding:
a) Dial * 11nnn, where nnn is the extension number of the forwarding extension
b) Dial call forwarding code (1-4)
c) Dial nnn, where nnn is the number to which the calls are to be forwarded
d) Press the RELEASE button

TABLE 3-6 (CONT'D)
ATTENDANT FUNCTION ACCESS CODES

To cancel call forwarding for an extension:
a) Dial * 11nnn, where nnn is the extension number of the forwarding extension
b) Dial #
c) Press the RELEASE button

+ To busy out an extension:
a) Dial * 12nnn, where nnn is the number of the extension to be busied out
b) Dial *
c) Press the RELEASE button

+ To de-busy an extension:
a) Dial * 12nnn, where nnn is the number of the extension to be de-busied
b) Dial #
c) Press the RELEASE button

+ To suspend the printer:
a) Dial * 14 *
b) Press the RELEASE button

+ To purge and ignore the printer:
a) Dial * 14 00
b) Press the RELEASE button

+ To enable the printer:
a) Dial * 14 #
b) Press the RELEASE button

To change the date:
a) Dial * 15 and 3 or 4 digit date (one or two digit month, two digit day)
b) Press the RELEASE button

+ To print the room audit (registers):
a) Dial * 16
b) Press the RELEASE button

+ To display the system identity:
a) Dial * 17
b) Press the RELEASE button

+ To change the system identity:
a) Dial * 17 nnn (where nnn is a 1 to 3 digit ID, 0-999)
b) Press the RELEASE button

+ To print the "room status" audit (Note 2)
a) Dial * 18
b) Press the RELEASE button

To print all speed call information:
a) Dial * 19 *
b) Press the RELEASE button

To print all customer accessible RAM data:
a) Dial * 19 #
b) Press the RELEASE button

To access an individual trunk:
a) Dial * 20
b) Dial individual trunk access number (equipment number)
c) Dial *
d) Press the RELEASE button

To force-release an individual trunk:
a) Dial *20
b) Dial individual trunk access number (equipment number)
c) Dial # #
d) Press the RELEASE button

Note 1: The errors will be sequentially stacked in the memory and may be recalled sequentially (most recent first) by repeating the above procedure.
Note 2: Printer starts after RELEASE button is pressed
+ Requires system option programming

TABLE 3-7
MAINTENANCE FUNCTION ACCESS CODES

To select any of the functions, the access code assigned for the maintenance function must be dialed (Feature Number 19). The code 555 is used in the following part for the maintenance code and may be dialed from the test line or console.

Clear all errors:
a) Dial 555 + 1

Direct trunk or station access:
a) Dial 555 + 2
b) Dial individual equipment number (3-digit equipment number for trunk or station)

Busy out of a receiver:
a) Dial 555 + 3
b) Dial equipment number of receiver

Busy out of a speech path:
a) Dial 555 + 33
b) Dial speech path number (01-31)

De-busy a receiver:
a) Dial 555 + 4
b) Dial equipment number of receiver

De-busy a speech path:
a) Dial 555 + 43
b) Dial speech path number (01-31)

Initialize card slot:
a) Dial 555 + 5
b) Dial card slot number (01-17, 31-42)

+ System reset:
a) Dial 555 + 6

To initiate system dump (from test line):
a) Dial 555 + 7 and hang up
b) Go off-hook
c) Dial 555 + 8 + # (or 2)

To initiate system dump (from console):
a) Dial 555 + 7
b) Dial * 14 #

To suspend printer (from the test line):
a) Dial 555 + 8 + * (or 1), hang up

To enable printer (from the test line):
a) Dial 555 + 8 + # (or 2), hang up

+ To purge and ignore printer (from the test line):
a) Dial 555 + 8 + 00, hang up

To print all RAM data (from the console):
a) Dial 555 + 9
b) Press the RELEASE button

To suspend the printer (from the console):
a) Dial * 14 *
b) Press the RELEASE button

To enable the printer (from the console):
a) Dial * 14 #
b) Press the RELEASE button

To purge and ignore printer (from the console):
a) Dial * 14 00
b) Press the RELEASE button

+ Requires System Option Programming

Notes

1. For Traffic Measurement Access Codes see MITL9105/9110-097-450-NA.

TABLE 3-8
SYSTEM TIME-OUT INFORMATION

Description	Time-Out
Attendant Timed Recall (Don't Answer)	20 s, 30 s, or 40 s
Attendant Timed Recall (Camp-On)	20 s, 30 s, or 40 s
Attendant Timed Recall (Hold)	20 s, 30 s, or 40 s
Automatic Night Switching	20 s, 30 s, or 40 s
Dial Tone Time-Out	15 s
Interdigit Time-Out (Extensions)	15 s
Interdigit Time-Out (Trunks)	10 s
Lockout Time-Out	45 s
Callback Clear Time-Out	8 hours
Callback Don't Answer Reset	6 rings
Call Park Recall	2, 3 or 4 minutes
Call Hold Recall	2, 3 or 4 minutes
Call Forwarding - Don't Answer Time-Out	10 s, 20 s, 30 s, or 40 s
Switchhook Flash	Min. 200 ms Max. 0.7 s, 0.9 s, 1.1 s or 1.5 s
Ringing Time-Out	5 minutes, 1 minute programmable
Automatic Wake-Up Ringing	6 rings, 3 s each
Automatic Wake-Up Attempts	3 at 5 minute intervals

4. Examples

Introduction

4.01 This part describes the steps required to program the SX-100 and SX-200 PABX's using the Installation Forms, and provides typical examples of completed Installation Forms.

4.02 System Options

Step	Operation
1.	Press the OPTION button.
2.	Dial the number of the required option. (See Tables 2-1 and 2-2)
3.	Press the ADD button to add the option, OR Press the DELETE button to remove the option.
4.	Repeat steps 1, 2, and 3 above until all required options have been added or deleted.
5.	Press the ENTER button to enter all options into the memory.

SYSTEM OPTIONS

OPTION

OPTION NAME	OPTION NUMBER	OPTION DIAL OPTION NUMBER (100-270)	ADD
DISCRIMINATING RINGING	100		
TRANSFER DIAL TONE	101		
FLEXIBLE NIGHT SERVICE	102		
NIGHT SERVICE AUTOMATIC SWITCHING	103		
TAFAS AVAILABLE DURING DAY	104		
OUTGOING TRUNK CAMP ON	105		
OUTGOING TRUNK CALLBACK	106		
CAN FLASH IF TALKING TO AN INCOMING TRUNK	107		
CAN FLASH IF TALKING TO AN OUTGOING TRUNK	108		
CAN FLASH IF TALKING TO A STATION	109		
CANNOT DIAL A TRUNK AFTER FLASHING	110		
CANNOT DIAL A TRUNK AFTER FLASHING IF HOLDING OR IN CONFERENCE WITH A TRUNK	111		
LOCKOUT ALARM ENABLE	112		
TENANT SERVICE (SET AUTOMATICALLY WHEN TENANT SERVICE IS SELECTED WHEN PROGRAMING)	113		
TENANT SERVICE - SEPARATE CONSOLES	114		
VACANT NUMBER INTERCEPT TO ATTENDANT	115		
ILLEGAL ACCESS INTERCEPT TO ATTENDANT	116		
DID/DIAL-IN/CCSA VACANT/ILLEGAL INTERCEPT TO ATTENDANT	117		
ATTENDANT CAMP ON	118		
ATTENDANT CONFERENCE	119		
ATTENDANT BUSY OVERRIDE	120		
ATTENDANT SERIAL CALL	121		
BELL OFF ENABLE	122		
PAGE BUTTON ENABLE	123		
NEW CALL TONE ENABLE	124		
BOTH MODE STANDARD	125		
CALLBACK BUTTON ENABLE	126		
TRUNK BUSY - OUT ENABLE	127		
BOTH BUTTON ENABLE	128		

OPTION NAME	OPTION NUMBER	OPTION DIAL OPTION NUMBER (100-270)	ADD
ATTENDANT CO TRUNK CO TRUNK CONNECT ENABLE	129		
ATTENDANT CO TRUNK-NON CO TRUNK CONNECT ENABLE	130		
ATTENDANT NON CO TRUNK - NON CO TRUNK CONNECT ENABLE	131		
CONTROLLED OUTGOING RESTRICTION SETUP	132		
CONTROLLED STATION RESTRICTION SETUP	133		
CONTROLLED STATION TO STATION RESTRICTION SETUP	134		
ATTENDANT [illegible] CODE SETUP ENABLE	135		
LIMITED [illegible] DIAL TONE	136		
MF [illegible]ING SETUP (LAMP)	137		
[illegible] WAITING SETUP (BELL)	138		
[illegible]NDANT TIMED RECALL - CAMP ON 20 SEC	139		
ATTENDANT TIMED RECALL - CAMP ON 40 SEC.	140		
ATTENDANT TIMED RECALL - DONT ANSWER 20 SEC	141		
ATTENDANT TIMED RECALL - DONT ANSWER 40 SEC	142		
ATTENDANT TIMED RECALL - HOLD 20 SEC	143		
ATTENDANT TIMED RECALL - HOLD 40 SEC.	144		
NIGHT SERVICE TIME - OUT 20	145		
NIGHT SERVICE TIME - OUT 40	146		
CALL FORWARDING - DONT ANSWER TIMEOUT 20 SEC.	147		
CALL FORWARDING - DONT ANSWER TIMEOUT 40 SEC.	148		
CALL FORWARDING - BUSY (SYSTEM, DID, DIAL-IN TIE TRUNK, CCSA)	149		
CALL FORWARDING - DONT ANSWER (SYSTEM, DID DIAL-IN TIE TRUNK, CCSA)	150		
PARK AND CALL - HOLD RECALL 2 MINUTES	151		
PARK AND CALL - HOLD RECALL 4 MINUTES	152		
END OF DIAL SIGNAL FOR OUTGOING TRUNKS #.	153		
24 HOUR CLOCK	154		
FIRST DIGIT TOLL DENY	155		
MESSAGE RESTRICTION ENABLE	156		
MESSAGE REGISTRATION: COUNT ADDITIONAL SUPERVISIONS	157		

EXAMPLE ONLY

SYSTEMS OPTION [OPTION]

OPTION NAME	OPTION NUMBER (OPTION — DIAL OPTION NUMBER (100-270))	ADD
MESSAGE REGISTRATION: TIMER = 20 SECONDS	158	
MESSAGE REGISTRATION: TIMER = 40 SECONDS	159	
MESSAGE REGISTRATION: MULTIPLIER = 4 UNITS	160	
MESSAGE REGISTRATION: MULTIPLIER = 3 UNITS	161	
MESSAGE REGISTRATION: MULTIPLIER = 2 UNITS	162	
MESSAGE REGISTRATION: SURCHARGE = 8 UNITS	163	
MESSAGE REGISTRATION: SURCHARGE = 7 UNITS	164	
MESSAGE REGISTRATION: SURCHARGE = 6 UNITS	165	
MESSAGE REGISTRATION: SURCHARGE = 5 UNITS	166	
MESSAGE REGISTRATION: SURCHARGE = 4 UNITS	167	
MESSAGE REGISTRATION: SURCHARGE = 3 UNITS	168	
MESSAGE REGISTRATION: SURCHARGE = 2 UNITS	169	
MESSAGE REGISTRATION: SURCHANGE = 1 UNITS	170	
DID TO NON-CO TRUNKS VIA ATTENDANT INHIBIT	171	
GUEST ROOM BUTTON ENABLE	172	
ROOM STATUS BUTTON ENABLE & DISPLAY ENABLE	173	
DO NOT DISTURB INTERCEPT TO ATTENDANT	174	
DO NOT DISTURB AND MESSAGE WAITING DISPLAYS	175	
SINGLE DIGIT DIALING ENABLE	176	
SINGLE DIGIT DIALING TIME - OUT = 3 SECONDS	177	
SINGLE DIGIT DIALING TIME - OUT = 5 SECONDS	178	
ATTENDANT STATION BUSY - OUT ENABLE	179	
FLASH TIMING = 0.7 SECONDS	180	
FLASH TIMING = 0.9 SECONDS	181	
FLASH TIMING = 1.1 SECONDS	182	
TRUNK RECALL PARTIAL INHIBIT	183	
RESERVED	184	
RESERVED	185	
RESERVED	186	
RESERVED	187	
RESERVED	188	
RESERVED	189	
AUTOMATIC WAKE - UP ENABLE	190*	

OPTION NAME	OPTION NUMBER (OPTION — DIAL OPTION NUMBER (100-270))	ADD
AUTOMATIC WAKE - UP PRINT	191	
AUTOMATIC WAKE - UP MUSIC ON HOLD	192	
ROOM MESSAGE REGISTER AUDIT ENABLE	193	
ROOM STATUS AUDIT ENABLE	194	
MESSAGE REGISTER & MESSAGE WAITING CHANGE PRINT ENABLE	195	
IGNORE PRINT ENABLE	196	
REMOTE SYSTE[illegible] RESET - PROTECTION OVERRIDE	197	
EXTENSIO[illegible] TRUNK TO TRUNK CONNECT ENABLE	198	
MUL[illegible] CONTROL ENABLE	199	
[illegible]ASUREMENT ENABLE	200	
[illegible] MEASUREMENT EXTREME VALUE MODE	201	
TRAFFIC MEASUREMENT COMPACT REPORT	202	
TRAFFIC MEASUREMENT POLLING	203	
TRAFFIC MEASUREMENT AUTOPRINT	204	
IDENTIFIED TRUNK GROUP ENABLE	205	
INHIBIT AUTOMATIC SUPERVISION	206	
PRINT CARRIAGE RETURN DELAY	207	
ZERO MESSAGE REGISTER AFTER ROOM REGISTER AUDIT	208	
TRAFFIC MEASUREMENT: CONSOLE FUNCTION ENABLE	209	
ATTENDANT PRINTER CONTROL ENABLE	210	
SYSTEM ID ENABLE	211	
NIGHTBELL 3 WITH MINOR ALARM ENABLE	212	
PRINTOUTS: EXTRA LINE FEEDS	213	
WAKE UP ALARM ENABLE	214	
RESERVED	215	
SPEED CALL ENABLE	216	
SPEED CALL PROGRAMMING ENABLE	217	
SPEED CALL CONFIDENTIAL NUMBER DISPLAY ENABLE	218	
RESERVED	219	
STATION MESSAGE DETAIL RECORDING OUTGOING CALLS	220	
STATION MESSAGE DETAIL RECORDING INCOMING CALLS	221	

EXAMPLE ONLY

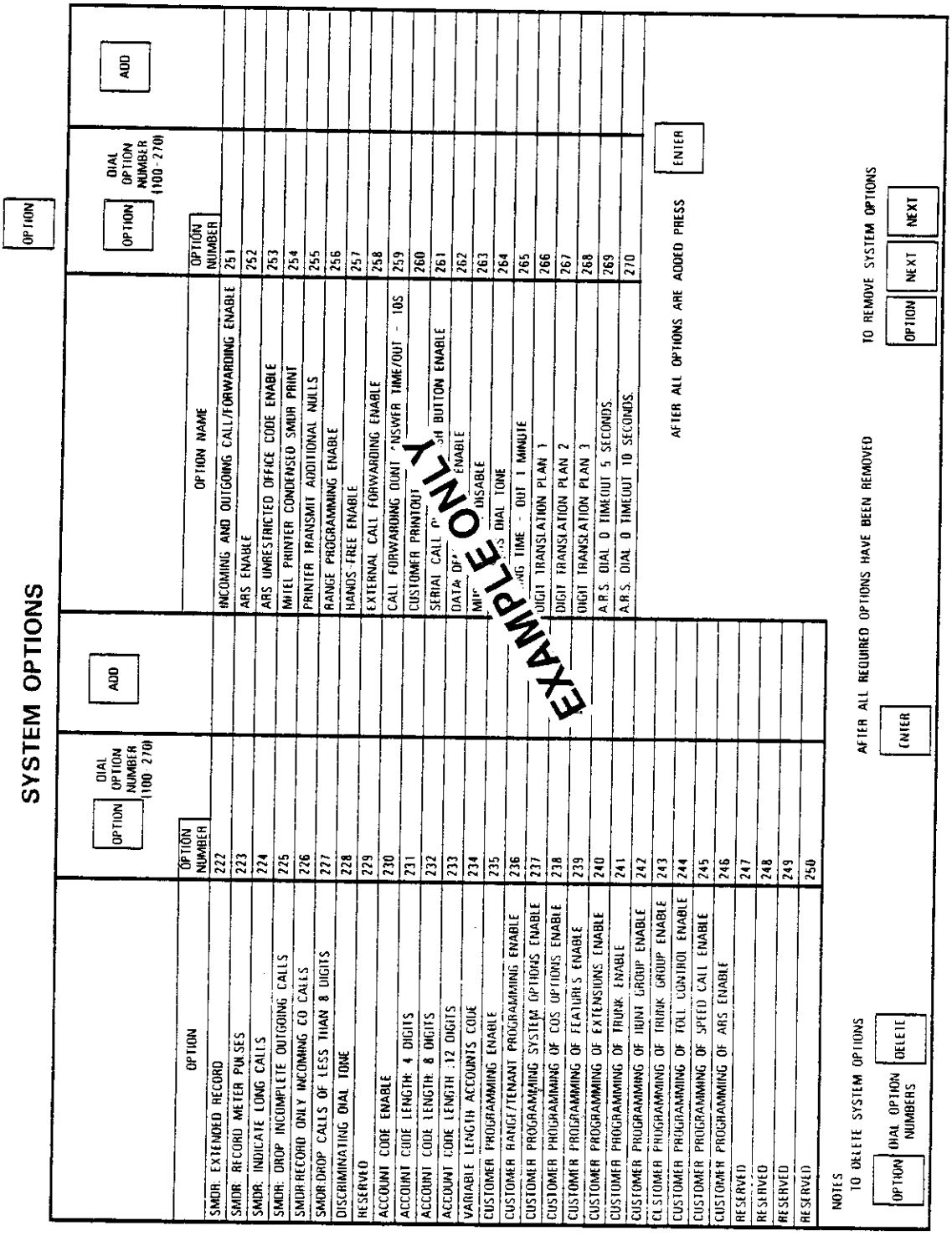
SYSTEM OPTIONS
OPTION
OPTION
DIAL OPTION NUMBER (100-270)
ADD
OPTION
OPTION NUMBER
OPTION NAME
OPTION
DIAL OPTION NUMBER (100-270)
ADD
OPTION NUMBER
OPTION NAME
222 223 224 225 226 227 228 229 230 231 232 233 234 235 236 237 238 239 240 241 242 243 244 245 246 247 248 249 250
INCOMING AND OUTGOING CALL FORWARDING ENABLE
ARS ENABLE
ARS UNRESTRICTED OFFICE CODE ENABLE
MITEL PRINTER CONDENSED SMDR PRINT
PRINTER TRANSMIT ADDITIONAL NULLS
RANGE PROGRAMMING ENABLE
HANDS-FREE ENABLE
EXTERNAL CALL FORWARDING ENABLE
CALL FORWARDING DONT ANSWER TIME/OUT - 10S
CUSTOMER PRINTOUT
SERIAL CALL P
DATA OP ENABLE
MF DISABLE
DIGIT TRANSLATION PLAN 1
DIGIT TRANSLATION PLAN 2
DIGIT TRANSLATION PLAN 3
A.R.S. DIAL 0 TIMEOUT 5 SECONDS.
A.R.S. DIAL 0 TIMEOUT 10 SECONDS.
251 252 253 254 255 256 257 258 259 260 261 262 263 264 265 266 267 268 269 270
EXAMPLE ONLY
AFTER ALL OPTIONS ARE ADDED PRESS
ENTER
NOTES
TO DELETE SYSTEM OPTIONS
OPTION
DIAL OPTION NUMBERS
DELETE
AFTER ALL REQUIRED OPTIONS HAVE BEEN REMOVED
ENTER
TO REMOVE SYSTEM OPTIONS
OPTION
NEXT
NEXT

4.03 COS Options

Step	Operation
1.	Press the COS DEFINE button.
2.	Dial the number of the COS required (1 through 16).
3.	Press the OPTION button.
4.	Dial the number of the extension option required to be added or deleted to the COS selected in step 2. (See CLASS-OF-SERVICE DEFINITIONS).
5.	Press the ADD button to add the option to the selected COS. OR Press the DELETE button to remove the option from the selected COS.
6.	Repeat steps 3, 4, and 5 until all required extension options have been added or deleted to the selected COS.
7.	Press the ENTER button to enter all COS options into the memory.
8.	Repeat steps 1 through 7 for the next required COS.

MITEL

PRESS [COS DEFINE] DIAL COS NUMBER 1-16 TO CHANGE ANY OPTION FOR A COS 1-16, PRESS [OPTION] DIAL OPTION NUMBER 33-101 PRESS [ADD] TO ENABLE OR PRESS [DELETE] TO REMOVE

OPTION NO	1	2	3	4	5	6	7	8	9	10	11	12	13	14	15	16	OPTION NO	OPTION NAME
33																	33	AUTOMATIC CALLBACK
34																	34	CALL FORWARDING - BUSY
35																	35	CALL FORWARDING - DONT ANSWER
36																	36	CALL FORWARDING - FOLLOW ME
37																	37	CALL PARK
38																	38	NEVER A FORWARDEE
39																	39	DIRECTED CALL PICKUP
40																	40	EXECUTIVE BUSY OVERRIDE
41																	41	DATA SECURITY
42																	42	STATION OVERRIDE SECURITY
43																	43	INWARD RESTRICTION (DID)
44																	44	ORIGINATE ONLY
45																	45	RECEIVE ONLY
46																	46	FLASH DISABLE
47																		NEVER A CONSULTEE
48																		BROKERS CALL
49																		STATION CONFERENCE
50																		MEET ME CONFERENCE
51																	51	CAMP ON
52																	52	DO NOT OVERFLOW
53																	53	PAGING ACCESS
54																	54	TAFAS ACCESS
55																	55	HOLD PICKUP
56																	56	ACCOUNT CODE ACCESS
57																	57	MANUAL LINE
58																	58	CONTACT MONITOR
59																	59	NON CO TRUNKS VIA ATTENDANT INHIBIT
60																	60	CO TRUNKS VIA ATTENDANT INHIBIT
61																	61	NO DIAL TONE
62																	62	FLASH FOR ATTENDANT
63																	63	H/M STN STN RESTRICT APPLIES
64																	64	MESSAGE REGISTER
65																	65	TRUNK GROUP 1 ACCESS
66																	66	TRUNK GROUP 2 ACCESS
67																	67	TRUNK GROUP 3 ACCESS
68																	68	TRUNK GROUP 4 ACCESS
69																	69	TRUNK GROUP 5 ACCESS
70																	70	TRUNK GROUP 6 ACCESS
71																	71	TRUNK GROUP 7 ACCESS
72																	72	TRUNK GROUP 8 ACCESS
73																	73	TRUNK GROUP 9 ACCESS
74																	74	TRUNK GROUP 10 ACCESS
75																	75	TRUNK GROUP 11 ACCESS
76																	76	TRUNK GROUP 12 ACCESS

EXAMPLE ONLY

CLASS OF SERVICE OPTIONS
PRESS COS DEFINE
DIAL COS NUMBER 1 16
TO CHANGE ANY OPTION FOR A COS 1 16 PRESS OPTION DIAL OPTION NUMBER 33-101 PRESS ADD TO ENABLE OR PRESS DELETE TO REMOVE
REPEAT FOR EACH OPTION IN THE COS
OPTION NO 1 2 3 4 5 6 7 8 9 10 11 12 13 14 15 16 OPTION NO OPTION NAME
77 MESSAGE WAITING APPLIES
78 ROOM DO NOT DISTURB ENABLE
79 CALL HOLD AND RETRIEVE ACCESS
80 ROOM STATUS APPLIES
81 CALL FORWARDING SYSTEM INHIBIT
82 ALARM CALL ENABLE
83 FORCED ACCOUNT CODE ENTRY
84 NO CAMP ON RECORD APPLIES
85 SPEED CALL TABLE 1&2 ACCESS
86 SPEED CALL TABLE 3&4 ACCESS
87 SPEED CALL TABLE 5&6 ACCESS
88 SPEED CALL TABLE 7&8 ACCESS
89 SPEED CALL TABLE 9&10 ACCESS
90 SPEED CALL TABLE 11&12 ACCESS
91 SPEED CALL TABLE 13&14 ACCESS
92 SPEED CALL TABLE 15&16 ACCESS
93 SPEED CALL TABLE 17&18 ACCESS
94 CANNOT DIAL A TRUNK AFTER FLASHING
95 INCOMING TRUNK ROTARY DIAL ONLY
96 ARS RESTRICTED
97 EXTERNAL CALL FORWARDING ENABLE
98 TRANSFER WITH PRIVACY
99 HANDS - FREE STATION
100 ARS ALLOWED
101 EARTH GROUND BUTTON
EXAMPLE ONLY
TO REVIEW THE OPTIONS WITHIN A COS
PRESS ENTER
COS DEFINE
DIAL COS NUMBER
OPTION
NEXT
NEXT
NOTES YOU CANNOT CHANGE AN EXTENSION OR TRUNK IF THE EXTENSION OR TRUNK IS BUSY, HAS MESSAGE WAITING OR DO NOT DISTURB SET IT ALSO CANNOT BE CHANGED UNLESS MESSAGE REGISTER IS CLEARED
MITEL

4.04 Features

Step	Operation
1.	Press the FEATURE button.
2.	Dial the number of the required feature. (See FEATURE ASSIGNMENTS TABLE 2-4)
3.	Press the ACCESS CODE button.
4.	Dial the access code to be assigned to the feature. OR Press the DELETE button to remove an access code.
5.	Press the ENTER button to enter information into the memory.
6.	Repeat steps 1 through 5 until all required access codes have been assigned or deleted.

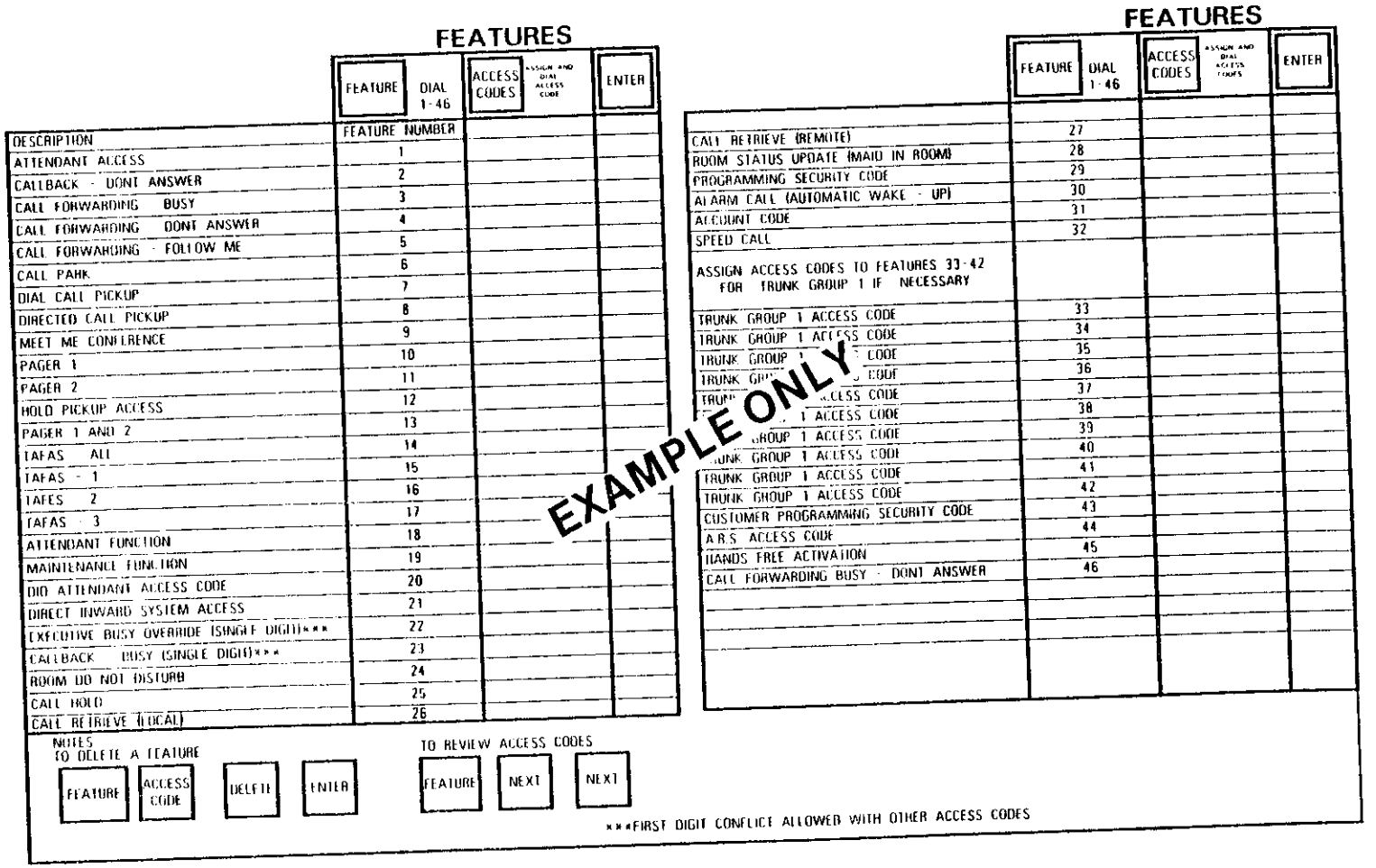
FEATURES
FEATURE DIAL 1-46
ACCESS CODES ASSIGN AND DIAL ACCESS CODE
ENTER
DESCRIPTION
FEATURE NUMBER
ATTENDANT ACCESS 1
CALLBACK - DONT ANSWER 2
CALL FORWARDING BUSY 3
CALL FORWARDING DONT ANSWER 4
CALL FORWARDING - FOLLOW ME 5
CALL PARK 6
DIAL CALL PICKUP 7
DIRECTED CALL PICKUP 8
MEET ME CONFERENCE 9
PAGER 1 10
PAGER 2 11
HOLD PICKUP ACCESS 12
PAGER 1 AND 2 13
TAFAS ALL 14
TAFAS - 1 15
TAFES 2 16
TAFAS - 3 17
ATTENDANT FUNCTION 18
MAINTENANCE FUNCTION 19
DID ATTENDANT ACCESS CODE 20
DIRECT INWARD SYSTEM ACCESS 21
EXECUTIVE BUSY OVERRIDE (SINGLE DIGIT)*** 22
CALLBACK BUSY (SINGLE DIGIT)*** 23
ROOM DO NOT DISTURB 24
CALL HOLD 25
CALL RETRIEVE (LOCAL) 26
CALL RETRIEVE (REMOTE) 27
ROOM STATUS UPDATE (MAID IN ROOM) 28
PROGRAMMING SECURITY CODE 29
ALARM CALL (AUTOMATIC WAKE - UP) 30
ACCOUNT CODE 31
SPEED CALL 32
ASSIGN ACCESS CODES TO FEATURES 33-42 FOR TRUNK GROUP 1 IF NECESSARY
TRUNK GROUP 1 ACCESS CODE 33
TRUNK GROUP 1 ACCESS CODE 34
TRUNK GROUP 1 ACCESS CODE 35
TRUNK GROUP 1 ACCESS CODE 36
TRUNK GROUP 1 ACCESS CODE 37
TRUNK GROUP 1 ACCESS CODE 38
TRUNK GROUP 1 ACCESS CODE 39
TRUNK GROUP 1 ACCESS CODE 40
TRUNK GROUP 1 ACCESS CODE 41
TRUNK GROUP 1 ACCESS CODE 42
CUSTOMER PROGRAMMING SECURITY CODE 43
A.R.S. ACCESS CODE 44
HANDS FREE ACTIVATION 45
CALL FORWARDING BUSY - DONT ANSWER 46
EXAMPLE ONLY
NOTES
TO DELETE A FEATURE
FEATURE
ACCESS CODE
DELETE
ENTER
TO REVIEW ACCESS CODES
FEATURE
NEXT
NEXT
***FIRST DIGIT CONFLICT ALLOWED WITH OTHER ACCESS CODES

4.05 Extensions

Step	Operation
	If TENANT service is used, commence at Step 1. If TENANT service is not used, start at Step 4 (Note 1).
1.	Press the TENANT button.
2.	Dial required tenant number (1, 2, 3 or 4).
3.	Press the ENTER button.
4.	Press the EXTN button.
5.	Press the EQPT NUMBER button.
6.	Dial the required equipment number (see EQUIPMENT NUMBERING, Fig. 2-1).
7.	Press the EXTN NUMBER button.
8.	Dial the required extension number OR Press the DELETE button to remove existing extension information.
9.	Press the COS Number button.
10.	Dial the required COS number (1 through 16).
11.	Press the TOLL DENY button. (See Note 2)
12.	Press the ADD button to implement toll denial for the extension selected OR Press the DELETE button to remove toll denial for the extension selected.
13.	Press the BUSY LAMP NUMBER button.
14.	Dial the number of the busy lamp which is associated with the selected extension. (see BUSY LAMP POSITION NUMBERING, Fig. 2-2) OR Press the DELETE button if no busy lamp is required.
15.	Press the PICKUP GROUP button.
16.	Dial the number of the required pickup group (1 through 30) OR Press the DELETE button if no pickup group assignment is required.
17.	Press the ENTER button to enter all extension information into the memory.
18.	Repeat steps 1 through 18 or 4 through 18 for all required extensions.

Notes:
1. All extensions in one tenant group should be entered in succession following the listed steps. The next group of extensions are entered in a similar manner using the TENANT and ENTER buttons again.
2. For Multi Digit Toll Control, see Section MITL9105/9110-097-212-NA Programming Procedures.

EXTENSION

IF TENANT SERVICE IS IN USE
ALL ENTRIES MADE ARE ASSIGNED TO THE TENANT NUMBER DIALED [TENANT] DIAL 1-4 [ENTER]

TO ENTER EXTENSION PROGRAMMING PRESS [EXTN]

TENANT								
NAME	[EQPT NUMBER] DIAL 1-112 OR 161-256 (SEE NOTE 1)	[EXTN NUMBER] DIAL CODE OR SEE NOTES 2,3, OR 4	[COS NUMBER] DIAL 1-16	[TOLL DENY] [ADD] OR DIAL C OR CODE 1,2 OR 3 OR [TOLL DENY] [DELETE] TOLL ALLOW (SEE NOTES 5)	[BUSY LAMP NUMBER] DIAL BUSY LAMP NUMBER 1-200 [DELETE]	[PICKUP GROUP] DIAL 1-30 OR [DELETE]	[ENTER]
	001	200	1	1	1	1	
	002	201	1	1	2	1	
	003	202	2	3	3	DELETE	
	004	203	2	3	4	DELETE	
	005	204	2	3	5	DELETE	
	006	301	2	3	31	DELETE	
	007	302	2	[illegible]	32	DELETE	
	008	303	2	[illegible]D	33	DELETE	
	009	304	2	ADD	34	DELETE	
	010	305	2	ADD	35	DELETE	
	011	2 #	2	DELETE	40	DELETE	

EXAMPLE ONLY

NOTES

1. EQUIPMENT NUMBERS 161-256 APPLIES TO SX-200 ONLY
2. TO ASSIGN NON CONFLICTING SINGLE DIGIT DIRECTORY NUMBER, ENTER N# WHERE N IS THE SINGLE DIGIT
3. TO REMOVE EXTENSION PROGRAMMING

   [EXTN] [EQPT NUMBER] DIAL EQUIPMENT NUMBER [EXTN NUMBER] [DELETE]

   (EXTENSION MUST BE REMOVED FROM ANY HUNT GROUP BEFORE REMOVING THE EXTENSION PROGRAMMING

4. TO SEE THE NEXT EQPT NUMBER ASSIGNED AS AN EXTENSION [EQPT NUMBER] [NEXT]
5. COR 1-3 APPLIES ONLY IF MULTI - DIGIT TOLL CONTROL IS USED

MITEL

EXTENSION RANGE PROGRAMMING

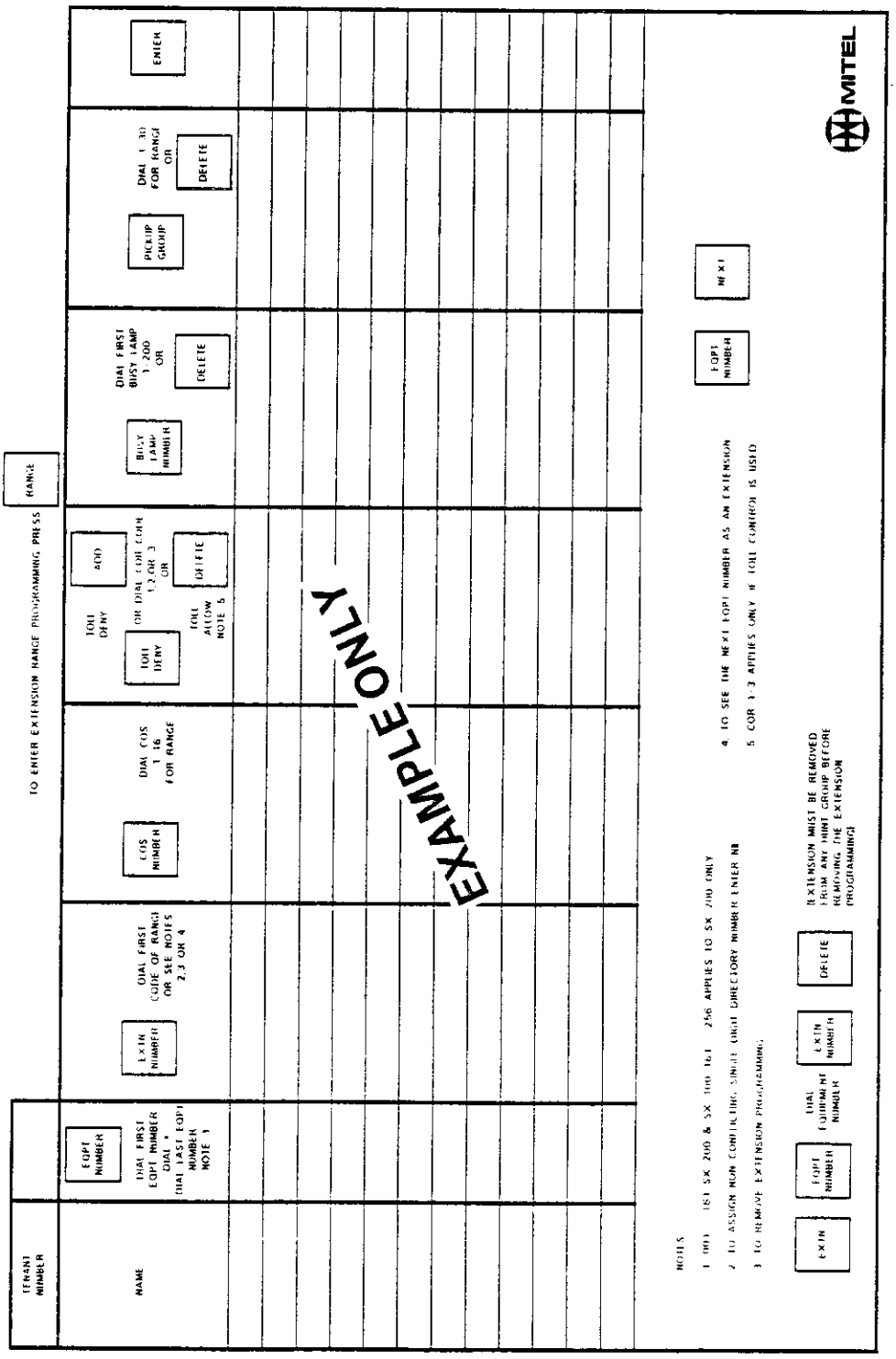

4.06 Hunt Groups

Step	Operation
	If TENANT service is used, commence at Step 1. If TENANT service is not used, start at Step 4. (Note 1)
1.	Press the TENANT button.
2.	Dial the required tenant number (1, 2, 3 or 4).
3.	Press the ENTER button.
4.	Press the HUNT GROUP button.
5.	Dial the number of the required hunt group (1 through 12).
6.	Press the ACCESS CODE button.
7.	Dial the required ACCESS CODE (master number).
	OR
	Press the DELETE button to remove an existing hunt group.
8.	Press the EQPT NUMBER button.
9.	Dial the equipment number of the first extension in the hunt group.
10.	Press the EQPT NUMBER button.
11.	Dial the equipment number of the next extension in the hunt group.
12.	Repeat steps 10 and 11 until all required extensions have been dialed.
13.	Press the ENTER button to enter all hunt group information into the memory.
14.	Repeat steps 1 through 13 for all required hunt groups.

Notes:
1. All extensions in one tenant group should be entered in succession following the listed steps. The next group of extensions are entered in a similar manner using the TENANT and ENTER buttons again.
2. If the hunt group is to be a circular hunt group, then the first equipment number entered must be reentered as the last number.

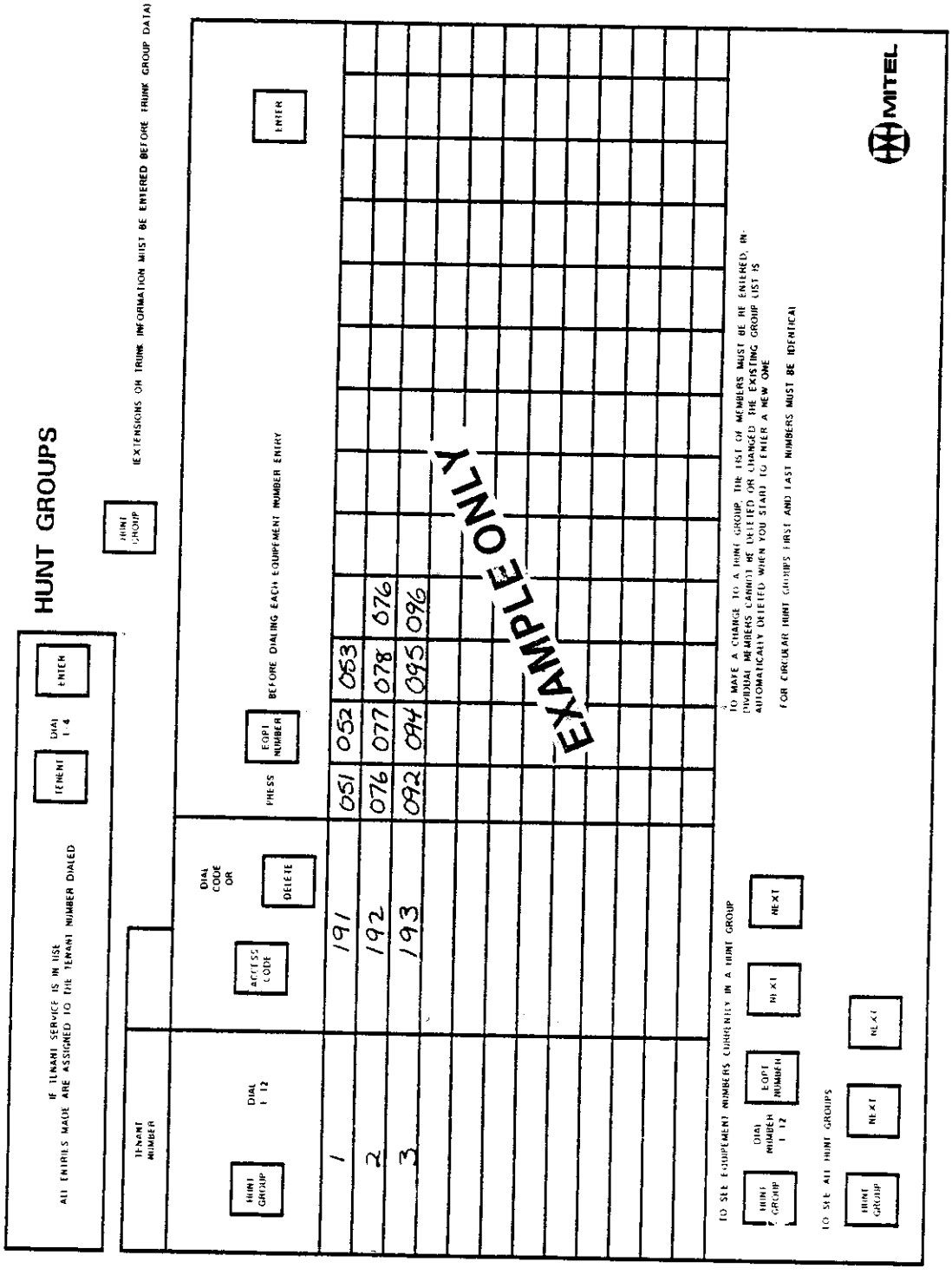
HUNT GROUPS
IF TENANT SERVICE IS IN USE
ALL ENTRIES MADE ARE ASSIGNED TO THE TENANT NUMBER DIALED
TENANT
DIAL 1-4
ENTER
HUNT GROUP
EXTENSIONS OR TRUNK INFORMATION MUST BE ENTERED BEFORE TRUNK GROUP DATA
TENANT NUMBER
HUNT GROUP
DIAL 1-12
ACCESS CODE
DIAL CODE OR
DELETE
PRESS
EQPT NUMBER
BEFORE DIALING EACH EQUIPMENT NUMBER ENTRY
ENTER
1
2
3
191
192
193
051
076
092
052
077
094
053
078
095
076
096
EXAMPLE ONLY
TO MAKE A CHANGE TO A HUNT GROUP, THE LIST OF MEMBERS MUST BE RE ENTERED. IN-
DIVIDUAL MEMBERS CANNOT BE DELETED OR CHANGED. THE EXISTING GROUP LIST IS
AUTOMATICALLY DELETED WHEN YOU START TO ENTER A NEW ONE
FOR CIRCULAR HUNT GROUPS FIRST AND LAST NUMBERS MUST BE IDENTICAL
TO SEE EQUIPMENT NUMBERS CURRENTLY IN A HUNT GROUP
HUNT GROUP
DIAL NUMBER 1-12
EQPT NUMBER
NEXT
NEXT
TO SEE ALL HUNT GROUPS
HUNT GROUP
NEXT
NEXT
MITEL

4.07 Trunks

(a) Trunk Card Settings
Before programming the trunk circuits the Installation Forms which detail the trunk card switch settings must have been completed, and the switches on these cards set to their proper positions. Full details of the switch setting procedures are given in Appendix 5 to Section MITL9105/9110-097-200-NA. Typical configurations are shown in the following examples.

CO TRUNK CARD SWITCH SETTINGS: The example shown has the following meanings:

Trunk 1 – Trunk is active with a ground start configuration

Trunk 2 – Trunk is the same configuration as Trunk 1

Trunk 3 – Trunk is similar to Trunk 1 but is a spare trunk

Trunk 4 – Trunk is a dictation trunk with loop start and the 3rd wire condition active

DID/TIE TRUNK CARD SWITCH SETTINGS: The example shown has the following meanings:

Trunk 1 – Trunk is a loop tie trunk with no wink or "stop– dial" requirements

Trunk 2 – Trunk is a DID/Tie trunk with no wink or "stop–dial" requirements and uses loop pulsing

TRUNK CARD SWITCH SETTINGS - CO TRUNK CARDS

CARD SLOT NO.	CO DIRECTORY NO.	SELF NO. 1	SELF NO. 2	CARD TRUNK NUMBER	TRUNK EQPT NUMBER	INCOMING CONDITION: BUSY	INCOMING CONDITION: IDLE	OUTGOING CONDITION: BUSY	OUTGOING CONDITION: IDLE	LOOP/GND START: LOOP	LOOP/GND START: GND	3RD WIRE CONDITION: ENAB	3RD WIRE CONDITION: DIS	SENSE REVERSALS: IGN	SENSE REVERSALS: REV	RELEASE TIME: "B" SHRT	RELEASE TIME: "A" LONG	RELEASE TIME: "A" SHRT	RELEASE TIME: "A" LONG	M/B RATIO: 33/66	M/B RATIO: 40/60	XT: GND	XT: -48V	HI-Z: HI-Z	HI-Z: NORM
1	592-2121	✓		1		✓			✓		✓						✓			✓		✓			✓
2	592-2123	✓		2		✓			✓								✓			✓		✓			✓
3	SPARE	✓		3			✓	✓					✓	✓			✓			✓		✓			✓
4	DICTATION	✓		4		✓						✓		✓			✓			✓		✓			✓

EXAMPLE ONLY

NOTES

1. EARLIER TRUNK CARD VERSIONS DO NOT HAVE ALL SWITCHES LISTED ABOVE.
2. CHECK APPROPRIATE COLUMN E.G. "BUSY" OR "IDLE" FOR DESIRED SETTING.
3. SEE SECTION MITL9105/9110-097-200-NA APPENDIX 5 FOR PROCEDURES USED IN SETTING TRUNK CARD SWITCHES.

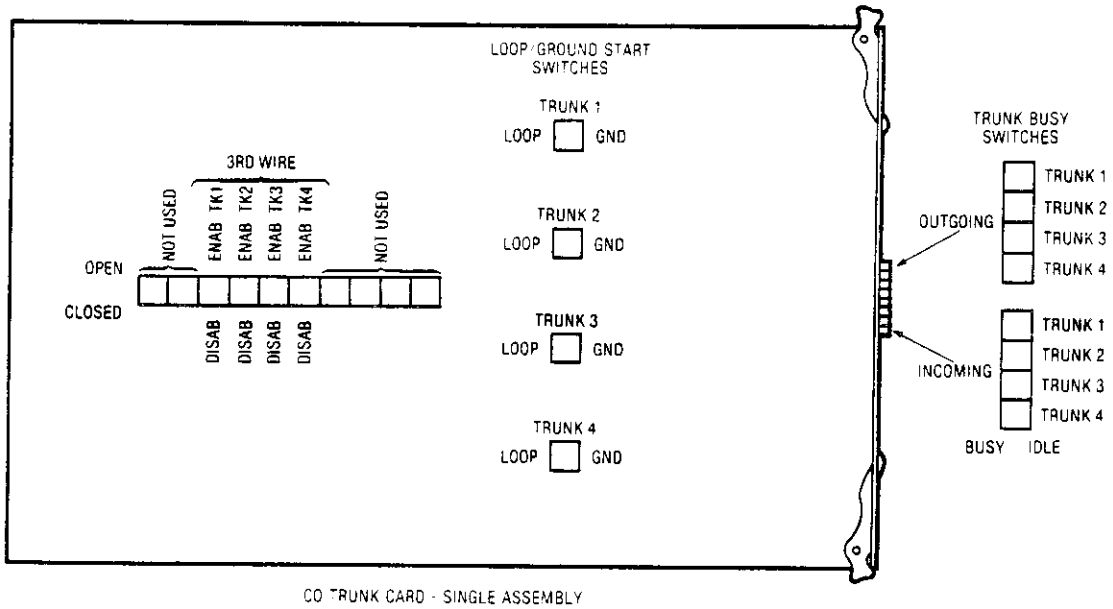

CO TRUNK CARD - SINGLE ASSEMBLY
(TYPE 011)

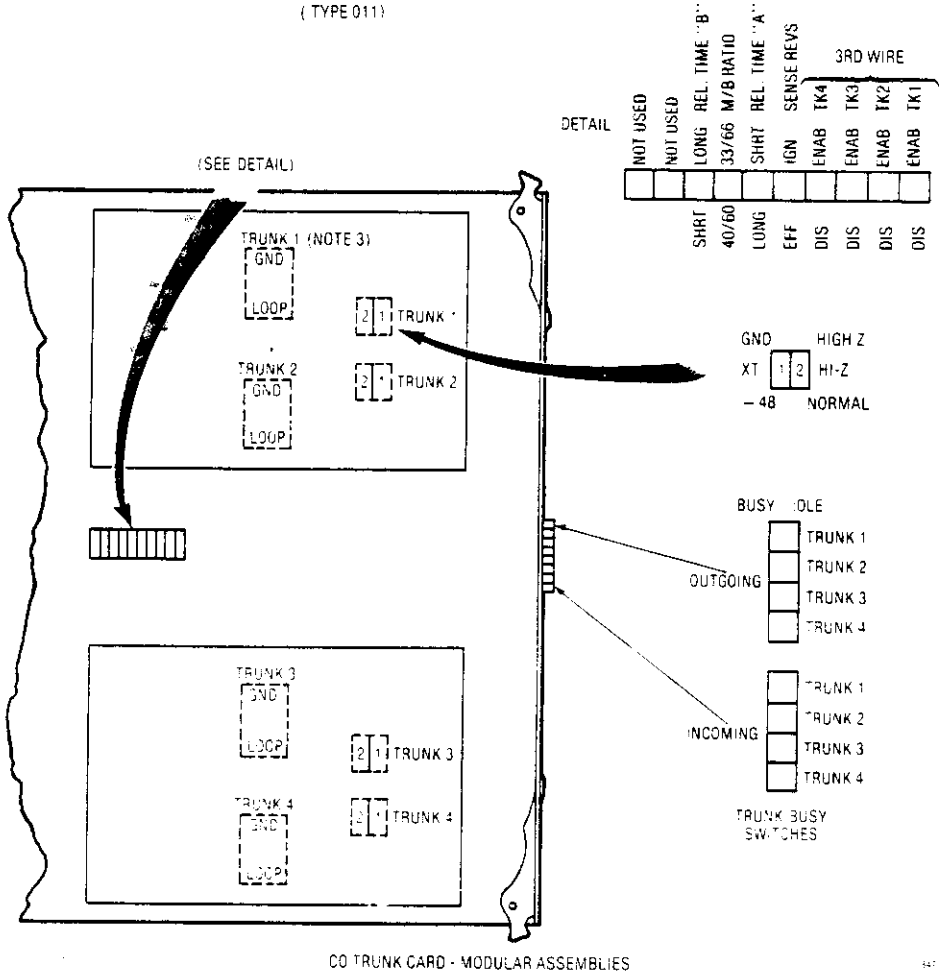

CO TRUNK CARD - MODULAR ASSEMBLIES

CO TRUNK CARD SWITCH IDENTIFICATION

TRUNK CARD SWITCH SETTING - DID/TIE TRUNK CARD

CIRCUIT REFERENCE NUMBERS
TRUNK 1 . . . . . .
TRUNK 2 . . . . . .
SHELF NUMBER 1
CARD SLOT NUMBER 12
TRUNK CARD 2

SWITCH SETTINGS		TRUNK 1	TRUNK 2
EQPT NUMBER			
INCOMING CONDITIONS	BUSY	✓	✓
	IDLE		
OUTGOING CONDITIONS	BUSY		
	IDLE	✓	✓
SWITCH "A" SETTING	CLOSED	✓	✓
	OPEN		
SWITCH "B" SETTING	CLOSED		✓
	OPEN	✓	
INCOMING WINK	WINK		
	NO WINK	✓	✓
OUTGOING WINK	WINK		
	NO WINK	✓	✓
TRUNK IMPEDANCE SWITCHES (3)	900	✓	✓
	600		
PULSING CONDITION	BATTERY/GROUND LOOP		
		✓	✓
DIALING CONDITIONS	STOP DIAL		
	NOT STOP DIAL	✓	✓

CIRCUIT REFERENCE NUMBERS
TRUNK 1 . . . . . .
TRUNK 2 . . . . . .
SHELF NUMBER . . . . . .
CARD SLOT NUMBER . . . . . .
TRUNK CARD . . . . . .

SWITCH SETTINGS		TRUNK 1	TRUNK 2
EQPT NUMBER			
INCOMING CONDITIONS	BUSY		
	IDLE		
OUTGOING CONDITIONS	BUSY		
	IDLE		
SWITCH "A" SETTING			
	OPEN		
SETTING	CLOSED		
	OPEN		
INCOMING WINK	WINK		
	NO WINK		
OUTGOING WINK	WINK		
	NO WINK		
TRUNK IMPEDANCE SWITCHES (3)	900		
	600		
PULSING CONDITION	BATTERY/GROUND LOOP		
DIALING CONDITIONS	STOP DIAL		
	NOT STOP DIAL		

EXAMPLE ONLY

NOTES: 1. TRUNK CARD SWITCHES MUST BE SET TO ONE POSSIBLE SETTING FOR EACH SWITCH AS DETAILED IN SECTION MITL 9105, 9110-097-200-NA APPENDIX 5 MAP 200-503

(b) Non Dial-In Trunks

Step	Operation
	If TENANT service is used, commence at step 1. If TENANT service is not used, start at step 4 (Note 1).
1.	Press the TENANT button.
2.	Dial the required tenant number (1, 2, 3 or 4).
3.	Press the ENTER button.
4.	Press the TRUNK button.
5.	Press the EQPT NUMBER button.
6.	Dial the equipment number to be associated with the required trunk (see EQUIPMENT NUMBERING, Fig. 2-1)
7.	Press the TYPE button.
8.	Dial the required trunk type number (1-Standard Bothway CO Trunk VNL, 5 - Non Dial-In Tie Trunk VNL, 11 Standard Bothway CO Trunk Non VNL and 51 - Non Dial-In Tie Trunk Non VNL). OR Press the DELETE button to delete all trunk information.
9.	Press the LDN NUMBER button.
10.	Dial the number of LDN button with which the trunk is to be associated. (1 through 4)
11.	Press the DAY NUMBER button.
12.	Dial equipment number, or # (night bell number), or * (hunt group number).
13.	Press the NIGHT 1 button.
14.	Dial equipment number or # (night bell number), or * (hunt group number).
15.	Press the NIGHT 2 button.
16.	Dial equipment number, or # (night bell number), or * (hunt group number).
17.	Press the BUSY LAMP NUMBER button.
18.	Dial the number of the busy lamp to be associated with the trunk (see BUSY LAMP POSITION NUMBERING, Fig. 2-2) OR Press the DELETE button if no busy lamp is required.
19.	Press the ENTER button to enter all trunk information into the memory.
20.	Repeat steps 1 through 20 for all trunks required.

Notes:
1. All trunks in one tenant group should be entered in succession following the listed steps. The next group of trunks are entered in a similar manner using the TENANT and ENTER buttons again.
2. For Multi Digit Toll Control, see Section MITL9105/9110-097-212-NA Programming Procedures.

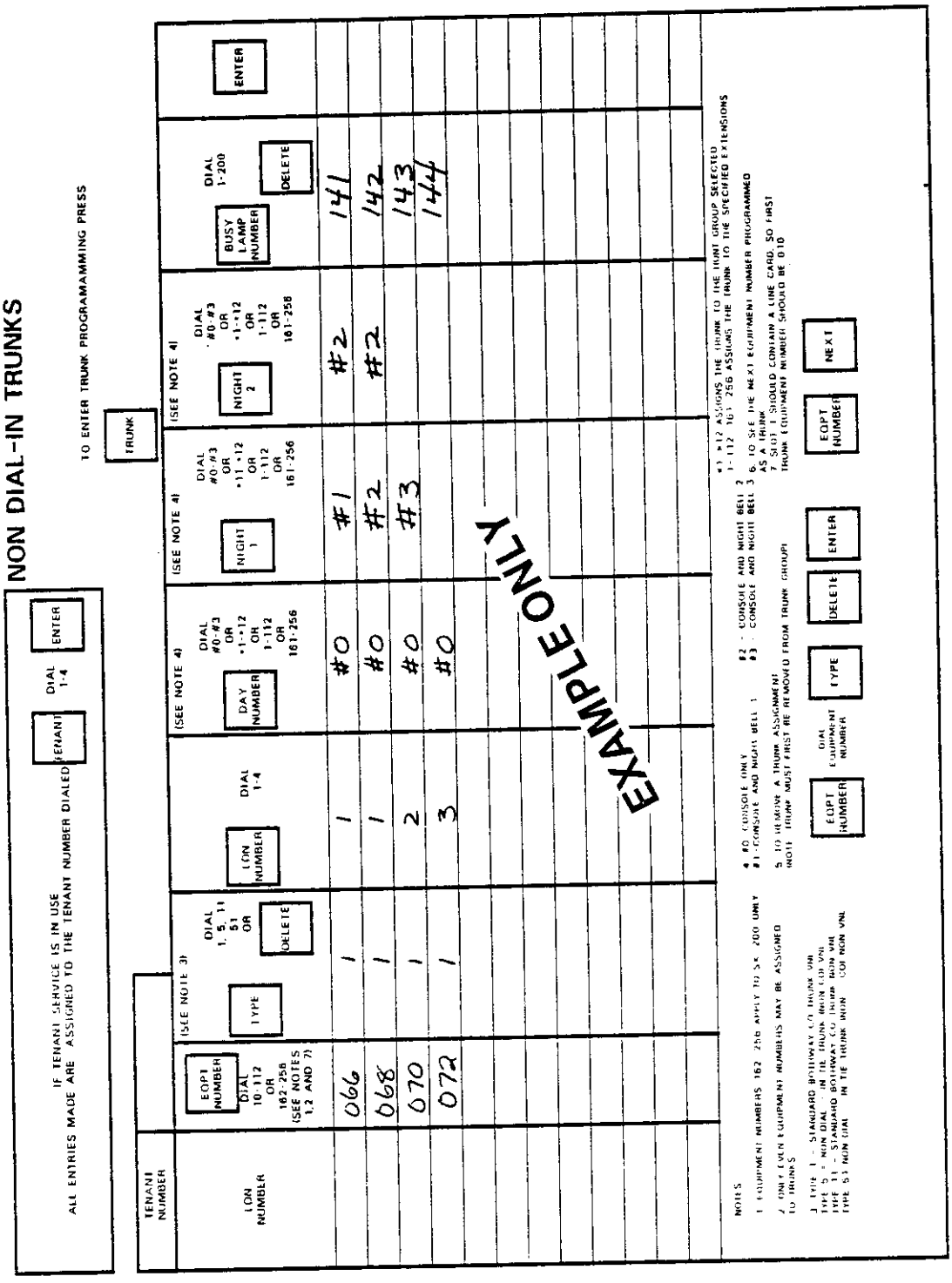
NON DIAL-IN TRUNKS
IF TENANT SERVICE IS IN USE
ALL ENTRIES MADE ARE ASSIGNED TO THE TENANT NUMBER DIALED
TENANT
DIAL 1-4
ENTER
TO ENTER TRUNK PROGRAMMING PRESS
TRUNK
TENANT NUMBER
LCN NUMBER
EQPT NUMBER DIAL 10-112 OR 162-258 (SEE NOTES 1,2 AND 7)
(SEE NOTE 3)
TYPE
DIAL 1, 5, 11 51 OR DELETE
LCN NUMBER
DIAL 1-4
(SEE NOTE 4)
DAY NUMBER
DIAL #0-#3 OR *1-*12 OR 1-112 OR 161-256
(SEE NOTE 4)
NIGHT 1
DIAL #0-#3 OR *1-*12 OR 1-112 OR 161-256
(SEE NOTE 4)
NIGHT 2
DIAL #0-#3 OR *1-*12 OR 1-112 OR 161-256
BUSY LAMP NUMBER
DIAL 1-200
DELETE
ENTER
066 1 1 #0 #1 #2 141
068 1 1 #0 #2 #2 142
070 1 2 #0 #3 143
072 1 3 #0 144
EXAMPLE ONLY
NOTES
1 EQUIPMENT NUMBERS 162-256 APPLY TO SX-200 UNIT
2 ONLY EVEN EQUIPMENT NUMBERS MAY BE ASSIGNED TO TRUNKS
3 TYPE 1 - STANDARD BOTHWAY CO TRUNK VNI
TYPE 5 - NON DIAL - IN TIE TRUNK MAIN LCR VNI
TYPE 11 - STANDARD BOTHWAY CO TRUNK NON VNI
TYPE 51 NON DIAL - IN TIE TRUNK NON - LCR NON VNI
4 #0 CONSOLE ONLY
#1 - CONSOLE AND NIGHT BELL 1
#2 - CONSOLE AND NIGHT BELL 2
#3 - CONSOLE AND NIGHT BELL 3
5 TO REMOVE A TRUNK ASSIGNMENT
NOTE TRUNK MUST FIRST BE REMOVED FROM TRUNK GROUP
EQPT NUMBER
DIAL EQUIPMENT NUMBER
TYPE
DELETE
ENTER
6 TO SEE THE NEXT EQUIPMENT NUMBER PROGRAMMED AS A TRUNK
7 SLOT 1 SHOULD CONTAIN A LINE CARD, SO FIRST TRUNK EQUIPMENT NUMBER SHOULD BE 010
EQPT NUMBER
NEXT
#1-#12 ASSIGNS THE TRUNK TO THE HUNT GROUP SELECTED
1-112, 161-256 ASSIGNS THE TRUNK TO THE SPECIFIED EXTENSIONS

(c) Dial-In Trunks

Step	Operation
	If TENANT service is used, commence at step 1. If TENANT service is not used, start at step 4 (Note 1).
1.	Press the TENANT button.
2.	Dial the required tenant number (1, 2, 3 or 4).
3.	Press the ENTER button.
4.	Press the TRUNK button.
5.	Press the EQPT NUMBER button.
6.	Dial the equipment number to be associated with the required trunk (see EQUIPMENT NUMBERING, Fig. 2-2).
7.	Press the TYPE button.
8.	Dial the required trunk type number (2 - Direct Inward System Access or 4 - Dial-In Tie Trunk).
	OR
	Press the DELETE button to delete all trunk information.
9.	Press the COS number button.
10.	Dial the required COS number (1 through 16).
11.	Press the TOLL DENY button.
12.	Press the ADD button to implement toll denial for the trunk selected.
	OR
	Press the DELETE button to remove toll denial for the trunk selected.
13.	Press the BUSY LAMP NUMBER button.
14.	Dial the number of the busy lamp which is to be associated with the selected lamp. (see BUSY LAMP POSITION NUMBERING, Fig. 2-2)
	OR
	Press the DELETE key if no busy lamp is required.
15.	Press the ENTER button to enter all Dial-In Trunk information into the memory.
16.	Repeat steps 1 through 16 for all Dial-In trunks required.

Notes:
1. All extensions in one tenant group should be entered in succession following the listed steps. The next group of extensions are entered using the TENANT and ENTER buttons again.
2. For Multi Digit Toll Control, see Section MITL9105/9110-097-212-NA Programming Procedures.

DIAL-IN TRUNKS

IF TENANT SERVICE IS IN USE
ALL ENTRIES MADE ARE ASSIGNED TO THE TENANT NUMBER DIALED

TENANT | DIAL 1-4 | ENTER

TO ENTER TRUNK PROGRAMING PRESS TRUNK

TENANT NUMBER						
LDN NUMBER	EQPT NUMBER DIAL 10 112 OR 162 256 (SEE NOTES 1,2 AND 7)	SEE NOTE 3 TYPE DIAL 2,4,21 OR 41 OR DELETE	COS NUMBER DIAL 1 16	TOLL DENY ADD TOLL DENY OR DIAL COR CODE 1,2, OR 3 OR NOTE 6 TOLL ALLOW DELETE	BUSY LAMP NUMBER DIAL 1 200 CONSOLES DELETE	ENTER
	074	2	2	DELETE	74	
	078	2	2	DELETE	75	
	082	2	2	DELETE	76	
	086	21	3	DELETE	77	

EXAMPLE ONLY

NOTES

1. EQUIPMENT NUMBERS 162 256 APPLIES TO SX-200 ONLY
2. EVEN EQUIPMENT NUMBERS ONLY MAY BE ASSIGNED TO TRUNKS

TYPE 2 - DIRECT INWARD SYSTEM ACCESS VNL
TYPE 4 - DIAL IN TIE TRUNK (NON COI) VNL
TYPE 21 - DIRECT INWARD SYSTEM ACCESS NON VNL
TYPE 41 - DIAL IN TIE TRUNK (NON COI NON VNL

6. COR 1-3 APPLIES ONLY IF MULTI DIGIT TOLL CONTROL IS USED
7. SLOT 1 SHOULD CONTAIN A LINE CARD SO FIRST TRUNK EQUIPMENT NUMBER SHOULD BE 010

4. TO REMOVE A TRUNK ASSIGNMENT NOTE TRUNK MUST FIRST BE REMOVED FROM TRUNK GROUP

EQPT NUMBER | DIAL EQUIPMENT NUMBERS | TYPE | DELETE

5. TO SEE THE NEXT EQUIPMENT NUMBER ASSIGNED AS A TRUNK

EQPT NUMBER | NEXT

MITEL

(d) DID/CCSA Dial-In Trunks

Step	Operation
	If TENANT service is used, commence at step 1. If TENANT service is not used, start at step 4 (Note 1).
1.	Press the TENANT button.
2.	Dial the required tenant number (1, 2, 3 or 4).
3.	Press the ENTER button.
4.	Press the TRUNK button.
5.	Press the EQPT NUMBER button.
6.	Dial the equipment number to be associated with the required trunk (see EQUIPMENT NUMBERING, Fig. 2-1).
7.	Press the TYPE button.
8.	Dial the required trunk type code (3 - DID VNL, 6 - CCSA VNL, 31 - DID Non VNL and 61 - CCSA Non VNL) OR Press the DELETE button to delete all trunk information.
9.	Press the I/C button.
10.	Dial the required NMX code (N - number of digits to be received after the trunk is seized, M - number of digits to be absorbed after the trunk is seized, X - the actual leading digit to be inserted, if required).
11.	Press the BUSY LAMP NUMBER button.
12.	Dial the number of the busy lamp which is to be associated with the selected trunk (see BUSY LAMP POSITION NUMBERING, Fig. 2-2) OR Press the DELETE button, if no busy lamp is required.
13.	Press the ENTER button to enter all DID/CCSA Dial-In Tie Trunk information into the memory.
14.	Repeat steps 1 through 13 for all DID/CCSA trunks required.

Notes:
1. All trunks in one tenant group should be entered in succession following the listed steps. The next group of trunks are entered in a similar manner using the TENANT and ENTER buttons again.
2. For Multi Digit Toll Control, see Section MITL9105/9110-097-212-NA, Programming Procedures.

DID/CCSA TRUNKS

IF TENANT SERVICE IS IN USE
ALL ENTRIES MADE ARE ASSIGNED TO THE TENANT NUMBER DIALED — TENANT — DIAL 1-4 — ENTER

TO ENTER TRUNK PROGRAMMING PRESS — TRUNK

TENANT NUMBER									
LDN NUMBER	EQPT NUMBER — DIAL 10-110 OR 162-254 (SEE NOTES 1,2 AND 7)	SEE NOTES 3 — TYPE	DIAL 3,6 31 OR 61 — DELETE	I/C	DIAL NMX CODE (NOTE 4) N	M	X	BUSY LAMP NUMBER — DELETE — DIAL 1-200	ENTER
	090	3		3	2			78	
	094	3		3	2			79	

EXAMPLE ONLY

NOTES

1. EQUIPMENT NUMBERS 162-254 APPLY TO SX-200 ONLY.
2. ALTERNATE EVEN NUMBERS ONLY MAY BE ASSIGNED TO ODD/CCSA TRUNKS.
3. TYPE 1 — DID VNL
   TYPE 31 — DID NON VNL
   TYPE 6 — CCSA VNL
   TYPE 61 — CCSA NON VNL
4. N — NUMBER OF DIGITS TO BE RECEIVED AFTER TRUNK IS SEIZED (1-9)
   M — NUMBER OF DIGITS TO BE ABSORBED AFTER TRUNK IS SEIZED (0-8)
   X — LEADING DIGIT TO BE INSERTED IF REQUIRED
   MAXIMUM NUMBER OF DIGITS IS 4 (3 IF TENANT SERVICE) AFTER ABSORPTION (M) AND ADDING A DIGIT (X).
5. TO REMOVE A TRUNK ASSIGNMENT (TRUNK MUST FIRST BE REMOVED FROM TRUNK GROUP) — EQPT NUMBER — TYPE — DELETE
6. TO SEE THE NEXT EQPT NUMBER ASSIGNED AS A TRUNK — EQPT NUMBER — NEXT
7. SLOT 1 SHOULD CONTAIN A LINE CARD; SO FIRST TRUNK EQUIPMENT NUMBER SHOULD BE 010.

4.08 Trunk Groups

Step	Operation
	If TENANT service is used, commence at step 1. If TENANT service is not used, start at step 4 (Note 1).
1.	Press the TENANT button.
2.	Dial the required tenant number (1, 2, 3 or 4).
3.	Press the ENTER button.
4.	Press the TRUNK GROUP button.
5.	Dial the required trunk group number (1 through 12).
6.	Press the ACCESS CODE button.
7.	Dial the required trunk group access code OR Press the DELETE button to remove all trunk group information.
8.	Press the TYPE button.
9.	Dial the four-digit trunk group type (see TRUNK GROUP TYPE CODES, Table 2-4).
10.	Press the TOLL DENY button.
11.	Press the ADD button to provide toll denial on the trunk group. OR Press the DELETE button if toll denial is not required on the trunk group.
12.	Press the OVFLO GROUP button.
13.	Dial the number of the trunk group (1 through 12) to which calls will overflow if the trunk group is busy. You must not overflow into the same group. (see Note 1) OR Press the DELETE button if no overflow is required.
14.	Press the EQPT NUMBER button.
15.	Dial the equipment number of the first trunk in the trunk group.
16.	Press the EQPT NUMBER button.
17.	Dial the equipment number of the next trunk in the trunk group.
18.	Repeat steps 16 and 17 until all required equipment numbers have been dialed.
19.	Press the ENTER button to enter all trunk group information into the memory.
20.	Repeat steps 1 through 19 for all required trunk groups.

Note 1: If a call to a trunk group is routed to the overflow group, the restrictions of the overflow group are in effect for that call.

TRUNK GROUPS

IF TENANT SERVICE IS IN USE
ALL ENTRIES MADE ARE ASSIGNED TO THE TENANT NUMBER DIALED

TENANT | DIAL 1-4 | ENTER

TO ENTER TRUNK GROUP PROGRAMMING PRESS

TRUNK GROUP (TRUNK INFORMATION MUST BE ENTERED BEFORE TRUNK GROUP DATA)

TENANT NUMBER

TRUNK GROUP DIAL 1-12	ACCESS CODE / DIAL CODE OR DELETE	TYPE (SEE NOTE 6): 1ST DIGIT	2ND DIGIT	3RD DIGIT	4TH DIGIT	TOLL DENY (NOTE 8)	ADD OR DELETE	OVFLO GROUP (NOTE 5)	DIAL 1-12 OR DELETE	SEE NOTE 4 AND 7: PRESS EQPT NUMBER BEFORE DIALING EACH EQUIPMENT NUMBER ENTRY; AFTER LAST ENTRY PRESS ENTER

EXAMPLE ONLY

NOTES

1. TO SEE THE TRUNKS IN A TRUNK GROUP: TRUNK GROUP | DIAL NUMBER (1-12) | EQPT NUMBER | NEXT | NEXT
2. TO SEE ALL TRUNK GROUPS: TRUNK GROUP | NEXT | NEXT
3. TO DELETE TRUNK GROUP: TRUNK GROUP | DIAL NUMBER (1-12) | ACCESS CODE | DELETE | ENTER
4. TO MAKE A CHANGE TO A TRUNK GROUP THE LIST OF MEMBERS MUST BE RE ENTERED. INDIVIDUAL MEMBERS CANNOT BE DELETED OR CHANGED. THE EXISTING TRUNK GROUP LIST IS AUTOMATICALLY DELETED WHEN YOU START TO ENTER A NEW ONE
5. ORIGINAL AND OVERFLOW TRUNK GROUPS MUST BE THE SAME TYPE AND HAVE THE SAME TOLL RESTRICTION CHARACTERISTICS
6. TRUNK GROUP TYPE IS 4 DIGITS

   1ST DIGIT: 1 NO SUPERVISION
   2 ANSWER SUPERVISION
   3 TOLL REVERSAL
   4 OUTGOING AUDIO INHIBITED UNTIL ANSWER SUPERVISION TIMEOUT OR #DIALED

   2ND DIGIT
   1 NO MESSAGE REGISTER
   2 MESSAGE REGISTER
   3 SMDR WITHOUT MESSAGE REGISTER
   4 SMDR WITH MESSAGE REGISTER

   3RD DIGIT
   1 ROTARY DIAL OFFICE, NO WAIT FOR DIAL TONE
   2 ROTARY DIAL OFFICE, WAIT FOR DIAL TONE
   3 TOUCH TONE DIAL OFFICE, NO WAIT FOR DIAL TONE
   4 TOUCH TONE DIAL OFFICE, WAIT FOR DIAL TONE

   4TH DIGIT
   1 CENTRAL OFFICE
   2 NON-CO
   3 IDENTIFIED TRUNK GROUP (NON CO)
7. THE TRUNKS WITHIN A TRUNK GROUP MAY BE PROGRAMMED FOR EITHER TERMINAL OR CIRCULAR HUNTING. IF TERMINAL HUNTING IS REQUIRED ENTER TRUNK EQUIPMENT NUMBERS IN REQUIRED SEQUENCE

   IF CIRCULAR HUNTING IS REQUIRED MAKE LAST TRUNK EQUIPMENT NUMBER THE SAME AS THE FIRST TRUNK EQUIPMENT NUMBER
8. USE OF TOLL DENY KEY DOES NOT APPLY IF TOLL CONTROL ISUSED

SEE SECTION MITL9105-9110-097-212-NA OR TOLL CONTROL FORMS THIS SECTION

MITEL

APPENDIX 1
MITEL ACTION PROCEDURES

GENERAL

A1.01 Task oriented functions in this section are implemented using MITEL ACTION PROCEDURES (MAP's).

A1.02 A MAP is a step-by-step procedure using a flow chart principle, written and illustrated where necessary to a level of detail that allows both experienced and inexperienced personnel to carry out the tasks detailed A MAP contains two levels of information as follows:

(a) For experienced personnel, a series of steps (level one) each numbered (n) and annotated with minimal information.

(b) For inexperienced personnel, each step referred to in (a) above is amplified by a connected series of numbered substeps (nA) (level two).

A1.03 A typical example of a MAP is shown in Fig. A1, with the two levels detailed.

MAP SYMBOLS

A1.04 There are four basic symbol shapes which may be used in a MAP, and are defined as follows.

A1.05 **AND Block:** Used to indicate a level one step that must be performed. Consists of a square with the word AND centred in the block.

A1.06 **OR Block:** Used to indicate a choice of level one steps, one of which must be performed. Consists of a rectangle, with the text centred in the block, and the word OR appearing between the alternative operations.

A1.07 The rectangle is also used to border instructions which imply that the operator must perform a task outside the scope of the MAP. The text is centred in the rectangle.

A1.08 **DECISION Block:** Used to indicate a decision within the level one steps which must be made. The symbol is based on a hexagon with the top and bottom sides extended. Decision text is centred in the symbol.

A1.09 **START/FINISH/JUMP TO Block:** Used to indicate the start and finish of a MAP. Also used to indicate "jump to" points within the MAP, for example "go to (n)" or "from (n)" or "return to (n)". The symbol is a rectangle with semi circular ends. Text is centred in the symbol.

THE OPERATOR'S USE OF MAP'S

Experienced Operator

A1.10 For the experienced operator to complete a task using a MAP, reference to the sequential short form level one step is usually all that is necessary. Using Fig. A1 as an example, the experienced operator would proceed as follows.

A1.11 At (1) the operator makes a decision based on the information within the block. If the answer is YES, the operator must proceed to a different MAP. If the answer is NO, the operator is faced with another decision at block (2).

A1.12 At (2) If the decision is NO, there is no requirement to proceed further and the test is abandoned. This naturally results in a FINISH block. If the decision is YES, the operator proceeds to (3) and (4) in succession, i.e. dials the DID station number and completes the call to the check extension.

A1.13 The description of the instructions, carried out in A1.05 and A1.06 have assumed the level of competence of the operator, is such that short form level one steps contain sufficient information, and therefore, the operator reads only the centre column of the MAP, top to bottom of the page.

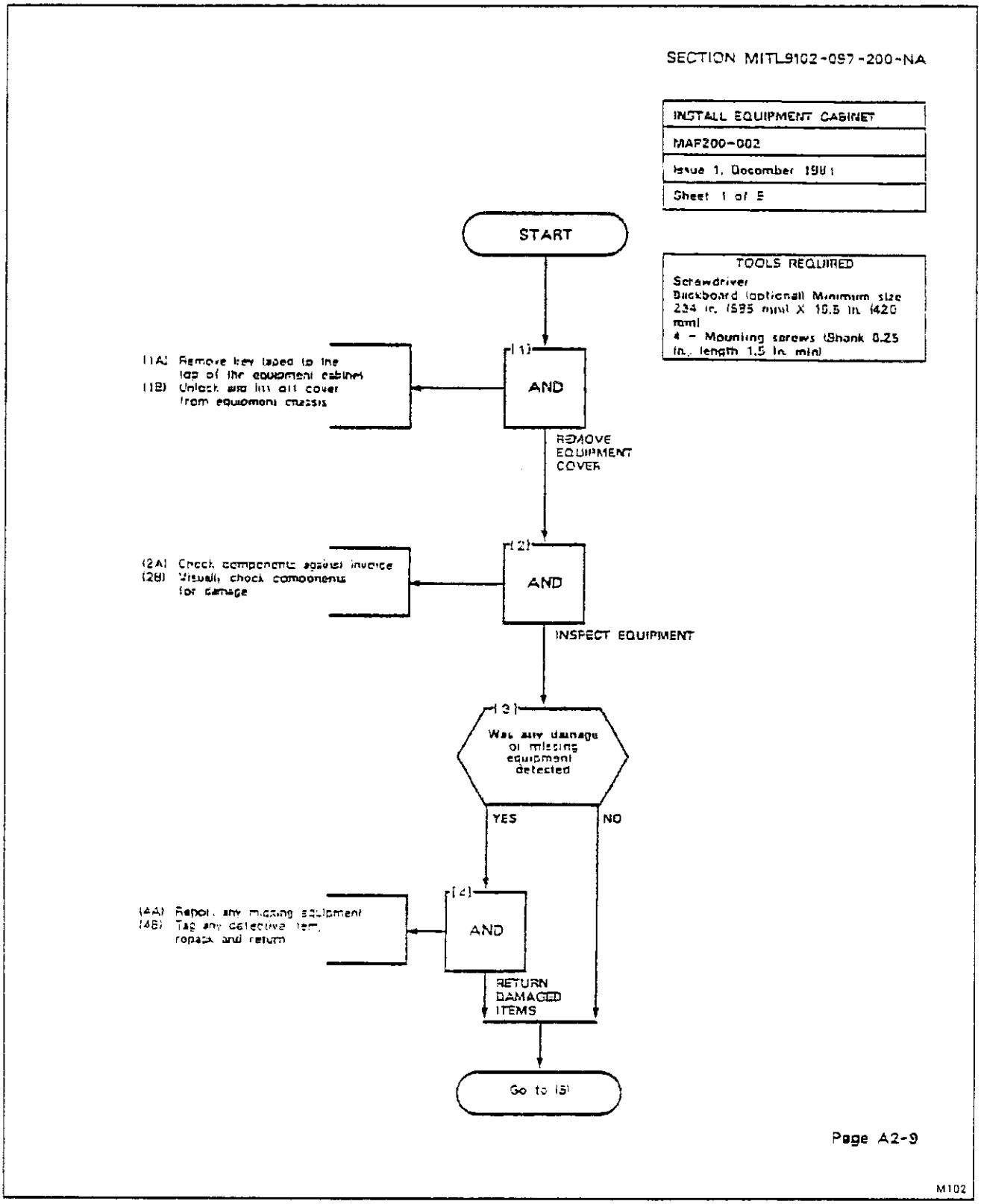

Fig. A1 Typical MAP Page

A1.14 Using Fig. A1 as an example, the path followed should be:

(a) At (1) and (2), make the decisions called for at these steps as before.

(b) At step (3), dial the DID station number by performing substeps (3A), (3B) and (3C).

TOOLS, TEST EQUIPMENT AND SPECIAL INSTRUCTIONS

A1.15 Any tools, test equipment or special instructions that the operator requires or needs to know are stated on the first page of each MAP. If the MAP is long, and contains a number of sub procedures, these are listed in synopsis form on the first page.

APPENDIX 2
SYSTEM PROGRAMMING PROCEDURES

GENERAL

A2.01 This appendix details the preferred order in which the SX-100 or SX-200 PABX should be programmed for features and options required by the customer. This appendix also includes procedures for programming Multi Digit Toll Control, Speed Call and Automatic Route Selection.

A2.02 Table A2-1 details the order of the standard system programming procedures. Table A2-2 details the order of the Multi Digit Toll Control programming procedures. Table A2-3 details the order of Speed Call programming of the system. Table A2-4 details the order of Route Selection programming of the system.

TABLE A2-1
STANDARD

Step	Title	MAP
1	System Programming	210-201
2	Select Programming Options	210-202
3	Program System Options	210-203
4	Program COS Options	210-204
5	Assign Feature Access Codes	210-205
6	Program New Extensions	210-206
7	Program Extension Hunt Group	210-207
8	Program New Non Dial-In Trunks	210-208
9	Program New Dial-In Trunks	210-209
10	Program New DID Trunks	210-210
11	Program Trunk Groups	210-211
12	Terminate Programming Mode	210-212
13	Range Programming for Extensions	210-213

TABLE A2-2
MULTI DIGIT TOLL CONTROL

Order	Option	MAP No.
1	Selection of Extended Programming	210-221
2	Absorb Plan	210-222
3	Control Plan	210-223
4	Trunk Group Class of Restriction	210-224
5	Restriction Tables	210-225
6	Add an Entry	210-226
7	Displaying Sequential Entries	210-227
8	Search for an Entry	210-228
9	Delete an Entry	210-229
10	Terminating Programming	210-274

TABLE A2-3
SPEED CALL

Order	Option	MAP No.
1	Selection of Extended Programming	210-221
2	Programming Personal Tables	210-242
3	Convert Tables from Personal to Common Use	210-243
4	Terminating Programming	210-274

TABLE A2-4
AUTOMATIC ROUTE SELECTION

Order	Option	MAP No.
1	Code Table Quantity Selection or Change	210-250
2	Area Code Table Programming	210-251
3	Review Area Code Table Programming	210-252
4	Delete an Area Code Table	210-253
5	Area Code/Office Code Programming	210-254
6	Review/Delete Part of All Area Code/Office Code	210-255
7	Program Modify Digits	210-256
8	To Review or Delete Modify Digit Table	210-257
9	Route Table Programming	210-258
10	To Review or Delete a Route Table	210-259
11	Review or Delete Routes	210-260
12	Terminate Programming	210-274

SYSTEM PROGRAMMING
MAP210-201
Issue 2, February 1982
Sheet 1 of 2

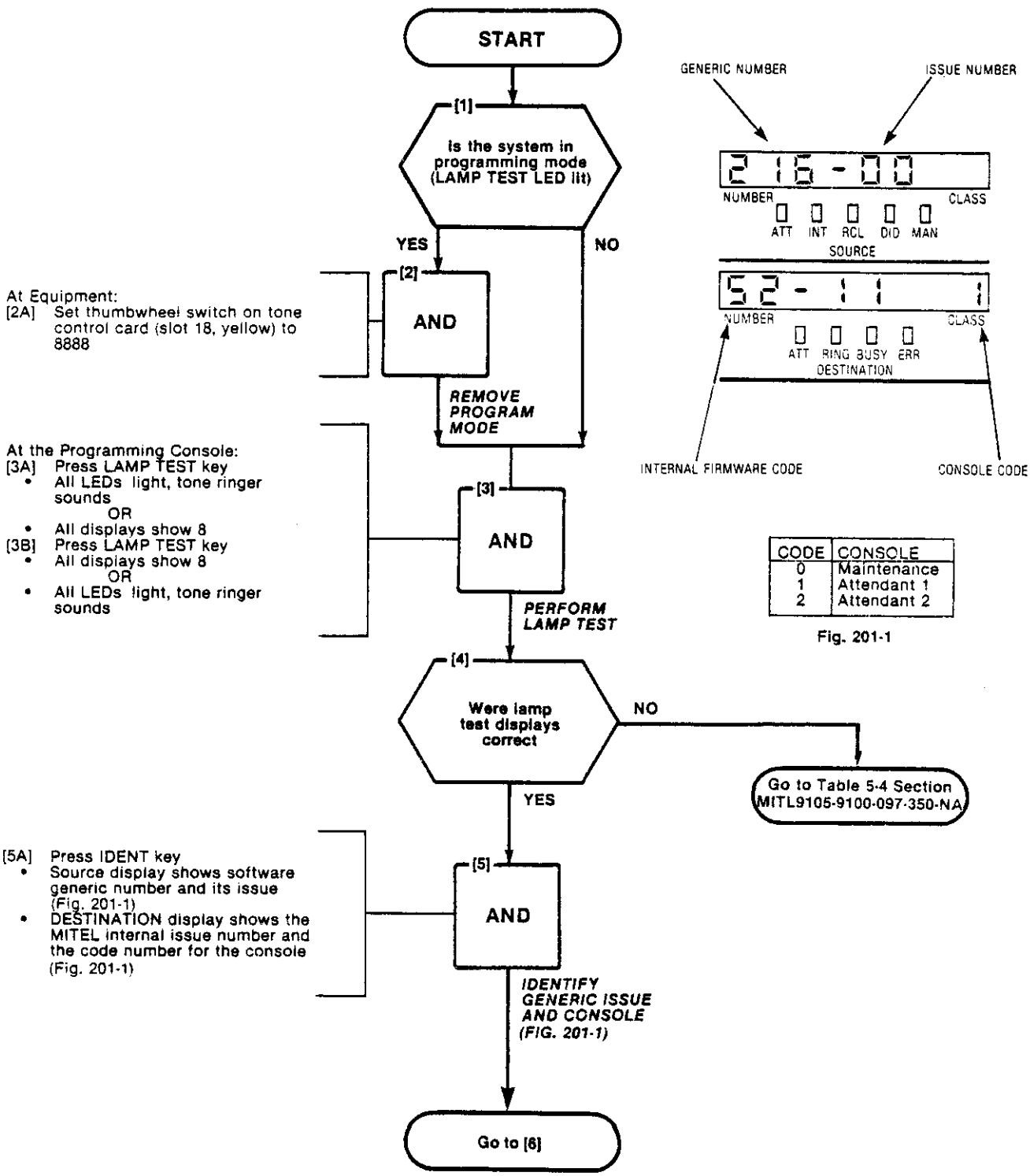

CODE	CONSOLE
0	Maintenance
1	Attendant 1
2	Attendant 2

Fig. 201-1

SYSTEM PROGRAMMING
MAP210-201
Issue 2, February 1982
Sheet 2 of 2

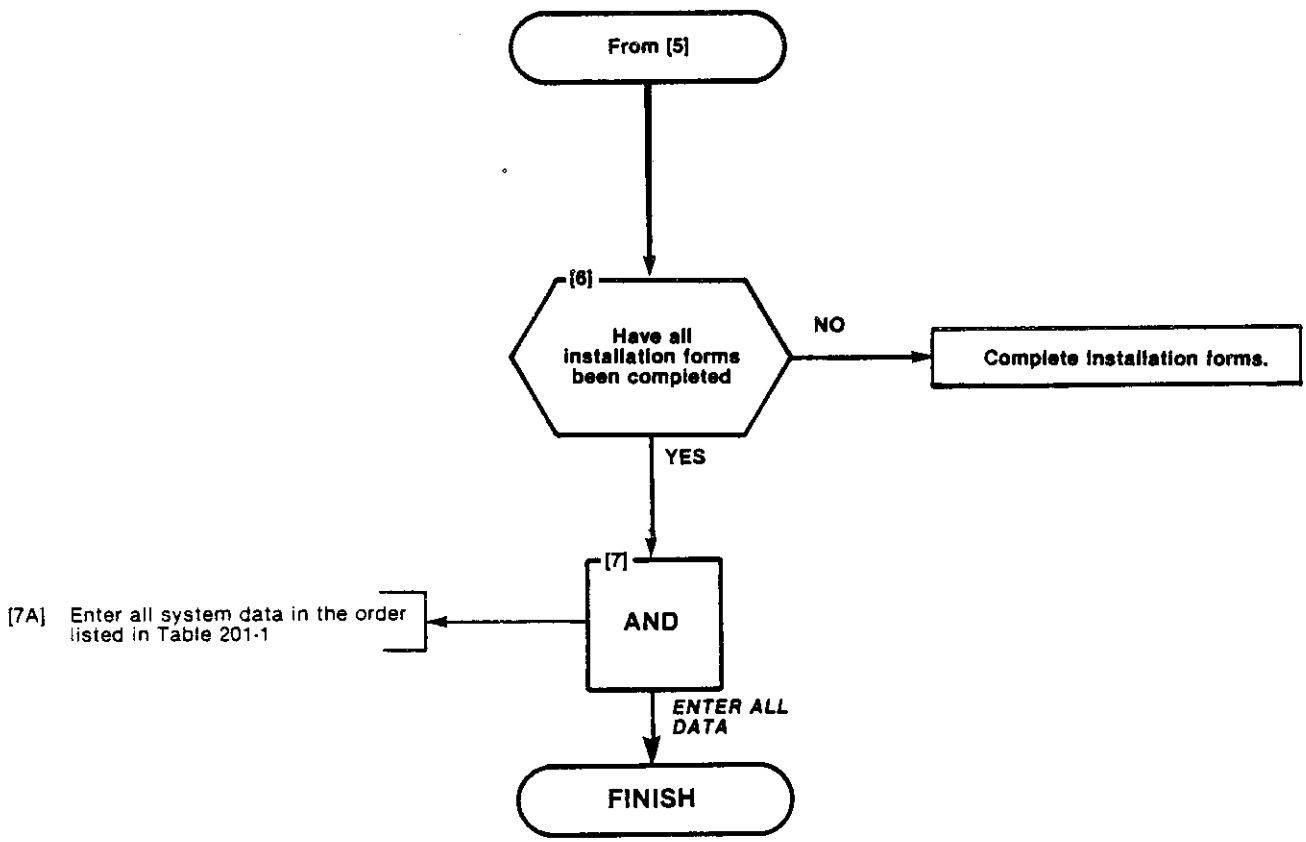

TABLE 201-1
STANDARD PROGRAMMING

Step	Title	MAP
1	Select Programming Mode	210-202
2	Program System Options	210-203
3	Program COS Options	210-204
4	Assign Feature Access Codes	210-205
5	Program New Extensions	210-206
6	Program Extension Hunt Group	210-207
7	Program New Non Dial-In Trunks	210-208
8	Program New Dial-In Trunks	210-209
9	Program New DID Trunks	210-210
10	Program Trunk Groups	210-211
11	Terminate Programming Mode	210-212
12	Range Programming	210-213

SELECT PROGRAMMING MODE
MAP210-202
Issue 2. February 1982
Sheet 1 of 6

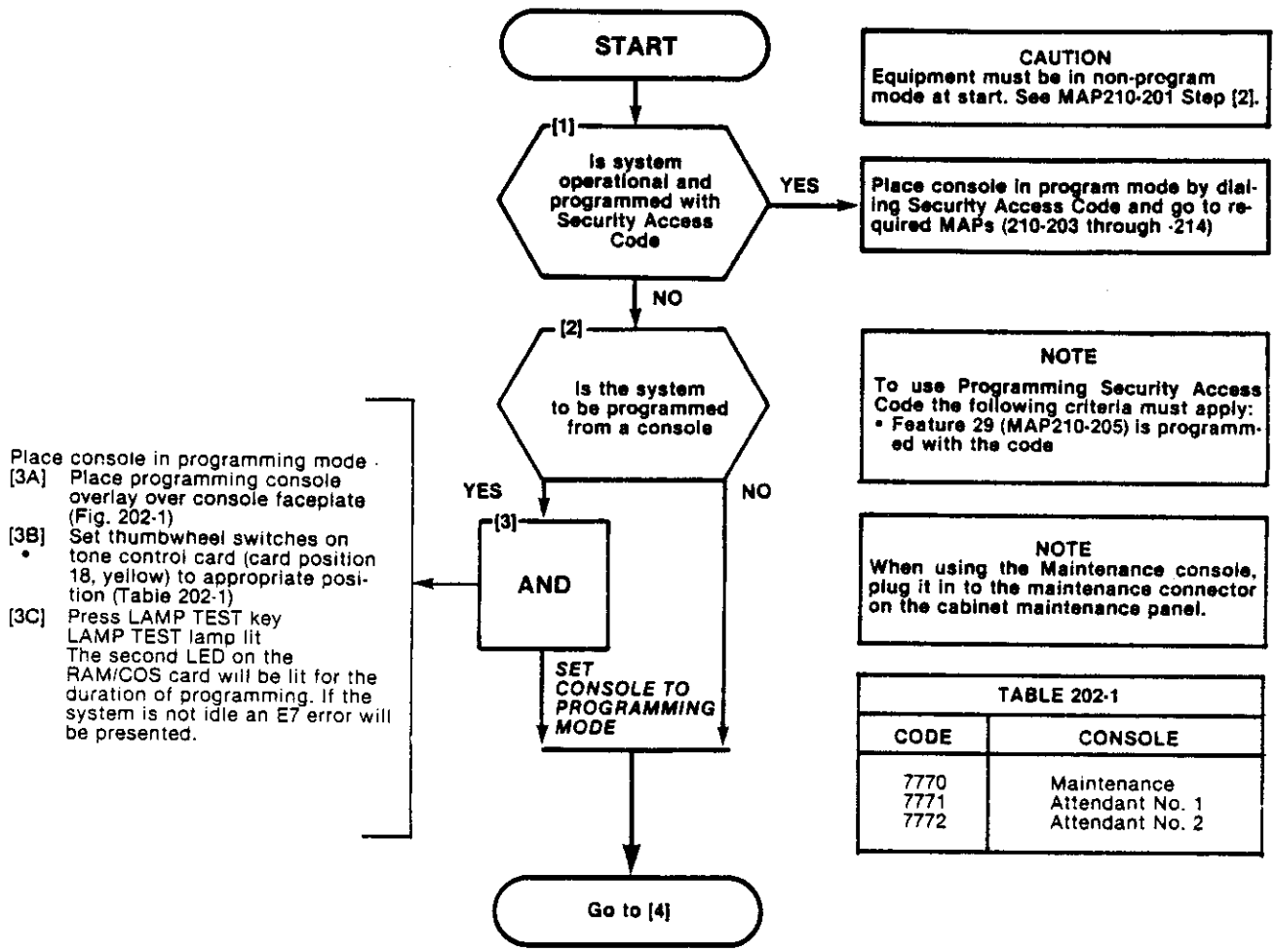

CAUTION
Equipment must be in non-program mode at start. See MAP210-201 Step [2].

Place console in program mode by dialing Security Access Code and go to required MAPs (210-203 through -214)

NOTE
To use Programming Security Access Code the following criteria must apply:
- **Feature 29 (MAP210-205) is programmed with the code**

NOTE
When using the Maintenance console, plug it in to the maintenance connector on the cabinet maintenance panel.

TABLE 202-1

CODE	CONSOLE
7770	Maintenance
7771	Attendant No. 1
7772	Attendant No. 2

SELECT PROGRAMMING MODE
MAP210-202
Issue 2. February 1982
Sheet 2 of 6

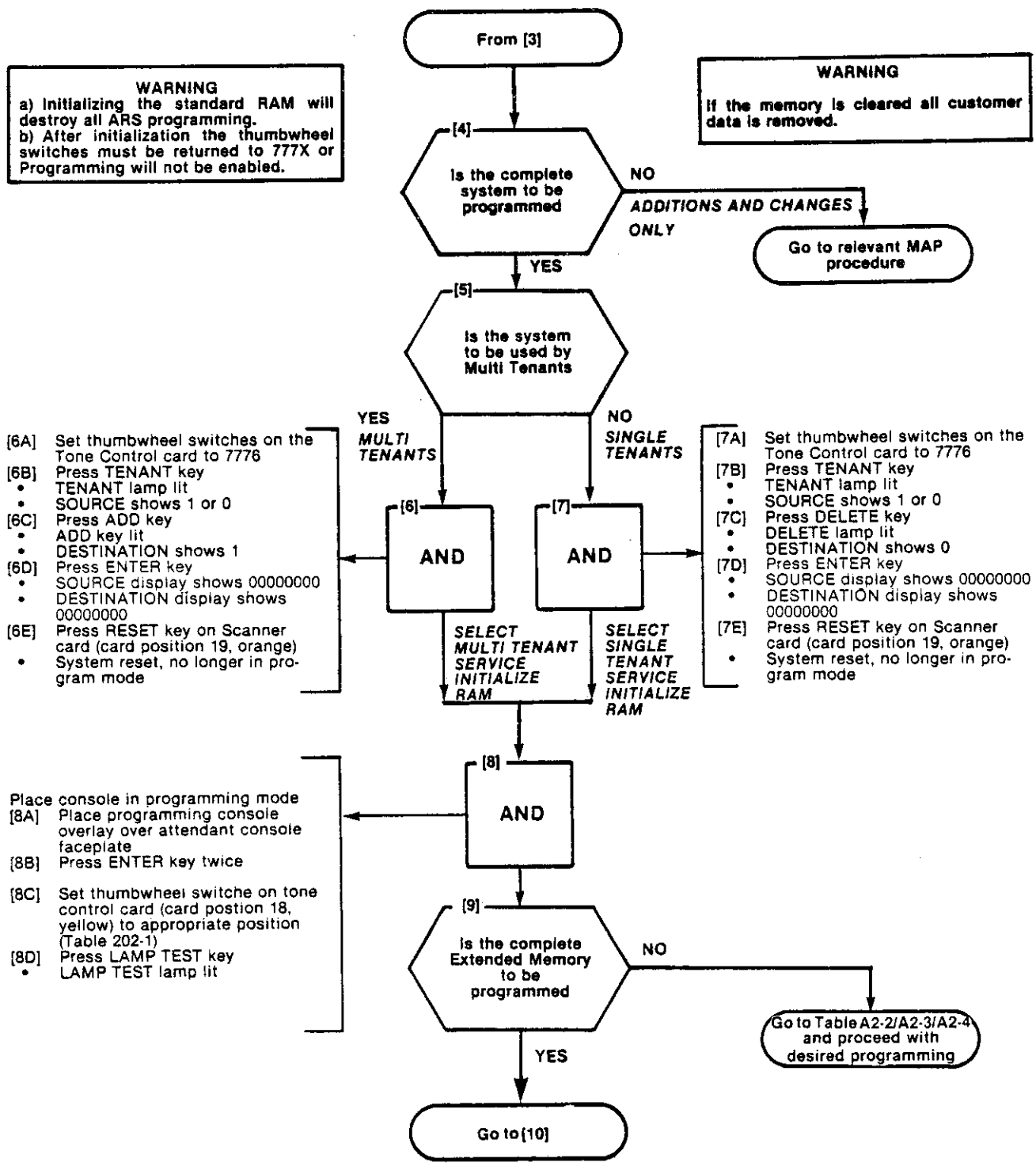

SELECT PROGRAMMING MODE
MAP210-202
Issue 2. February 1982
Sheet 3 of 6

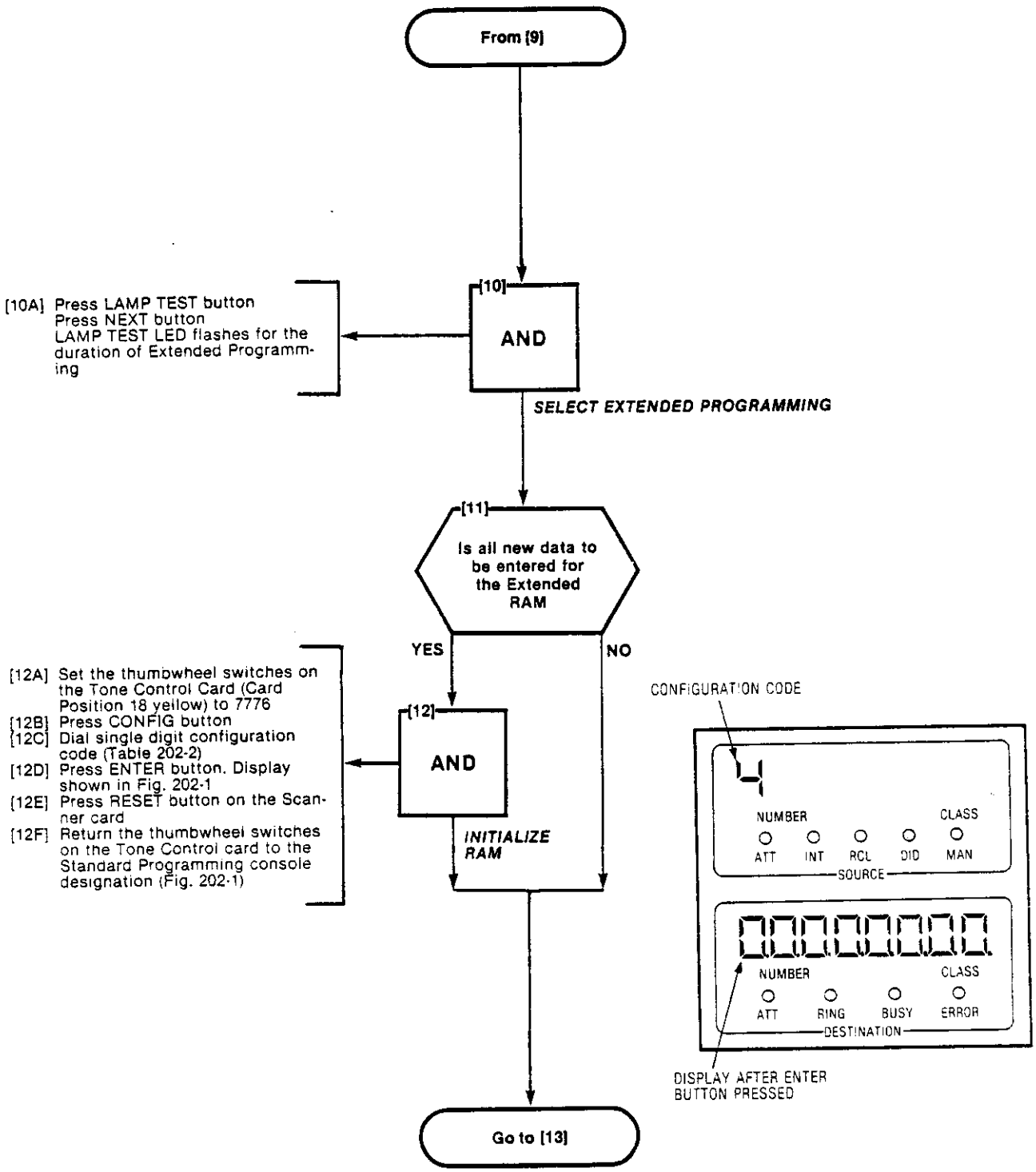

SELECT PROGRAMMING MODE
MAP210-202
Issue 2, February 1982
Sheet 4 of 6

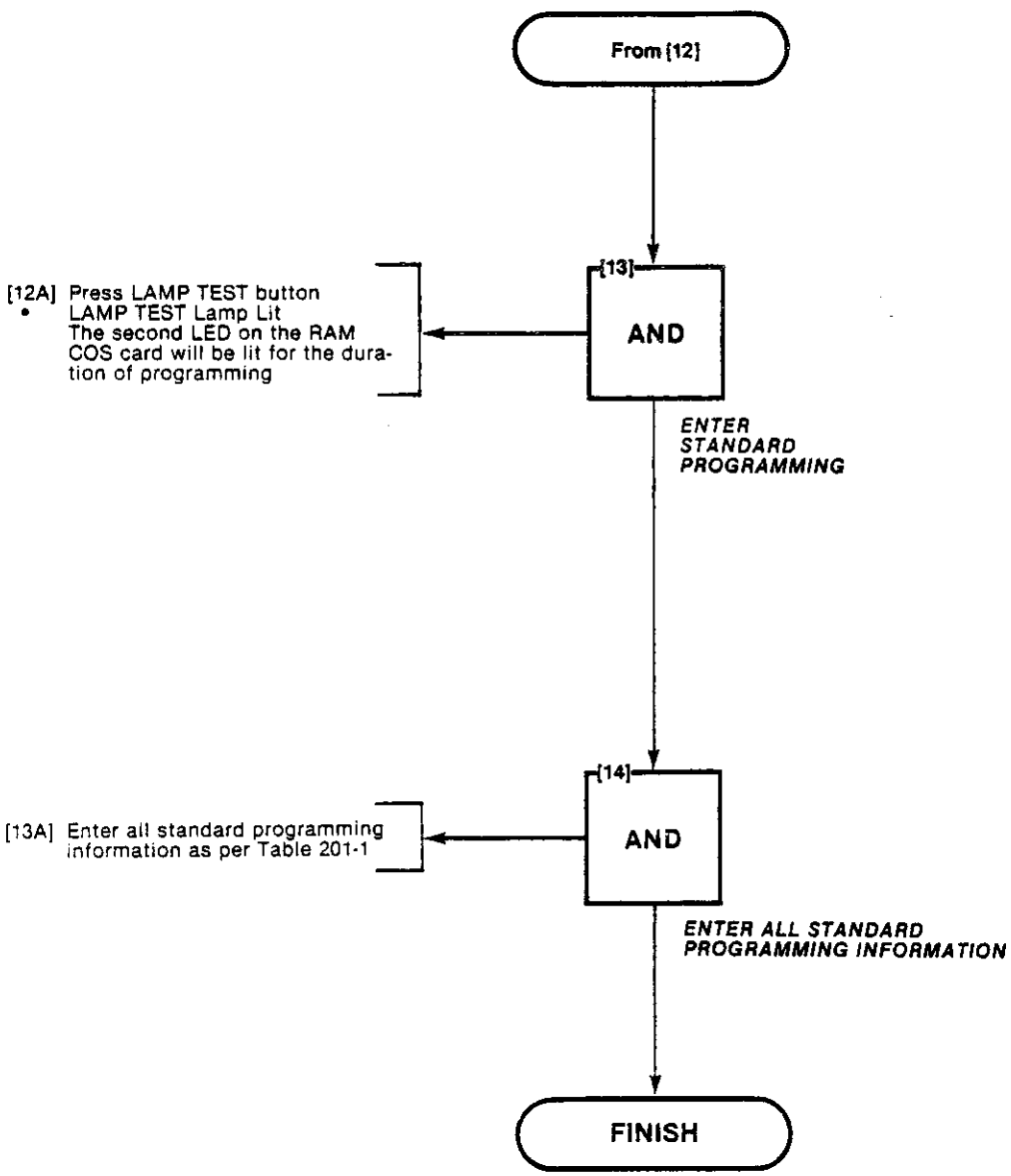

TABLE 201-2
CONFIGURATIONS

CONFIGURATION	WAKE-UP	MULTI DIGIT TOLL CONTROL	SPEED CALL	AUTOMATIC ROUTE SELECTION
1	WU 1	TC 2	—	ARS 1
2	—	TC 2	SC 1	ARS 1
3	—	TC 1	SC 2	ARS 1
4	—	TC 3	—	ARS 1
5	WU 1	TC 1	—	ARS 2
6	—	—	SC 1	ARS 3
7	WU 1	TC 1	SC 1	ARS 1
	WU Automatic Wake-Up	TC 1 Basic TC 2 Standard TC 3 Extended	SC 1 Standard SC 2 Extended	ARS 1 Basic ARS 2 Standard ARS 3 Extended

SELECT PROGRAMMING MODE
MAP210-202
Issue 2, February 1982
Sheet 6 of 6

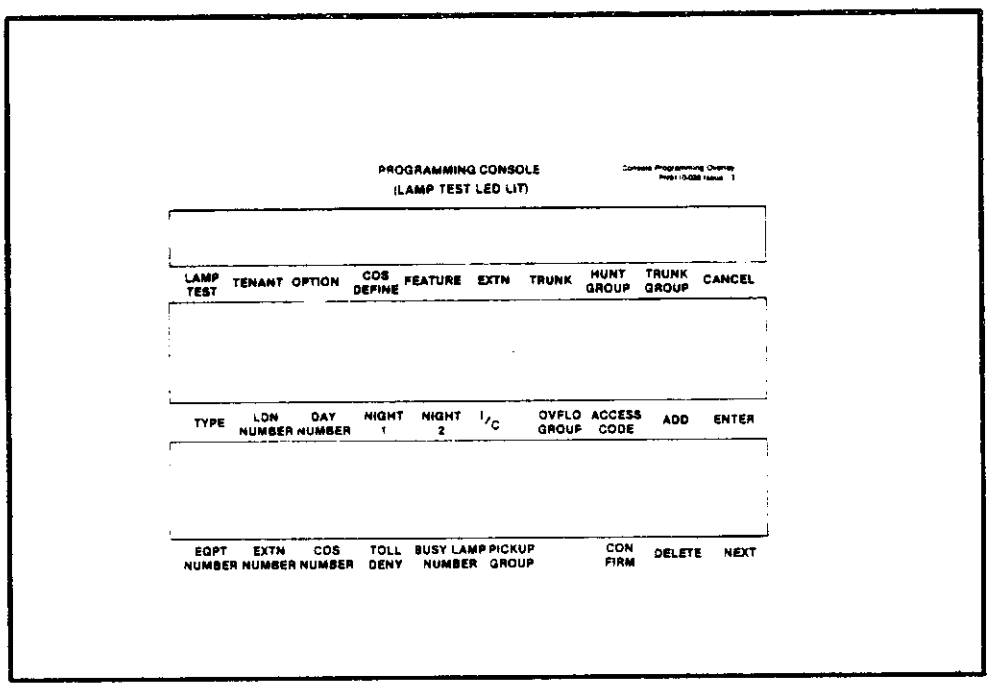

Fig. 202-1 Programming Console Overlay

PROGRAM SYSTEM OPTIONS
MAP210-203
Issue 2. February 1982
Sheet 1 of 5

NOTES
(1) All entries are made from the console dial pad.
(2) OPTION lamp lit throughout procedure.
(3) A display of E0 indicates that an incorrect key had been pressed. Press the key specified.
(4) Consult Table 2-2 for System Option Conflicts.

SYNOPSIS
Select option mode.
Enter required system codes, (100-270)
Press ADD or DELETE keys.
Press ENTER key.

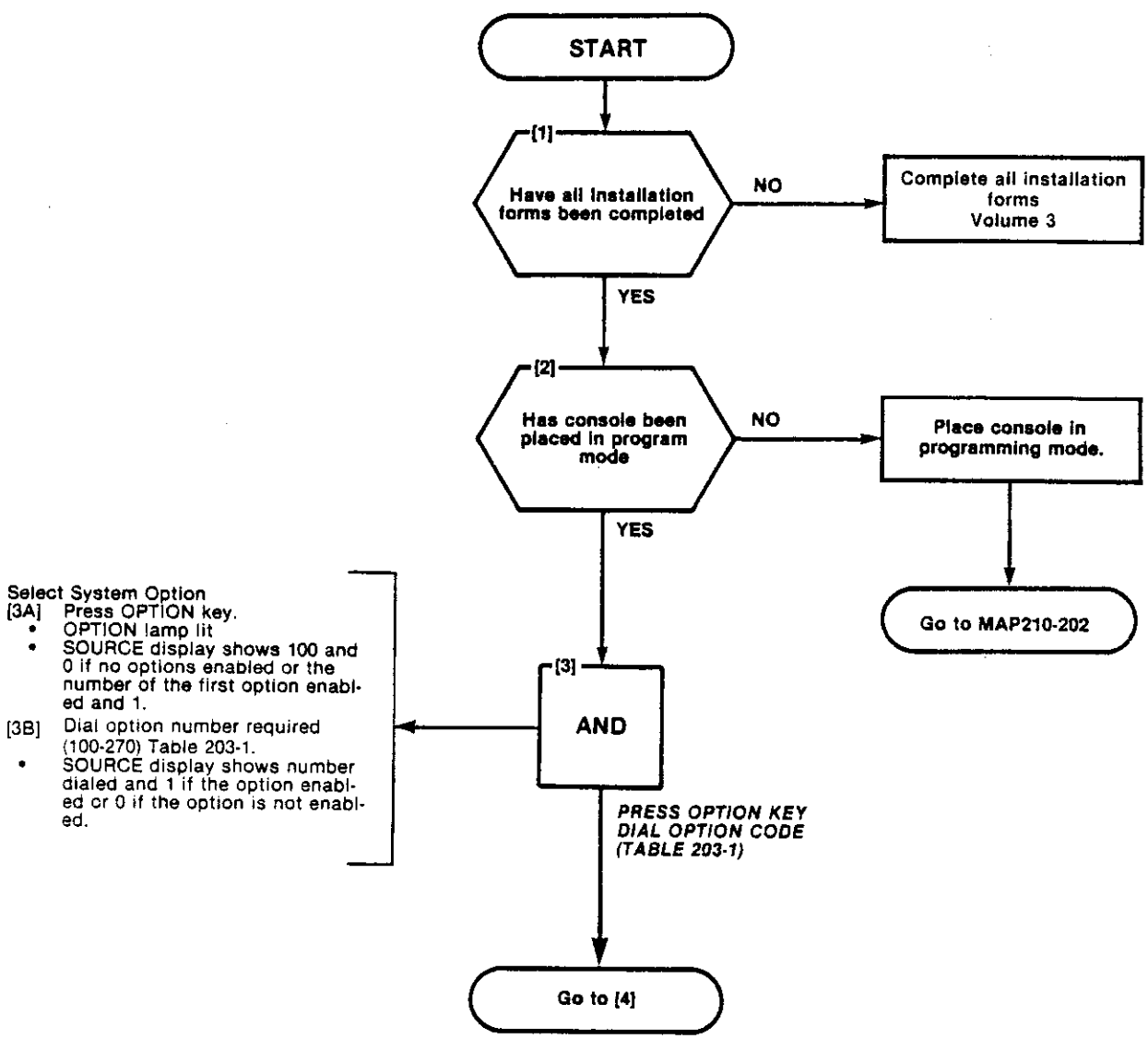

PROGRAM SYSTEM OPTIONS
MAP210-203
Issue 2. February 1982
Sheet 2 of 5

TABLE 203-1
SYSTEM OPTIONS

OPTION NAME	OPTION NUMBER	OPTION NAME	OPTION NUMBER
DISCRIMINATING RINGING	100	ATTENDANT CO TRUNK-CO TRUNK CONNECT ENABLE	129
TRANSFER DIAL TONE	101	ATTENDANT CO TRUNK-NON CO TRUNK CONNECT ENABLE	130
FLEXIBLE NIGHT SERVICE	102	ATTENDANT NON CO TRUNK-NON CO TRUNK CONNECT ENABLE	131
NIGHT SERVICE AUTOMATIC SWITCHING	103		
TAFAS AVAILABLE DURING DAY	104	CONTROLLED OUTGOING RESTRICTION SET-UP	132
OUTGOING TRUNK CAMP-ON	105	CONTROLLED STATION RESTRICTION SET-UP	133
OUTGOING TRUNK CALLBACK	106	CONTROLLED STATION TO STATION RESTRICTION SET-UP	134
CAN FLASH IF TALKING TO AN INCOMING TRUNK	107	ATTENDANT DISA CODE SET-UP ENABLE	135
CAN FLASH IF TALKING TO AN OUTGOING TRUNK	108	LIMITED WAIT FOR DIAL TONE	136
CAN FLASH IF TALKING TO STATION	109	MESSAGE WAITING SET-UP (LAMP)	137
CANNOT DIAL A TRUNK AFTER FLASHING	110	MESSAGE WAITING SET-UP (BELL)	138
CANNOT DIAL A TRUNK AFTER FLASHING IF HOLDING OR IN CONFERENCE WITH A TRUNK	111	ATTENDANT TIMED RECALL - CAMP-ON - 20s	139
		ATTENDANT TIMED RECALL - CAMP-ON - 40s	140
LOCKOUT ALARM ENABLE	112	ATTENDANT TIMED RECALL - DON'T ANSWER - 20s	141
TENANT SERVICE (SET AUTOMATICALLY WHEN TENANT SERVICE IS SELECTED WHEN PROGRAMMING)	113	ATTENDANT TIMED RECALL - DON'T ANSWER - 40s	142
		ATTENDANT TIMED RECALL - HOLD - 20s	143
TENANT SERVICE - SEPARATE CONSOLES	114	ATTENDANT TIMED RECALL - HOLD - 40s	144
		NIGHT SERVICE TIMEOUT - 20s	145
VACANT NUMBER INTERCEPT TO ATTENDANT	115	NIGHT SERVICE TIMEOUT - 40s	146
ILLEGAL ACCESS INTERCEPT TO ATTENDANT	116	CALL FORWARDING - DON'T ANSWER TIMEOUT -20s	147
DID/DIAL-IN/CCSA VACANT/ILLEGAL INTERCEPT TO ATTENDANT	117	CALL FORWARDING - DON'T ANSWER TIMEOUT -40s	148
		CALL FORWARDING - BUSY (SYSTEM, DID, DIAL-IN TIE TRUNK, CCSA)	149
ATTENDANT CAMP-ON	118		
ATTENDANT CONFERENCE	119	CALL FORWARDING - DON'T ANSWER (SYSTEM, DID, DIAL-IN TIE TRUNK, CCSA)	150
ATTENDANT BUSY OVERRIDE	120		
ATTENDANT SERIAL CALL	121	PARK AND CALL-HOLD RECALL - 2 MINUTES	151
BELL OFF ENABLE	122	PARK AND CALL-HOLD RECALL - 4 MINUTES	152
PAGE BUTTON ENABLE	123	END OF DIAL SIGNAL FOR OUTGOING TRUNKS (#)	153
NEW CALL TONE ENABLE	124	24 HOUR CLOCK	154
BOTH MODE STANDARD	125	FIRST DIGIT TOLL DENY	155
CALLBACK BUTTON ENABLE	126	MESSAGE REGISTRATION ENABLE	156
TRUNK BUSY-OUT ENABLE	127	MESSAGE REGISTRATION: COUNT ADDITIONAL SUPERVISIONS	157
BOTH BUTTON ENABLE	128		

TABLE 203-1
SYSTEM OPTIONS

OPTION NAME	OPTION NUMBER	OPTION NAME	OPTION NUMBER
MESSAGE REGISTRATION: TIMER = 20 SECONDS	158	AUTOMATIC WAKEUP PRINT	191
MESSAGE REGISTRATION: TIMER = 40 SECONDS	159	AUTOMATIC WAKEUP MUSIC ON HOLD	192
MESSAGE REGISTRATION: MULTIPLIER = 4 UNITS	160	ROOM MESSAGE REGISTER AUDIT ENABLE	193
MESSAGE REGISTRATION: MULTIPLIER = 3 UNITS	161	ROOM STATUS AUDIT ENABLE	194
MESSAGE REGISTRATION: MULTIPLIER = 2 UNITS	162	MESSAGE REGISTER & MESSAGE WAITING CHANGE	
MESSAGE REGISTRATION: SURCHARGE = 8 UNITS	163	PRINT ENABLE	195
MESSAGE REGISTRATION: SURCHARGE = 7 UNITS	164	IGNORE PRINT ENABLE	196
MESSAGE REGISTRATION: SURCHARGE = 6 UNITS	165	REMOTE SYSTEM RESET - PROTECTION OVERRIDE	197
MESSAGE REGISTRATION: SURCHARGE = 5 UNITS	166	EXTENSION NON-CO TRUNK TO TRUNK CONNECT ENABLE	198
MESSAGE REGISTRATION: SURCHARGE = 4 UNITS	167	MULTI DIGIT TOLL CONTROL ENABLE	199
MESSAGE REGISTRATION: SURCHARGE = 3 UNITS	168	TRAFFIC MEASUREMENT ENABLE	200
MESSAGE REGISTRATION: SURCHARGE = 2 UNITS	169	TRAFFIC MEASUREMENT EXTREME VALUE MODE	201
MESSAGE REGISTRATION: SURCHARGE = 1 UNIT	170	TRAFFIC MEASUREMENT COMPACT REPORT	202
DID TO NON-CO TRUNKS VIA ATTENDANT INHIBIT	171	TRAFFIC MEASUREMENT POLLING	203
GUEST ROOM BUTTON ENABLE	172	TRAFFIC MEASUREMENT AUTOPRINT	204
ROOM STATUS BUTTON ENABLE & DISPLAY ENABLE	173	IDENTIFIED TRUNK GROUP ENABLE	205
DO NOT DISTURB INTERCEPT TO ATTENDANT	174	INHIBIT AUTOMATIC SUPERVISION	206
DO NOT DISTURB AND MESSAGE WAITING DISPLAYS	175	PRINTER CARRIAGE RETURN DELAY	207
SINGLE DIGIT DIALING ENABLE	176	ZERO MESSAGE REGISTER AFTER ROOM REGISTER AUDIT	208
SINGLE DIGIT DIALING TIME-OUT = 3 SECONDS	177	TRAFFIC MEASUREMENT: CONSOLE FUNCTION ENABLE	209
SINGLE DIGIT DIALING TIME-OUT = 5 SECONDS	178	ATTENDANT PRINTER CONTROL ENABLE	210
ATTENDANT STATION BUSY-OUT ENABLE	179	SYSTEM ID ENABLE	211
FLASH TIMING = 0.7 SECONDS	180	NIGHTBELL 3 WITH MINOR ALARM ENABLE	212
FLASH TIMING = 0.9 SECONDS	181	PRINTOUTS: EXTRA LINE FEEDS	213
FLASH TIMING = 1.1 SECONDS	182	WAKE-UP ALARM ENABLE	214
TRUNK RECALL PARTIAL INHIBIT	183	RESERVED	215
RESERVED	184	SPEED CALL ENABLE	216
RESERVED	185	SPEED CALL PROGRAMMING ENABLE	217
RESERVED	186	SPEED CALL CONFIDENTIAL NUMBER DISPLAY ENABLE	218
RESERVED	187	RESERVED	219
RESERVED	188	STATION MESSAGE DETAIL RECORDING	
RESERVED	189	OUTGOING CALLS	220
AUTOMATIC WAKEUP ENABLE	190	STATION MESSAGE DETAIL RECORDING INCOMING CALLS	221

TABLE 203-1 (CONT'D)
SYSTEM OPTIONS

OPTION NAME	OPTION NUMBER	OPTION NAME	OPTION NUMBER
SMDR: EXTENDED RECORD	222	INCOMING TO OUTGOING CALL-FORWARD ENABLE	251
SMDR: RECORD METER PULSES	223	A.R.S. ENABLE	252
SMDR: INDICATE LONG CALLS	224	A.R.S. UNRESTRICTED OFFICE CODE ENABLE	253
SMDR: DROP INCOMPLETE OUTGOING CALLS	225	MITEL PRINTER CONDENSED SMDR PRINT	254
SMDR: RECORD ONLY INCOMING CO CALLS (CCSA & NON DIAL TIE TRUNKS)	226	PRINTER TRANSMIT ADDITIONAL NULLS	255
SMDR: DROP CALLS OF LESS THAN 8 DIGITS	227	RANGE PROGRAMMING ENABLE	256
DISCRIMINATING DIAL TONE	228	HANDS-FREE ENABLE	257
SPECIAL ANI FEATURE	229	EXTERNAL CALL-FORWARDING ENABLE	258
ACCOUNT CODE ENABLE	230	CALL FORWARDING DON'T ANSWER TIMEOUT - 10s	259
ACCOUNT CODE LENGTH: 4 DIGITS	231	CUSTOMER PRINT-OUT ENABLE	260
ACCOUNT CODE LENGTH: 8 DIGITS	232	SERIAL CALL OVERRIDE FLASH BUTTON ENABLE	261
ACCOUNT CODE LENGTH: 12 DIGITS	233	DATA DEMULTIPLEX ENABLE	262
VARIABLE LENGTH ACCOUNT CODES	234	MUSIC ON HOLD DISABLE	263
CUSTOMER PROGRAMMING ENABLE	235	RETURN A.R.S. DIAL TONE	264
CUSTOMER RANGE AND TENENT PROGRAMMING ENABLE	236	RINGING TIMEOUT 1 MINUTE	265
CUSTOMER PROGRAMMING OF SYSTEM OPTIONS ENABLE	237	DIGIT TRANSLATION PLAN 1	266
CUSTOMER PROGRAMMING OF COS DEFINITIONS ENABLE	238	DIGIT TRANSLATION PLAN 2	267
CUSTOMER PROGRAMMING OF FEATURES ENABLE	239	DIGIT TRANSLATION PLAN 3	268
CUSTOMER PROGRAMMING OF EXTENSIONS ENABLE	240	A.R.S. DIAL 0 TIMEOUT 5 SECS.	269
CUSTOMER PROGRAMMING OF TRUNKS ENABLE	241	A.R.S. DIAL 0 TIMEOUT 10 SECS.	270
CUSTOMER PROGRAMMING OF HUNT GROUPS ENABLE	242		
CUSTOMER PROGRAMMING OF TRUNK GROUPS ENABLE	243		
CUSTOMER PROGRAMMING OF TOLL CONTROL ENABLE	244		
CUSTOMER PROGRAMMING OF SPEED CALL ENABLE	245		
CUSTOMER PROGRAMMING OF A.R.S. ENABLE	246		
RESERVED	247		
RESERVED	248		
RESERVED	249		
RESERVED	250		

PROGRAM SYSTEM OPTIONS
MAP210-203
Issue 2. February 1982
Sheet 5 of 5

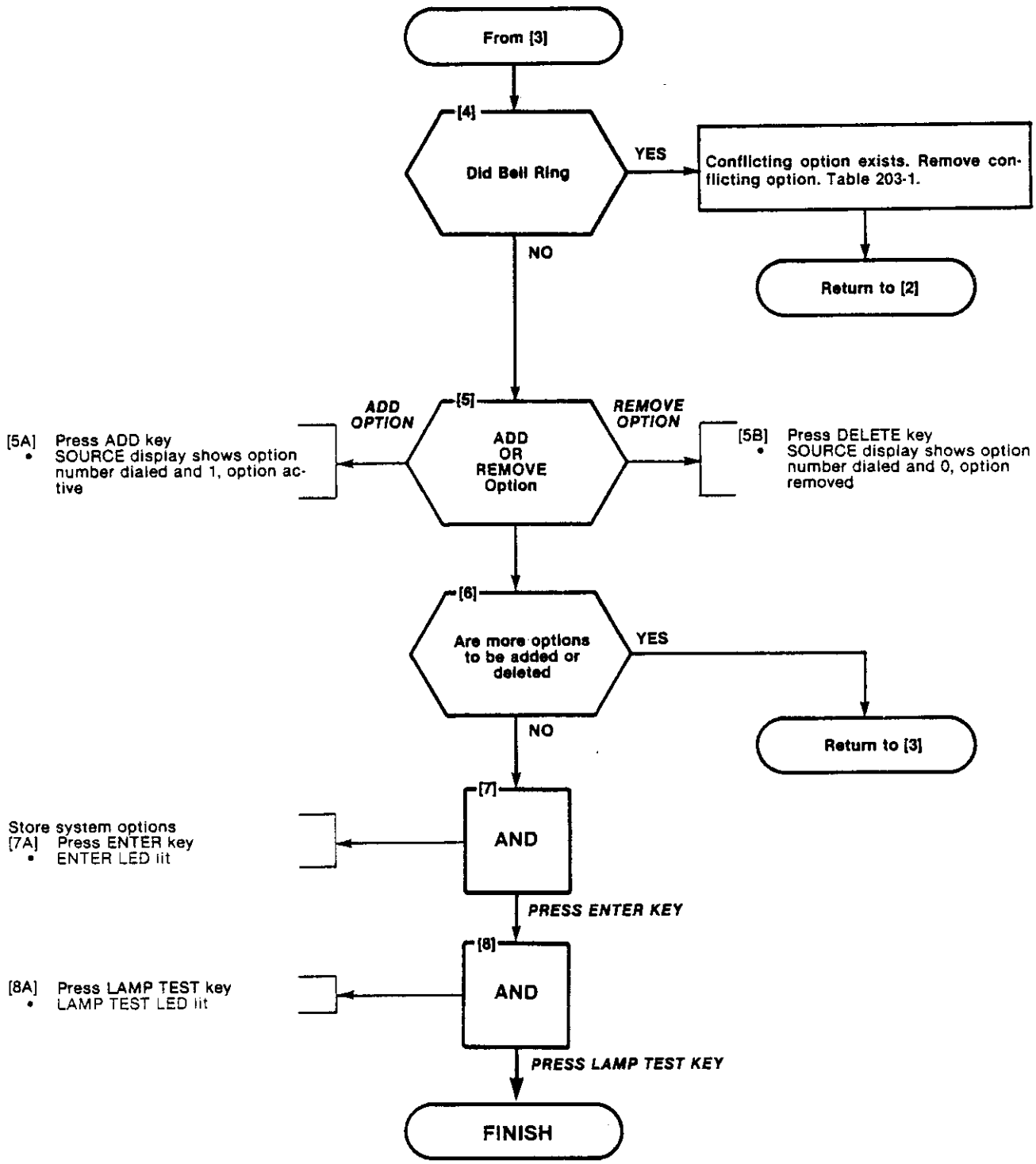

PROGRAM COS OPTIONS
MAP210-204
Issue 2. February 1982
Sheet 1 of 6

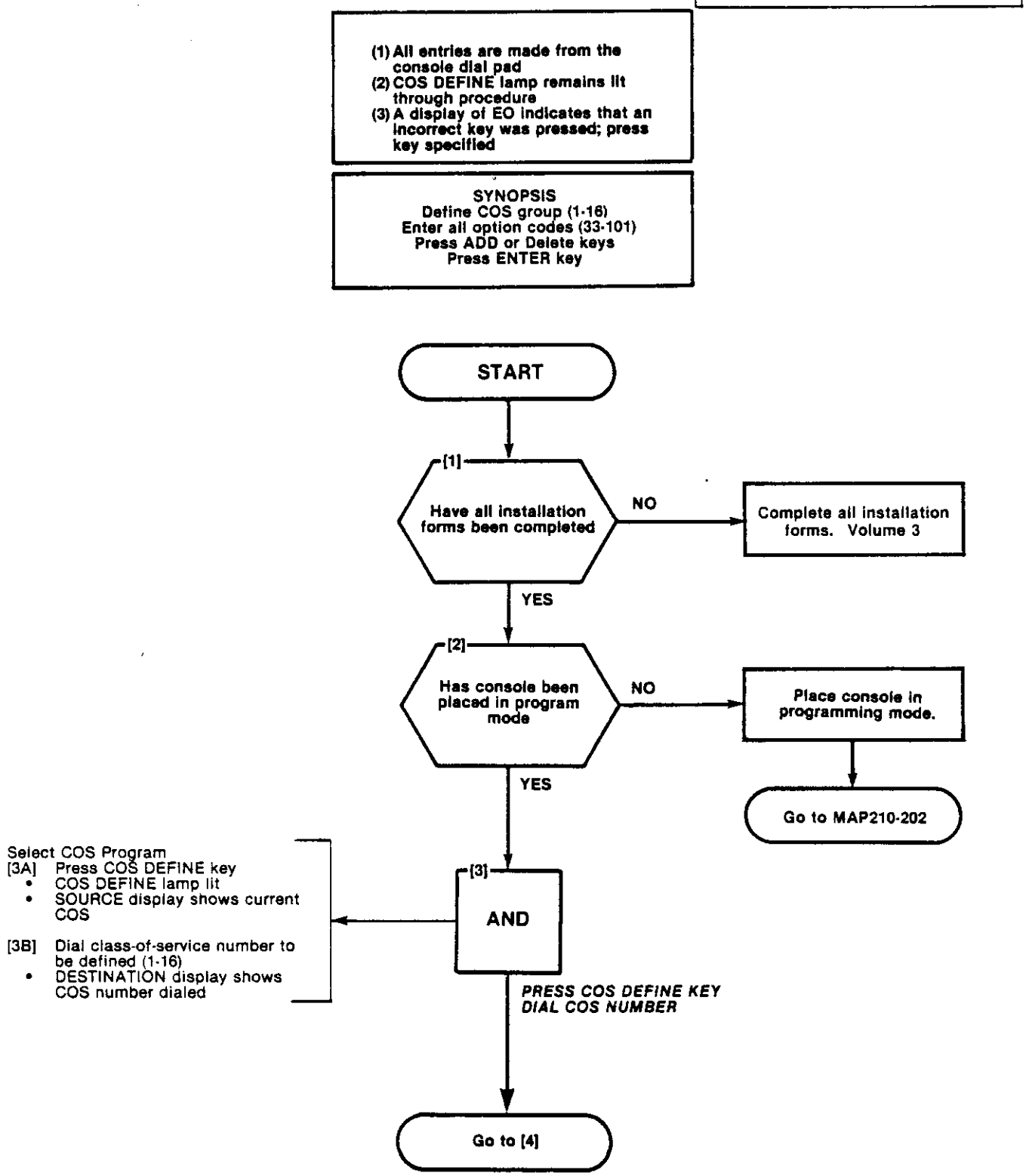

TABLE 204-1
CLASS-OF-SERVICE OPTIONS

OPTION #	OPTION NAME
33	AUTOMATIC CALLBACK
34	CALL FORWARDING - BUSY
35	CALL FORWARDING - DON'T ANSWER
36	CALL FORWARDING - FOLLOW ME
37	CALL PARK
38	NEVER A FORWARDEE
39	DIRECTED CALL PICKUP
40	EXECUTIVE BUSY OVERRIDE
41	DATA SECURITY
42	STATION OVERRIDE SECURITY
43	INWARD RESTRICTION (DID)
44	ORIGINATE ONLY
45	RECEIVE ONLY
46	FLASH DISABLE
47	NEVER A CONSULTEE
48	BROKER'S CALL
49	STATION CONFERENCE
50	MEET-ME CONFERENCE
51	CAMP-ON
52	DO NOT OVERFLOW
53	PAGING ACCESS
54	TAFAS ACCESS
55	HOLD PICKUP
56	ACCOUNT CODE ACCESS
57	MANUAL LINE
58	CONTACT MONITOR
59	NON-CO TRUNKS VIA ATTENDANT INHIBIT
60	CO TRUNKS VIA ATTENDANT INHIBIT
61	NO DIAL TONE
62	FLASH FOR ATTENDANT
63	H/M STN-STN RESTRICT APPLIES
64	MESSAGE REGISTER
65	TRUNK GROUP 1 ACCESS
66	TRUNK GROUP 2 ACCESS
67	TRUNK GROUP 3 ACCESS
68	TRUNK GROUP 4 ACCESS
69	TRUNK GROUP 5 ACCESS
70	TRUNK GROUP 6 ACCESS
71	TRUNK GROUP 7 ACCESS
72	TRUNK GROUP 8 ACCESS
73	TRUNK GROUP 9 ACCESS
74	TRUNK GROUP 10 ACCESS
75	TRUNK GROUP 11 ACCESS
76	TRUNK GROUP 12 ACCESS
77	MESSAGE WAITING APPLIES
78	ROOM DO NOT DISTURB ENABLE
79	CALL HOLD AND RETRIEVE ACCESS
80	ROOM STATUS APPLIES
81	CALL FORWARD SYSTEM INHIBIT
82	ALARM CALL ENABLE
83	FORCED ACCOUNT CODE ENTRY
84	NO SMDR RECORD APPLIES
85	SPEED CALL TABLE 1 & 2 ACCESS
86	SPEED CALL TABLE 3 & 4 ACCESS
87	SPEED CALL TABLE 5 & 6 ACCESS
88	SPEED CALL TABLE 7 & 8 ACCESS
89	SPEED CALL TABLE 9 & 10 ACCESS
90	SPEED CALL TABLE 11 & 12 ACCESS
91	SPEED CALL TABLE 13 & 14 ACCESS
92	SPEED CALL TABLE 15 & 16 ACCESS
93	SPEED CALL TABLE 17 & 18 ACCESS
94	CANNOT DIAL A TRUNK AFTER FLASHING
95	HANDS FREE STATION
96	A.R.S. RESTRICTED
97	EXTERNAL CALL FORWARD ENABLE
98	TRANSFER WITH PRIVACY
99	INCOMING TRUNK ROTARY DIAL ONLY
100	A.R.S. ALLOWED
101	EARTH GROUND BUTTON

TABLE 204-2
OPTION CONFLICTS

	Option			Option
45	Receive Disable	and	58	Contact Monitor
46	Flash Disable	and	48	Brokers Call
46	Flash Disable	and	49	Station Conference
46	Flash Disable	and	62	Flash for Attendant
48	Brokers Call	and	49	Station Conference
62	Flash for Attendant	and	49	Station Conference
62	Flash for Attendant	and	48	Brokers Call

PROGRAM COS OPTIONS
MAP210-204
Issue 2, February 1982
Sheet 2 of 6

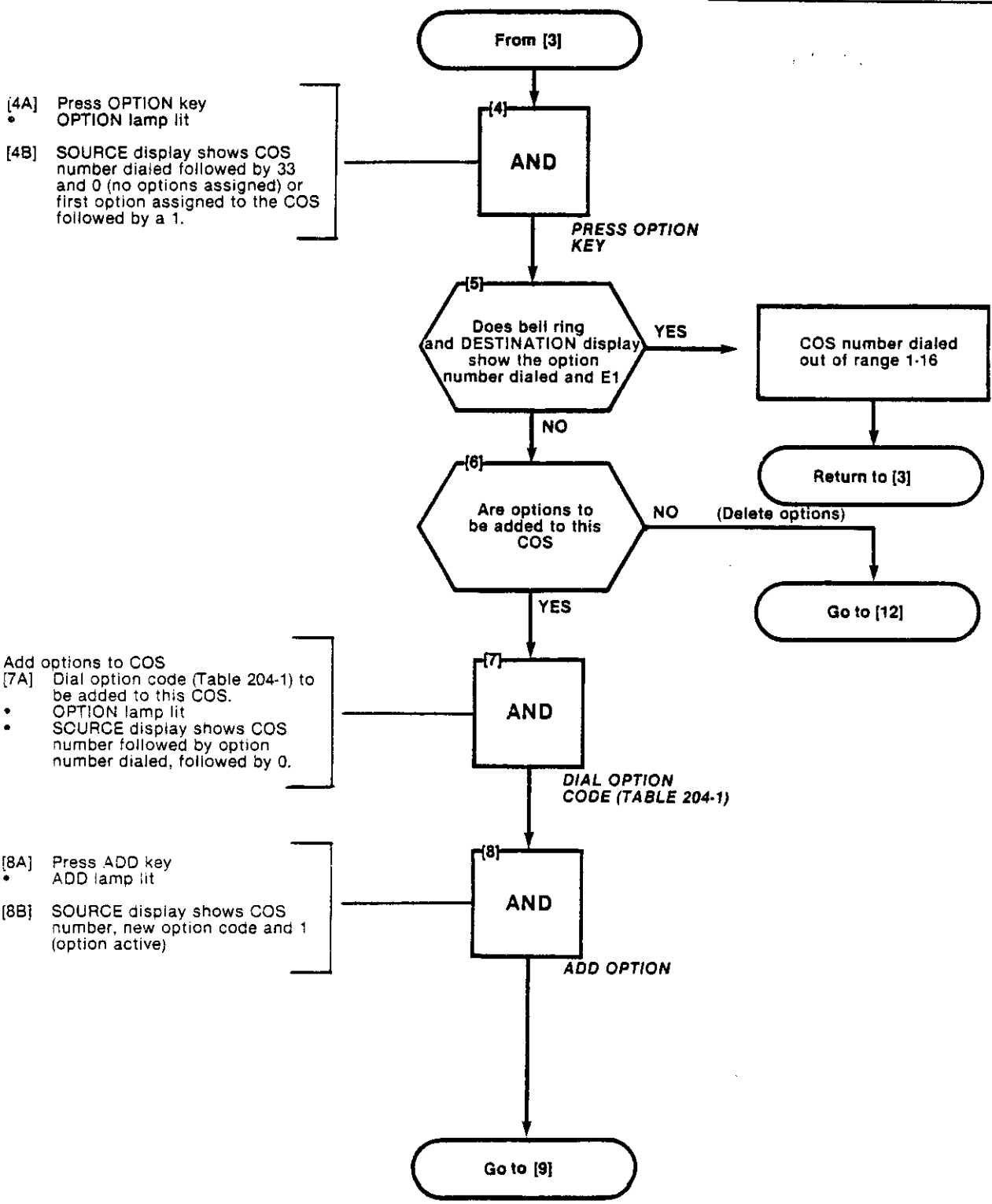

PROGRAM COS OPTIONS
MAP210-204
Issue 2. February 1982
Sheet 4 of 6

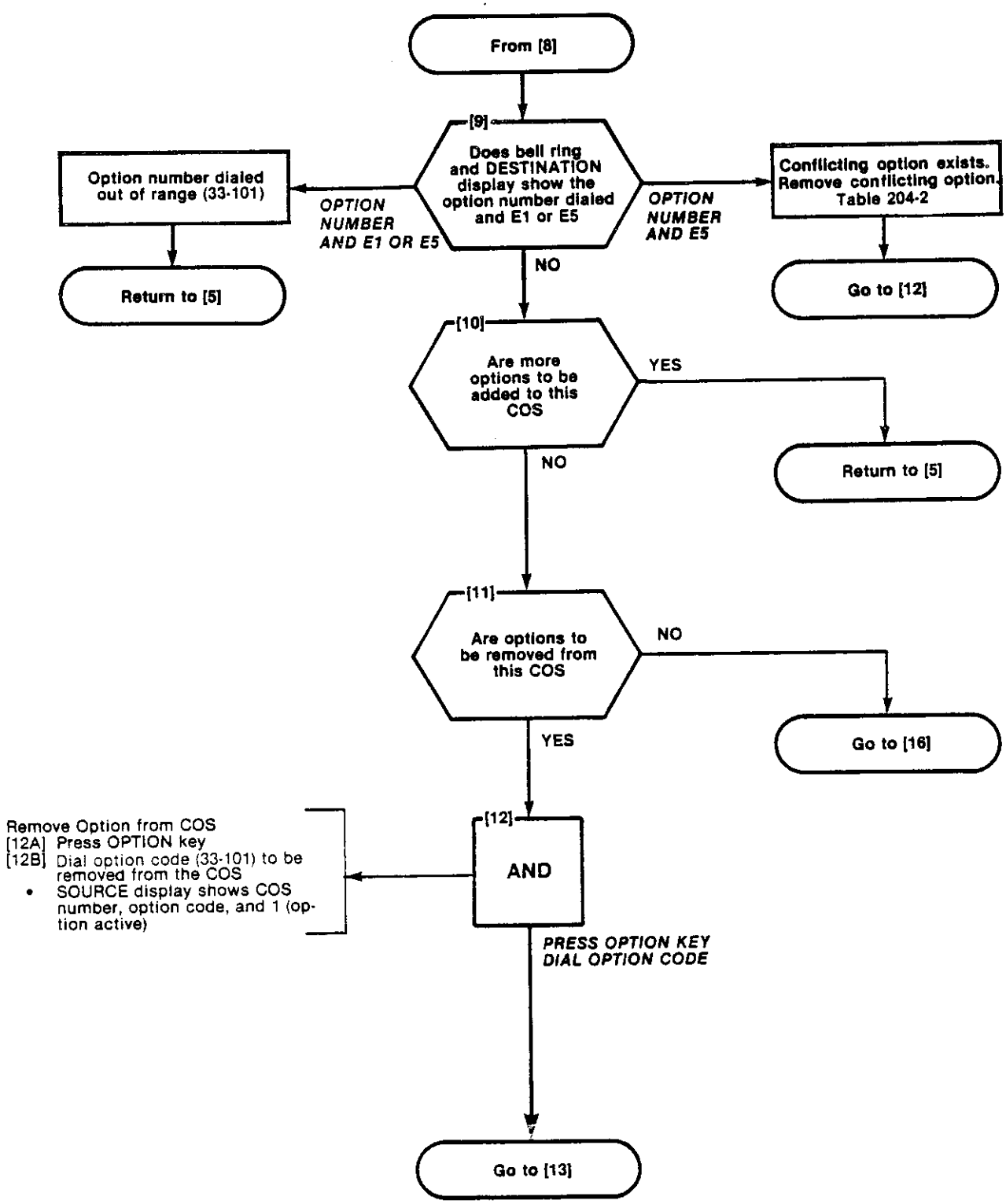

PROGRAM COS OPTIONS
MAP210-204
Issue 2. February 1982
Sheet 5 of 6

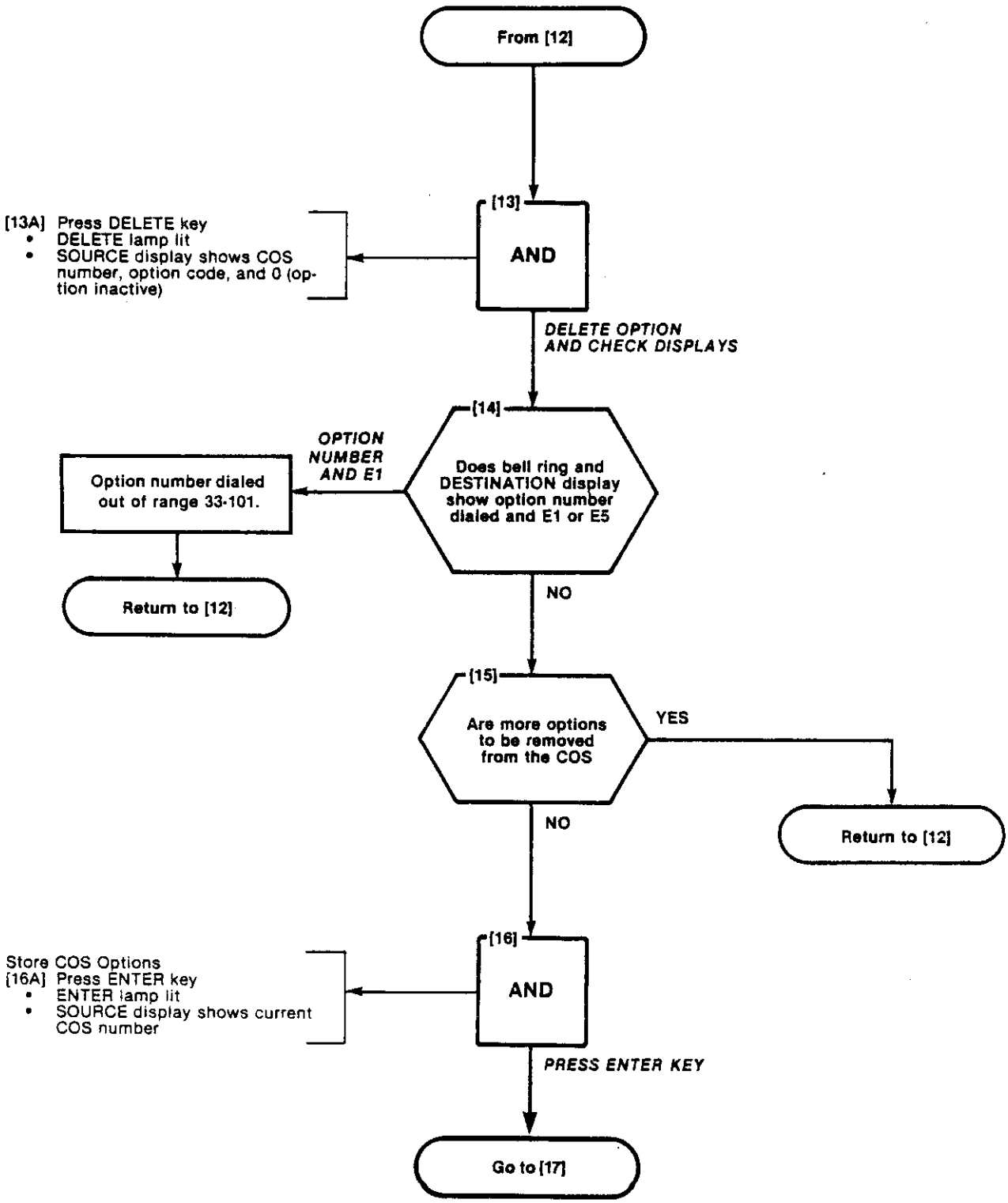

PROGRAM COS OPTIONS
MAP210-204
Issue 2. February 1982
Sheet 6 of 6

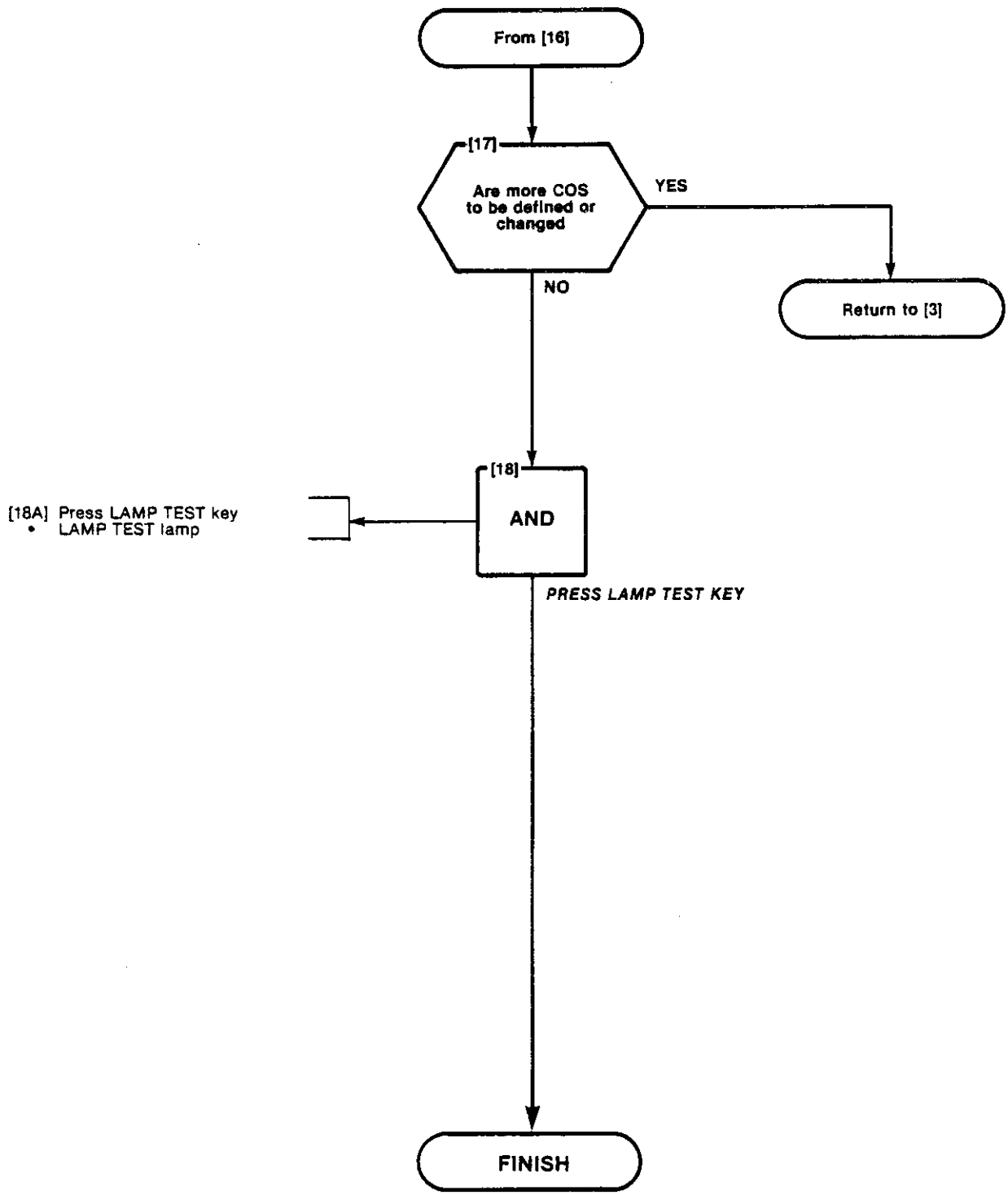

ASSIGN FEATURE ACCESS CODES
MAP210-205
Issue 2. February 1982
Sheet 1 of 3

NOTES

1. **All entries are made from the console dial pad.**
2. **FEATURE lamp lit throughout procedure.**
3. **A display of EO indicates that an incorrect key was pressed, check procedure and press correct key.**

SYNOPSIS
Enter feature number. (1-46)
Assign or delete access code.
Press ENTER key.
Repeat for all required features.

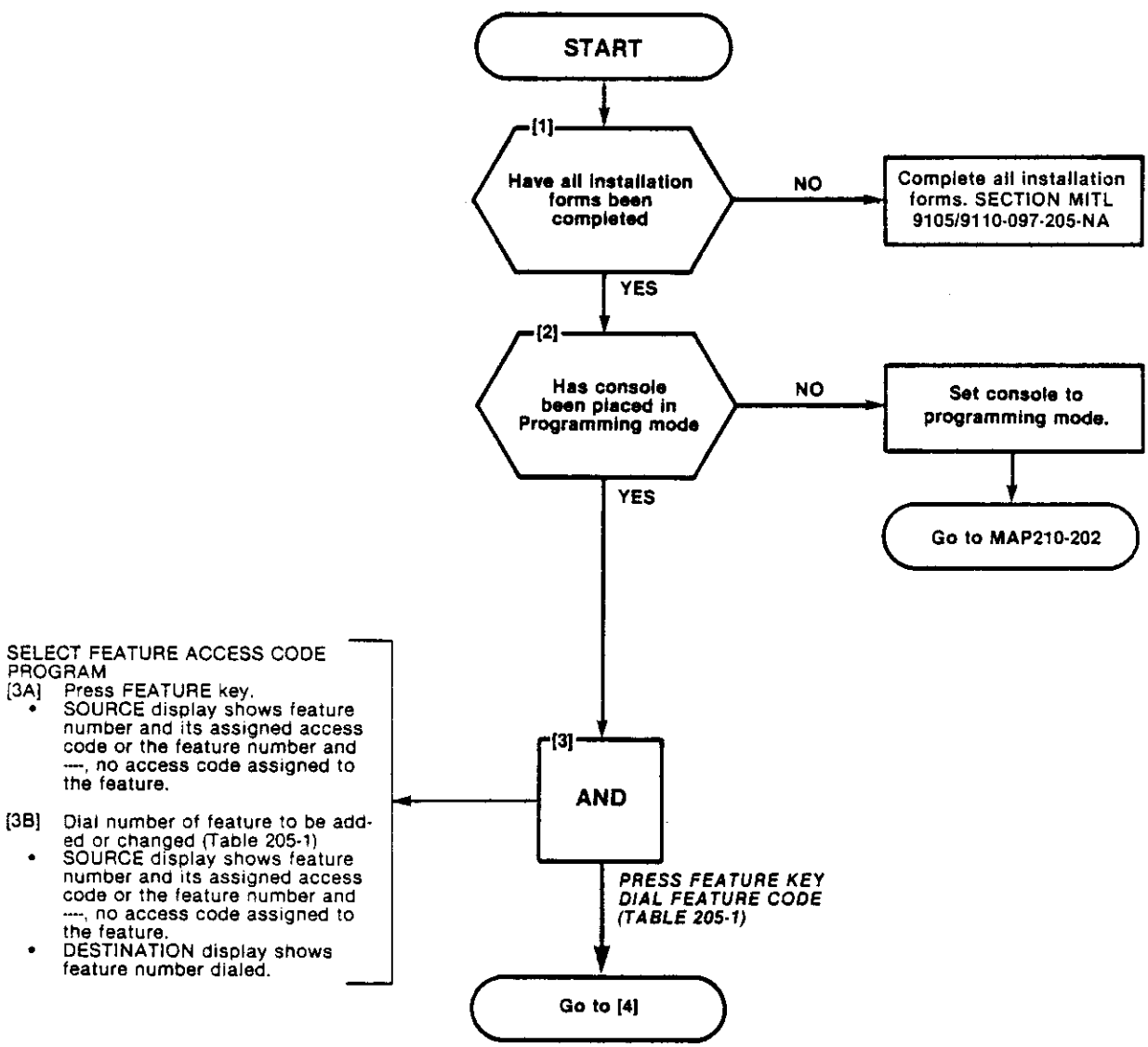

ASSIGN FEATURE ACCESS CODES
MAP210-205
Issue 2. February 1982
Sheet 2 of 3

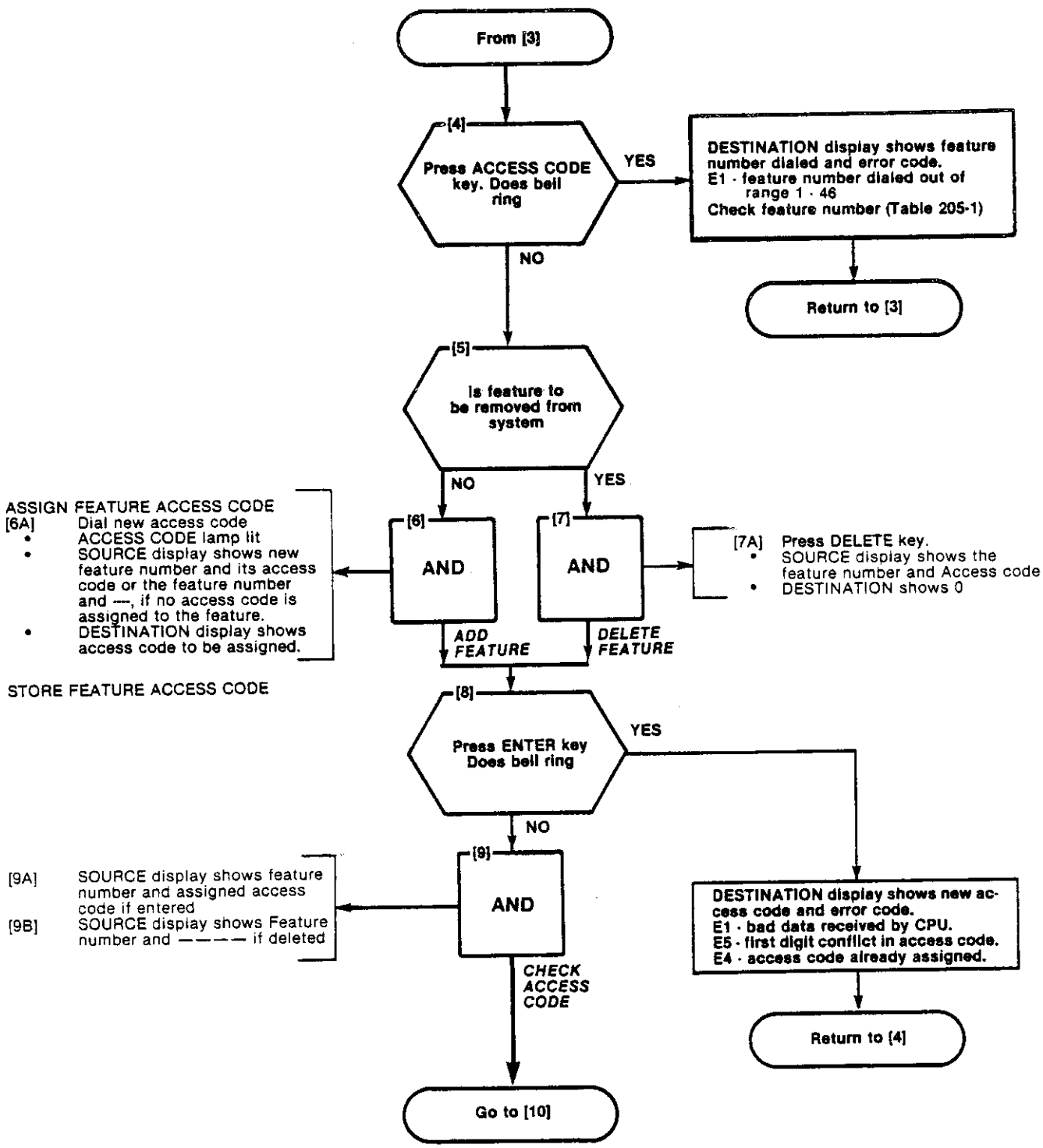

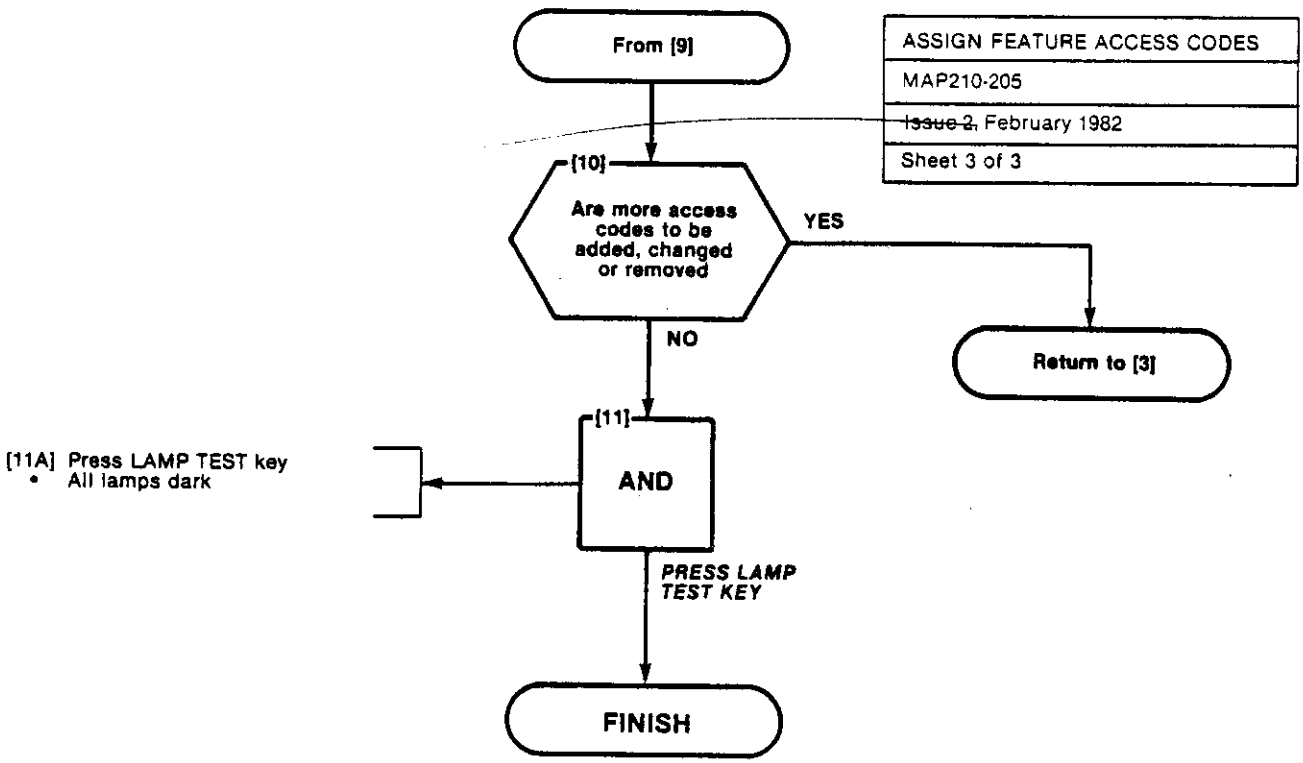

TABLE 205-1
FEATURE ASSIGNMENTS

DESCRIPTION	FEATURE NUMBER		
ATTENDANT ACCESS	1	CALL RETRIEVE (REMOTE)	27
CALLBACK - DON'T ANSWER	2	ROOM STATUS UPDATE (MAID IN ROOM)	28
CALL FORWARD - BUSY	3	PROGRAMMING SECURITY CODE	29
CALL FORWARD - DON'T ANSWER	4	ALARM CALL (AUTOMATIC WAKEUP)	30
CALL FORWARD - FOLLOW ME	5	ACCOUNT CODE	31
CALL PARK	6	SPEED CALL	32
DIAL CALL PICKUP	7	ASSIGN ACCESS CODES TO FEATURES 33-42 FOR TRUNK TRUNK GROUP 1 IF NECESSARY	
DIRECTED CALL PICKUP	8		
MEET ME CONFERENCE	9	TRUNK GROUP 1 ACCESS CODE	33
PAGER 1	10	TRUNK GROUP 1 ACCESS CODE	34
PAGER 2	11	TRUNK GROUP 1 ACCESS CODE	35
HOLD PICKUP ACCESS	12	TRUNK GROUP 1 ACCESS CODE	36
PAGER 1 AND 2	13	TRUNK GROUP 1 ACCESS CODE	37
TAFAS - ALL	14	TRUNK GROUP 1 ACCESS CODE	38
TAFAS - 1	15	TRUNK GROUP 1 ACCESS CODE	39
TAFAS - 2	16	TRUNK GROUP 1 ACCESS CODE	40
TAFAS - 3	17	TRUNK GROUP 1 ACCESS CODE	41
ATTENDANT FUNCTION	18	TRUNK GROUP 1 ACCESS CODE	42
MAINTENANCE FUNCTION	19	CUSTOMER PROGRAMMING SECURITY CODE	43
DID ATTENDANT ACCESS CODE	20	A.R.S. ACCESS CODE	44
DIRECT INWARD SYSTEM ACCESS	21	HANDS-FREE ACTIVATION	45
EXECUTIVE BUSY OVERRIDE (SINGLE DIGIT) ***	22	CALL FORWARD BUSY — DON'T ANSWER	46
CALLBACK - BUSY (SINGLE DIGIT) ***	23		
ROOM DO NOT DISTURB	24		
CALL HOLD	25		
CALL RETRIEVE (LOCAL)	26		

*** FIRST DIGIT CONFLICT ALLOWED WITH OTHER ACCESS CODES

PROGRAM EXTENSIONS
MAP210-206
Issue 2. February 1982
Sheet 1 of 8

NOTES

(1) All entries are made from the console dial pad.
(2) EXTN lamp lit throughout procedure.
(3) A display of E0 indicates that an incorrect key has been pressed. Press the key specified in the MAP.

SYNOPSIS

Select required tenants (1-4) if tenanting required.
Enter EXTN programming.
Enter extension equipment number.
Enter extension number.
Enter COS number.
Enter toll allow/deny or COR 1, 2, 3.
Enter busy lamp position number.
Enter pickup group number.
Press ENTER key.

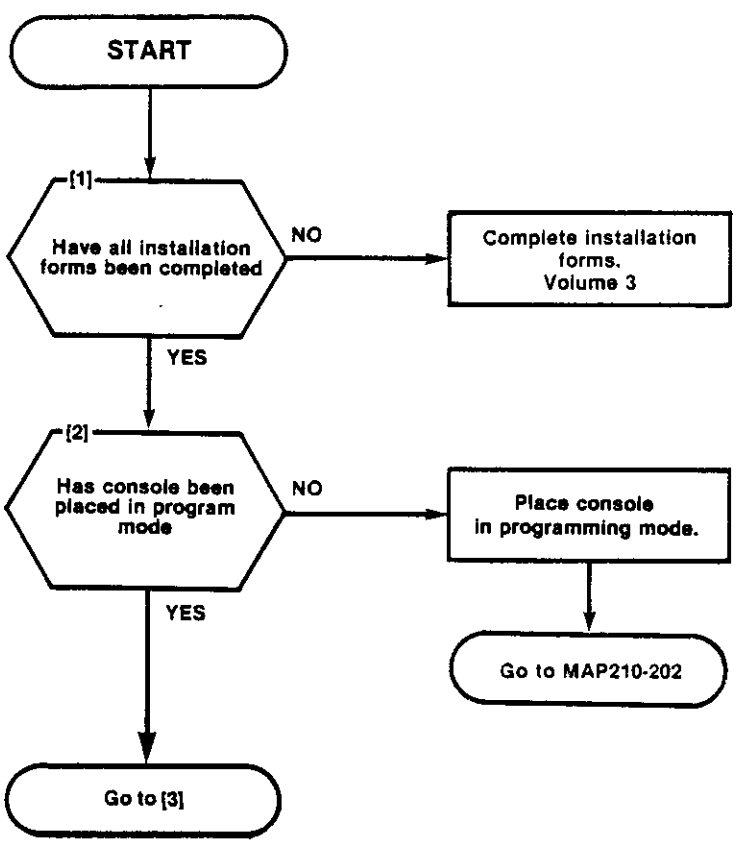

PROGRAM EXTENSIONS
MAP210-206
Issue 2. February 1982
Sheet 2 of 8

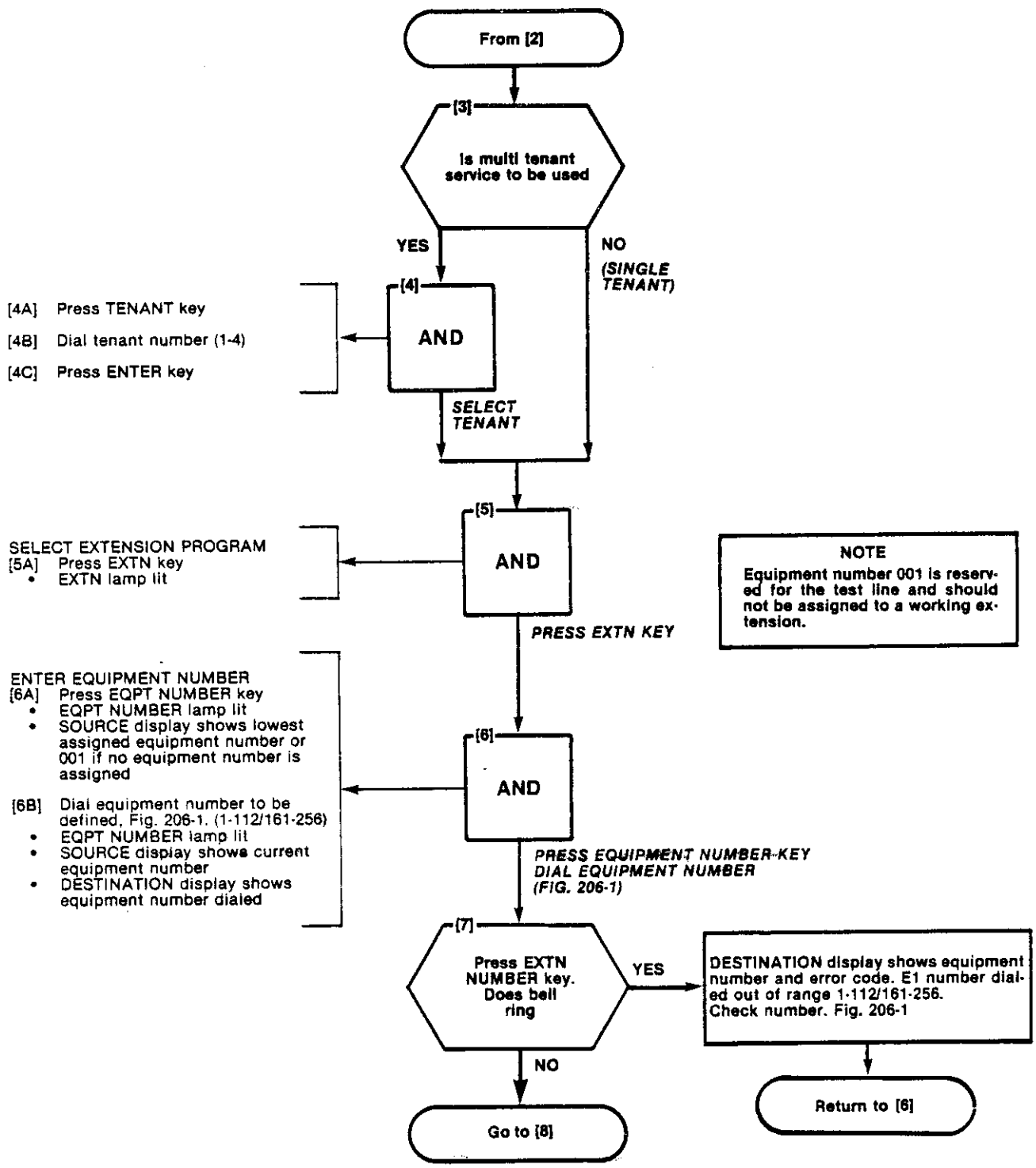

HARDWARE POSITION NUMBER	PLUG 7						PLUG 9						PLUG 11								EXTENSION UNIT NO.	TRUNK UNIT NO. (4 TRUNK)	TRUNK UNIT NO. (2 TRUNK)
	161	169	177	185	193	201	209	217	225	233	241	249									1		
	162	170	178	186	194	202	210	218	226	234	242	250									2	1	1
	163	171	179	187	195	203	211	219	227	235	243	251									3		
	164	172	180	188	196	204	212	220	228	236	244	252									4	2	
	165	173	181	189	197	205	213	221	229	237	245	253									5		
	166	174	182	190	198	206	214	222	230	238	246	254									6	3	2
	167	175	183	191	199	207	215	223	231	239	247	255									7		
	168	176	184	192	200	208	216	224	232	240	248	256									8	4	
	1	2	3	4	5	6	7	8	9	10	11	12	13	14	15	16	17	18	19	20	21	22	CARD POSITION	
	31	32	33	34	35	36	37	38	39	40	41	42	43	44	45	46	47	48	49	50	51	52	SLOT NUMBER	
	PLUG 8						PLUG 10						PLUG 12											

SHELF 2 (SX-200 ONLY)

HARDWARE POSITION NUMBER	PLUG 1						PLUG 3						PLUG 5								EXTENSION UNIT NO.	TRUNK UNIT NO. (4 TRUNK)	TRUNK UNIT NO. (2 TRUNK)
	001	009	017	025	033	041	049	057	065	073	081	089	097	105							1		
	002	010	018	026	034	042	050	058	066	074	082	090	098	106							2	1	1
	003	011	019	027	035	043	051	059	067	075	083	091	099	107					RESERVED		3		
	004	012	020	028	036	044	052	060	068	076	084	092	100	108					FOR		4	2	
	005	013	021	029	037	045	053	061	069	077	085	093	101	109					COMMON		5		
	006	014	022	030	038	046	054	062	070	078	086	094	102	110	RECEIVER NO. 1	CONSOLE CONTROL CARD	CONSOLE CONTROL CARD	TONE CONTROL	CONTROLS		6	3	2
	007	015	023	031	039	047	055	063	071	079	087	095	103	111							7		
	008	016	024	032	040	048	056	064	072	080	088	096	104	112							8	4	
	1	2	3	4	5	6	7	8	9	10	11	12	13	14	15	16	17	18	19	20	21	22	CARD POSITION	
	1	2	3	4	5	6	7	8	9	10	11	12	13	14	15	16	17	18	19	20	21	22	SLOT NUMBER	
	PLUG 2						PLUG 4						PLUG 6											

642

SHELF 1

NOTES: 1. EQUIPMENT POSITION 001 IS RESERVED FOR THE TEST LINE AND MUST THEREFORE BE EQUIPPED WITH A LINE CARD.
2. TRUNK EQUIPMENT NUMBER IS SAME AS INDIVIDUAL TRUNK ACCESS CODE.

Fig. 206-1 Hardware/Equipment Numbering

PROGRAM EXTENSIONS
MAP210-206
Issue 2. February 1982
Sheet 4 of 8

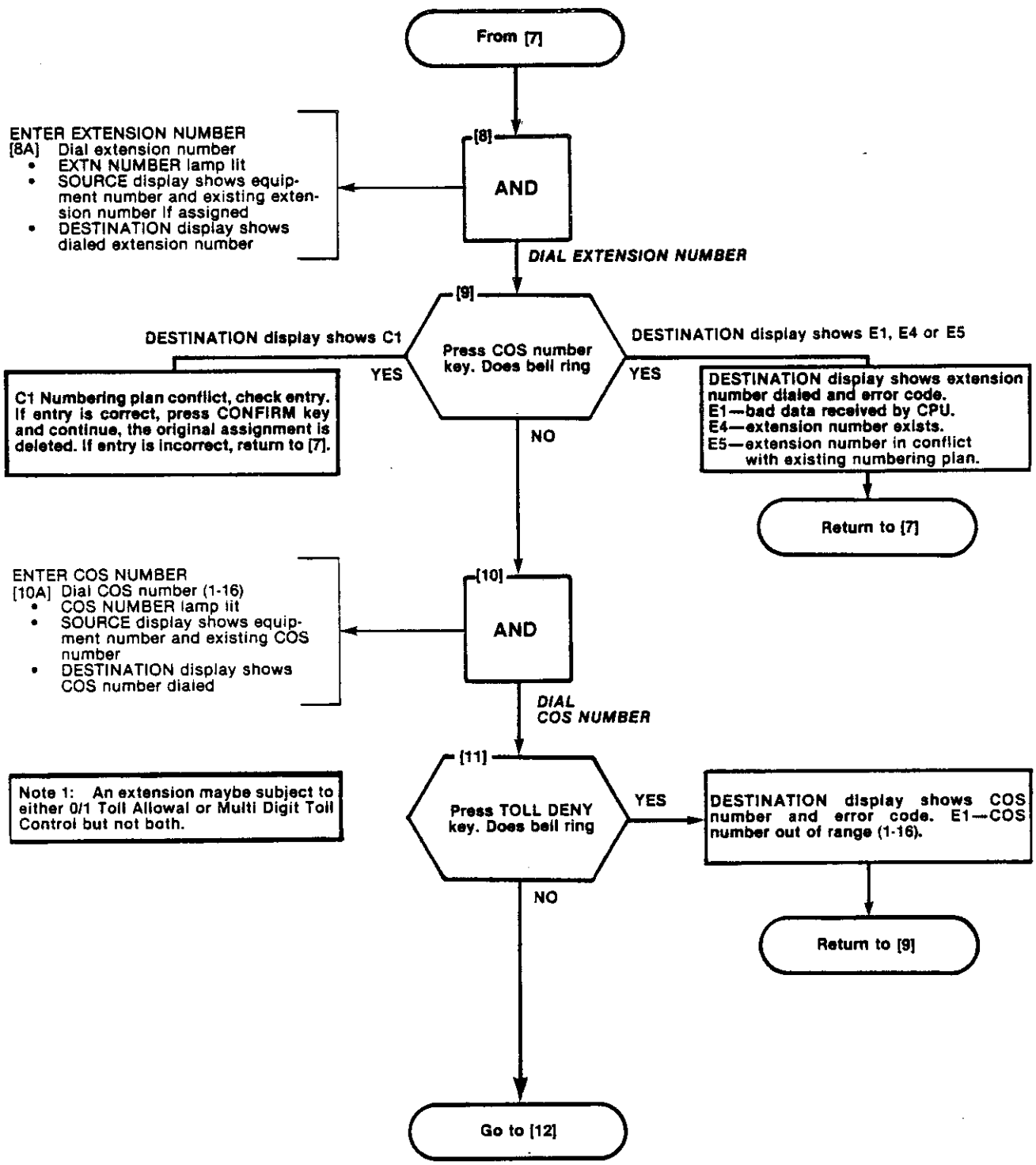

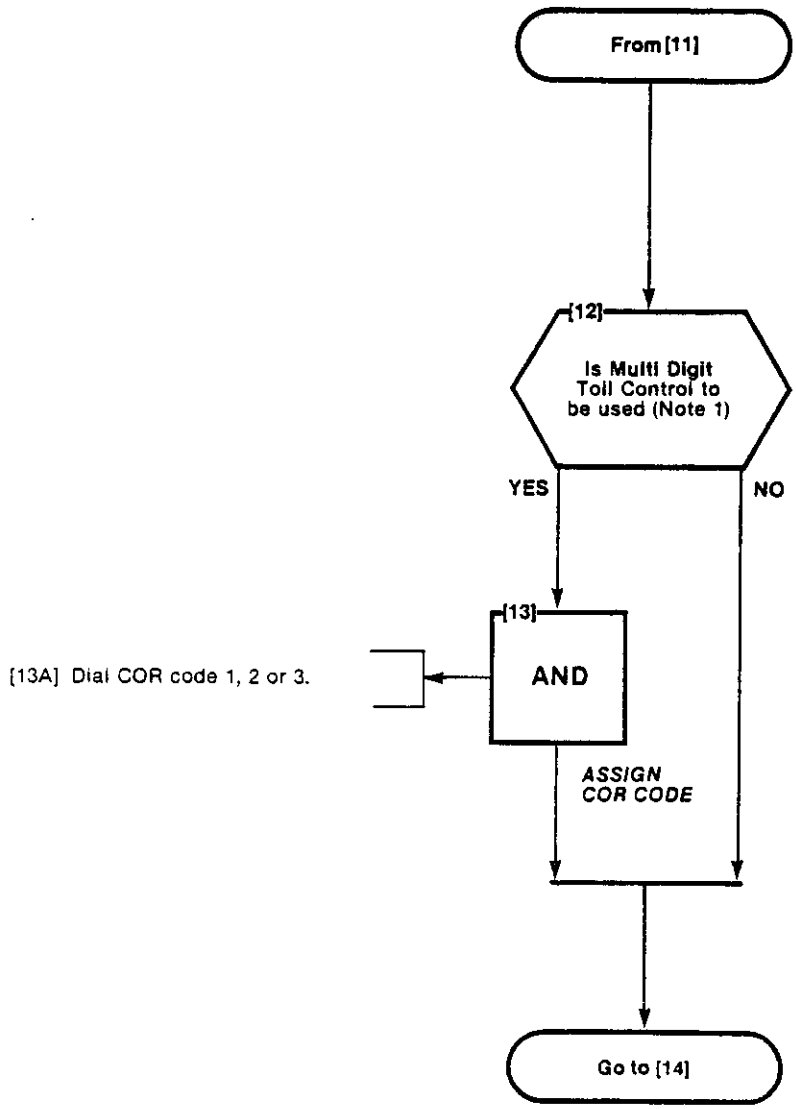
From [11]
[12]
Is Multi Digit Toll Control to be used (Note 1)
YES
NO
[13]
AND
[13A] Dial COR code 1, 2 or 3.
ASSIGN COR CODE
Go to [14]

PROGRAM EXTENSIONS
MAP210-206
Issue 2, February 1982
Sheet 6 of 8

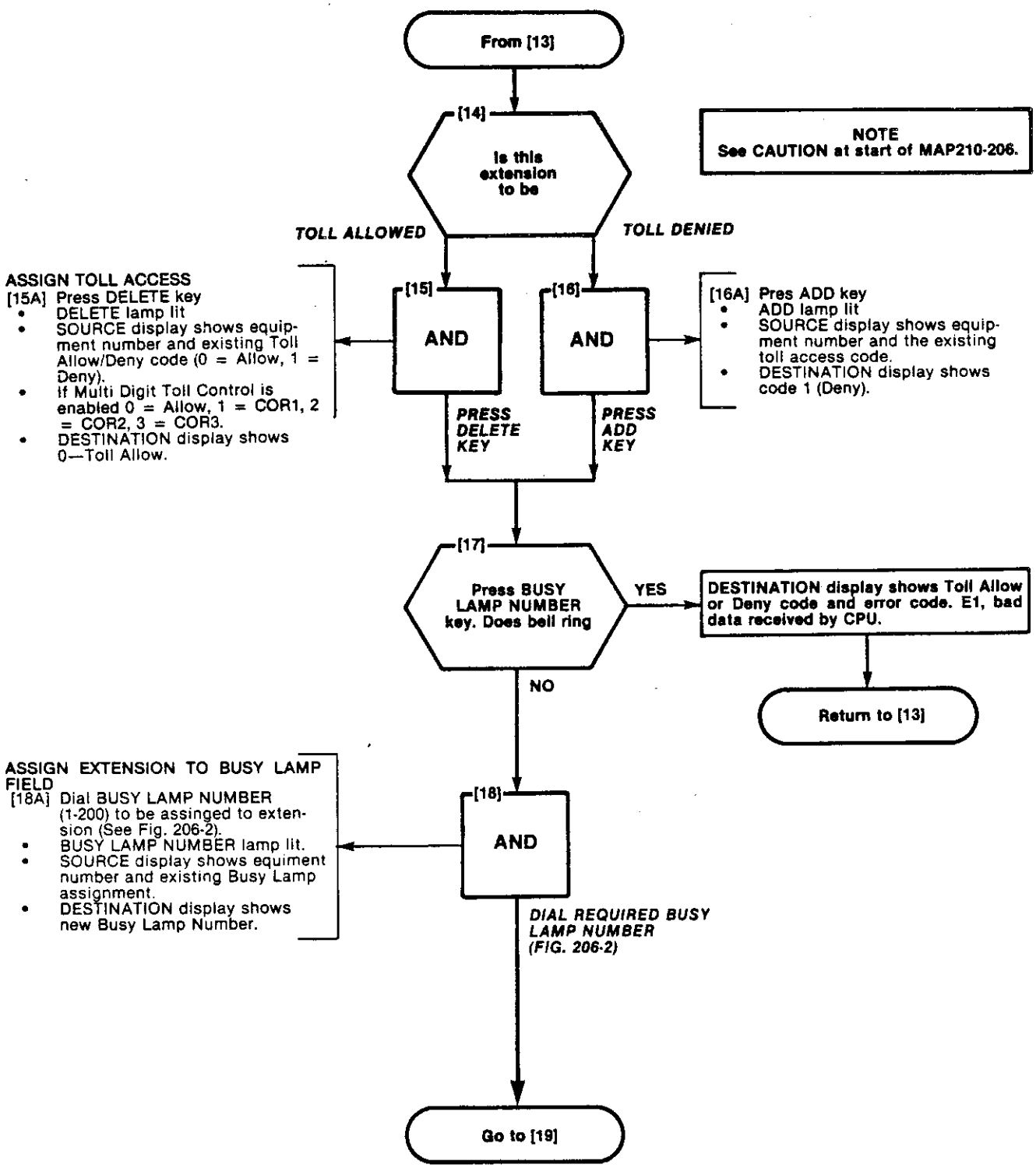

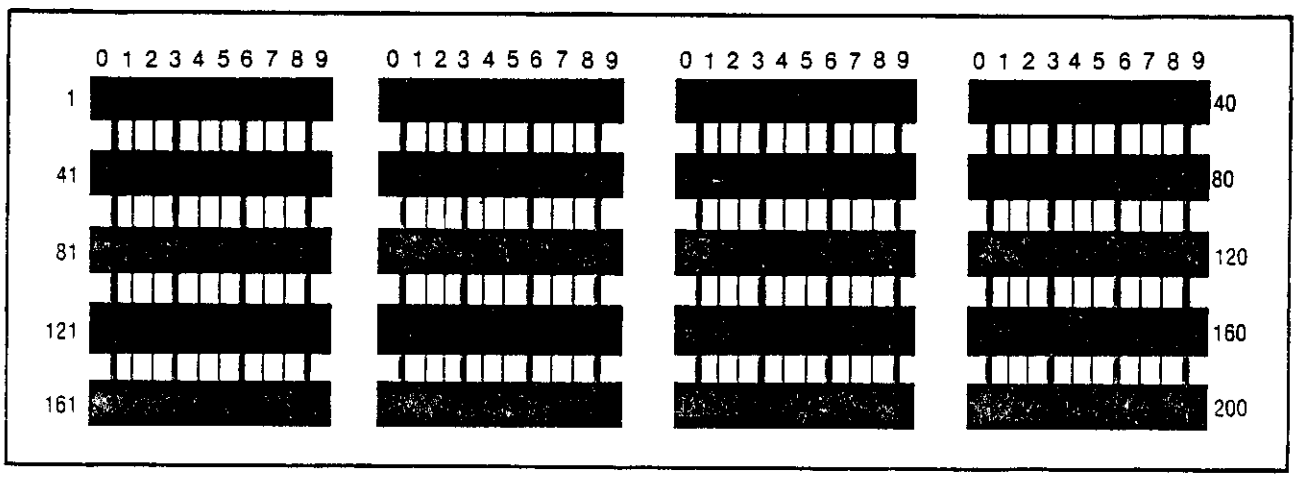

Fig. 206-2 Busy Lamp Position Numbering

PROGRAM EXTENSIONS
MAP210-206
Issue 2, February 1982
Sheet 8 of 8

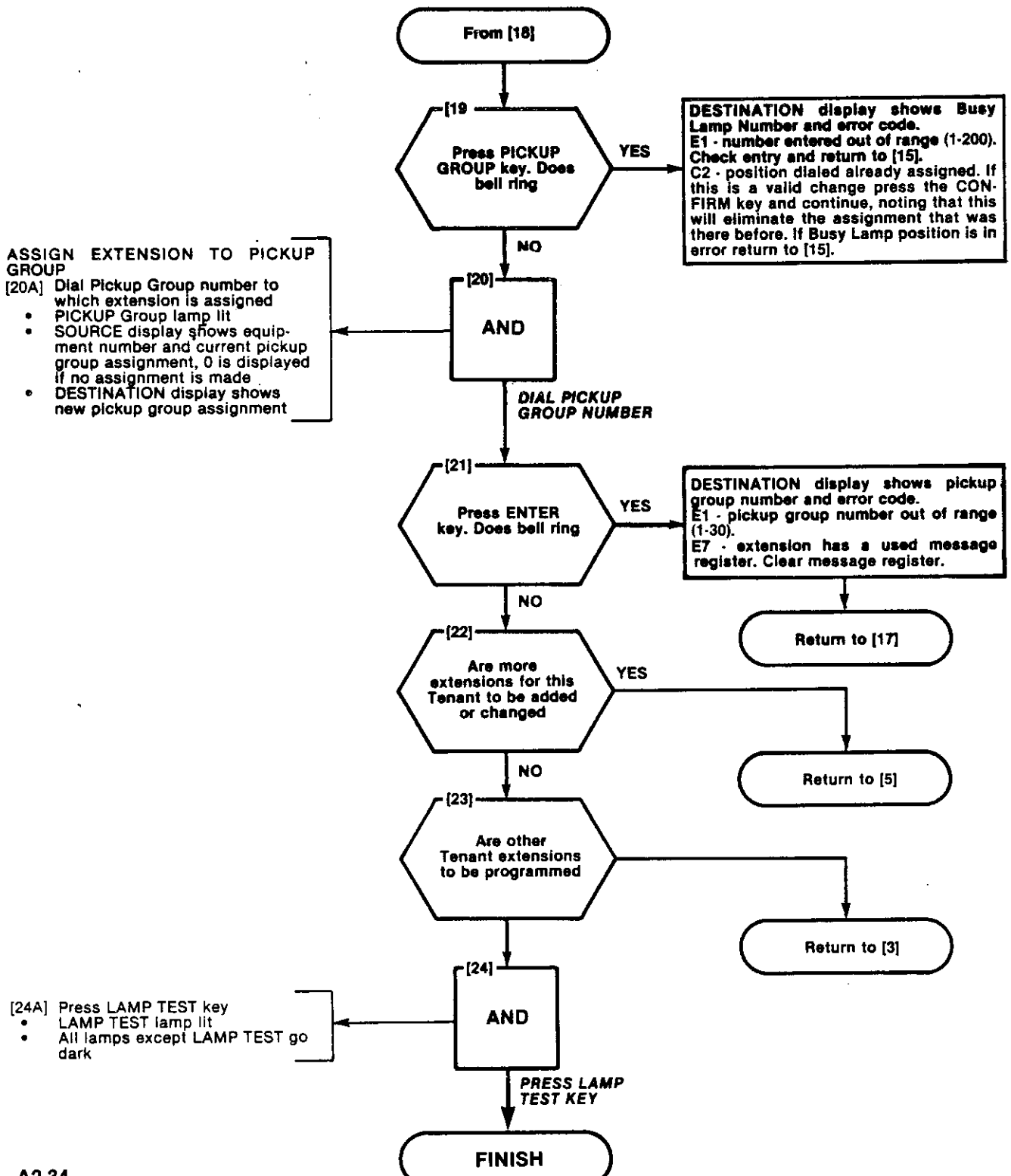

PROGRAM EXTENSION HUNT GROUPS
MAP210-207
Issue 2, February 1982
Sheet 1 of 6

NOTES

(1) All entries are made from the console dial pad.
(2) HUNT GROUP lamp remains lit throughout procedure.
(3) A display of E0 indicates that an incorrect key has been pressed. Press the key specified in the MAP.
(4) If any equipment number is to be changed within a hunt group, the hunt group must be re-entered.

SYNOPSIS

Select required tenant.
Enter hunt group number (1-12).
Enter master hunt number.
Enter all required equipment numbers.
Determine type of hunting
Press ENTER key.

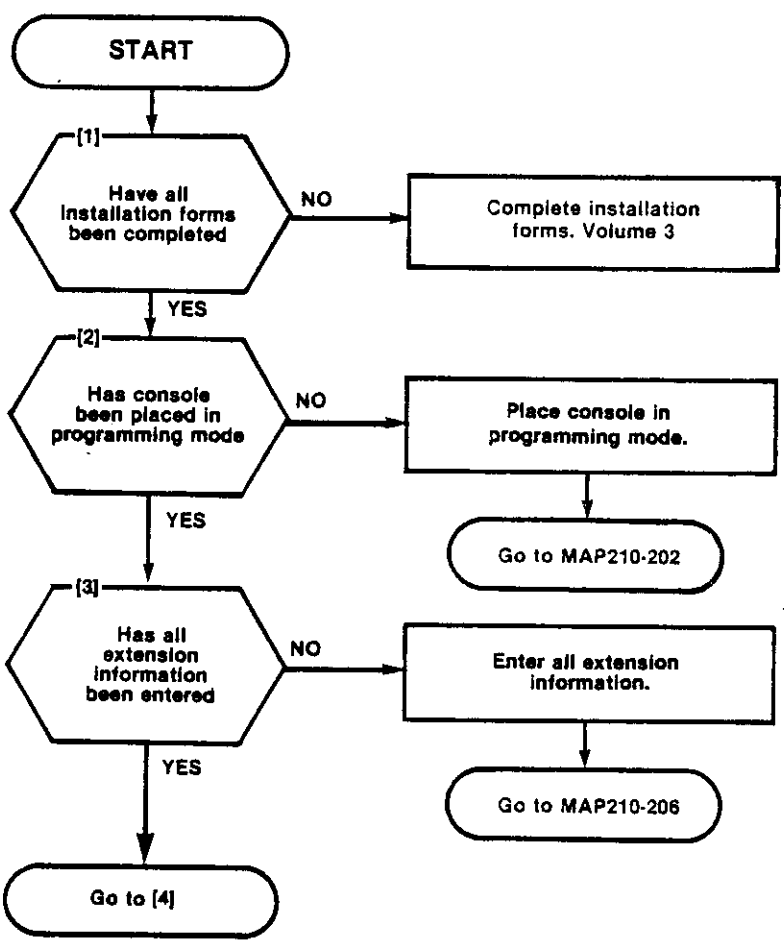

PROGRAM EXTENSION HUNT GROUPS
MAP210-207
Issue 2. February 1982
Sheet 2 of 6

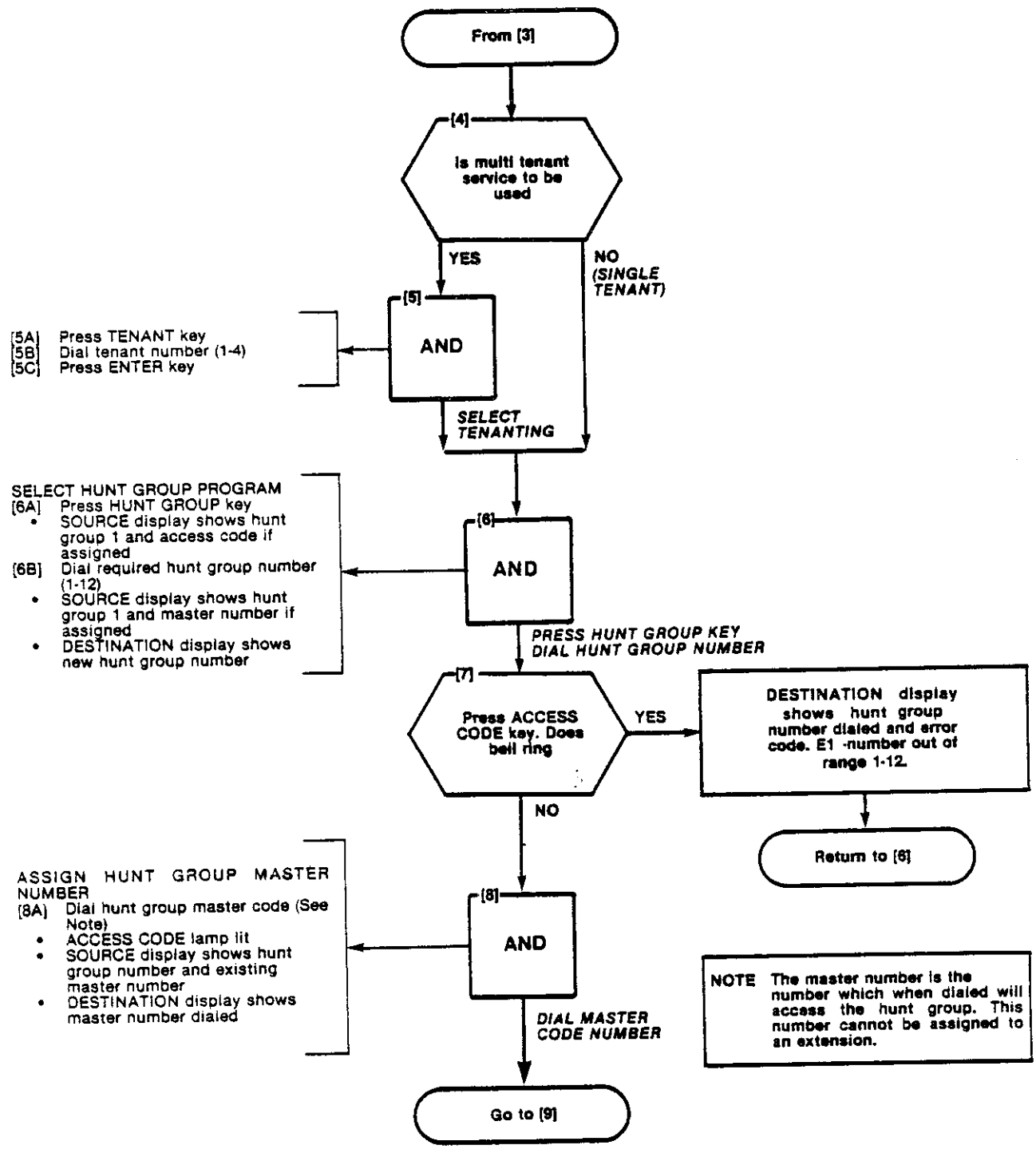

PROGRAM EXTENSION HUNT GROUPS
MAP210-207
Issue 2, February 1982
Sheet 3 of 6

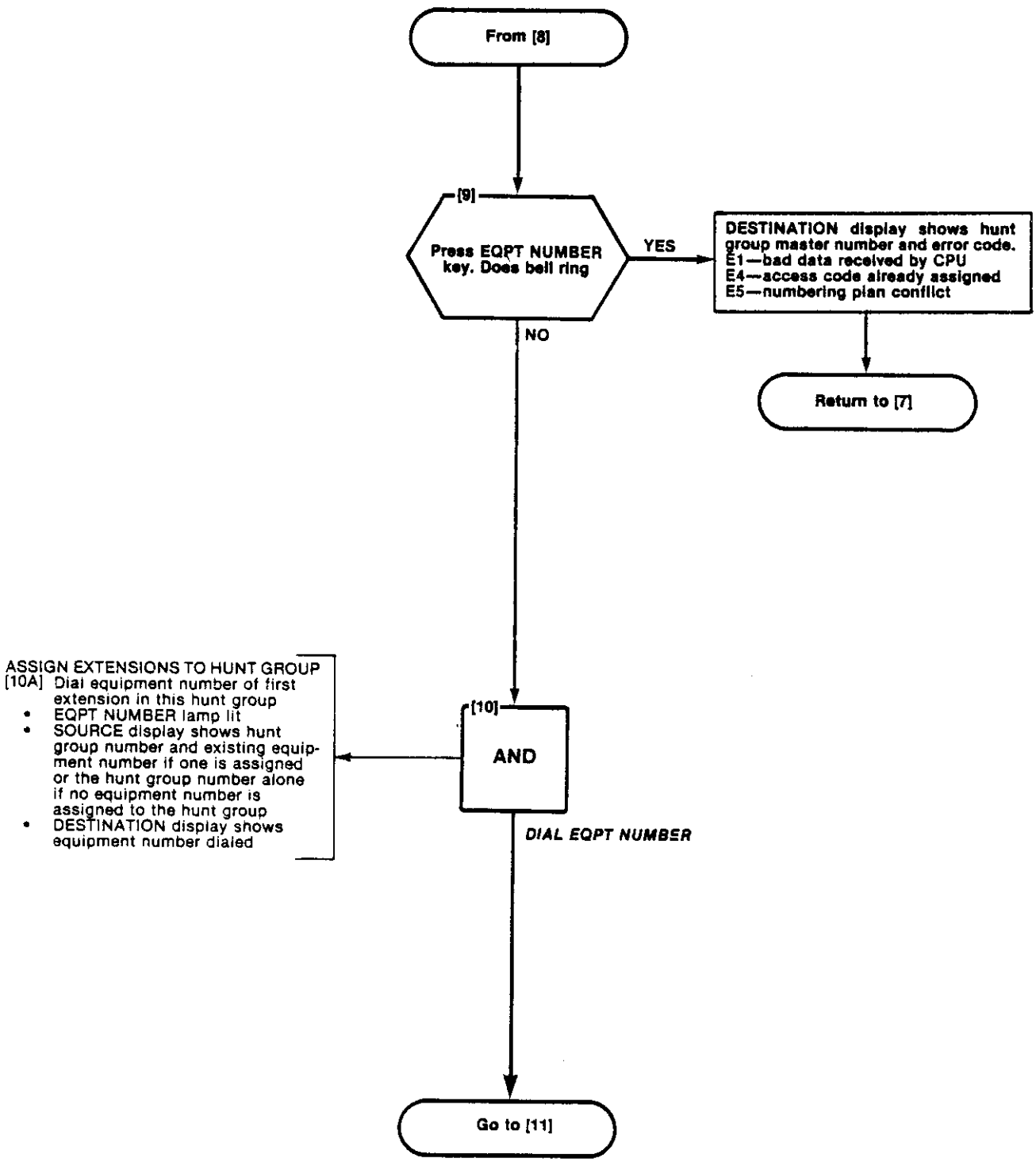

PROGRAM EXTENSION HUNT GROUPS
MAP210-207
Issue 2. February 1982
Sheet 4 of 6

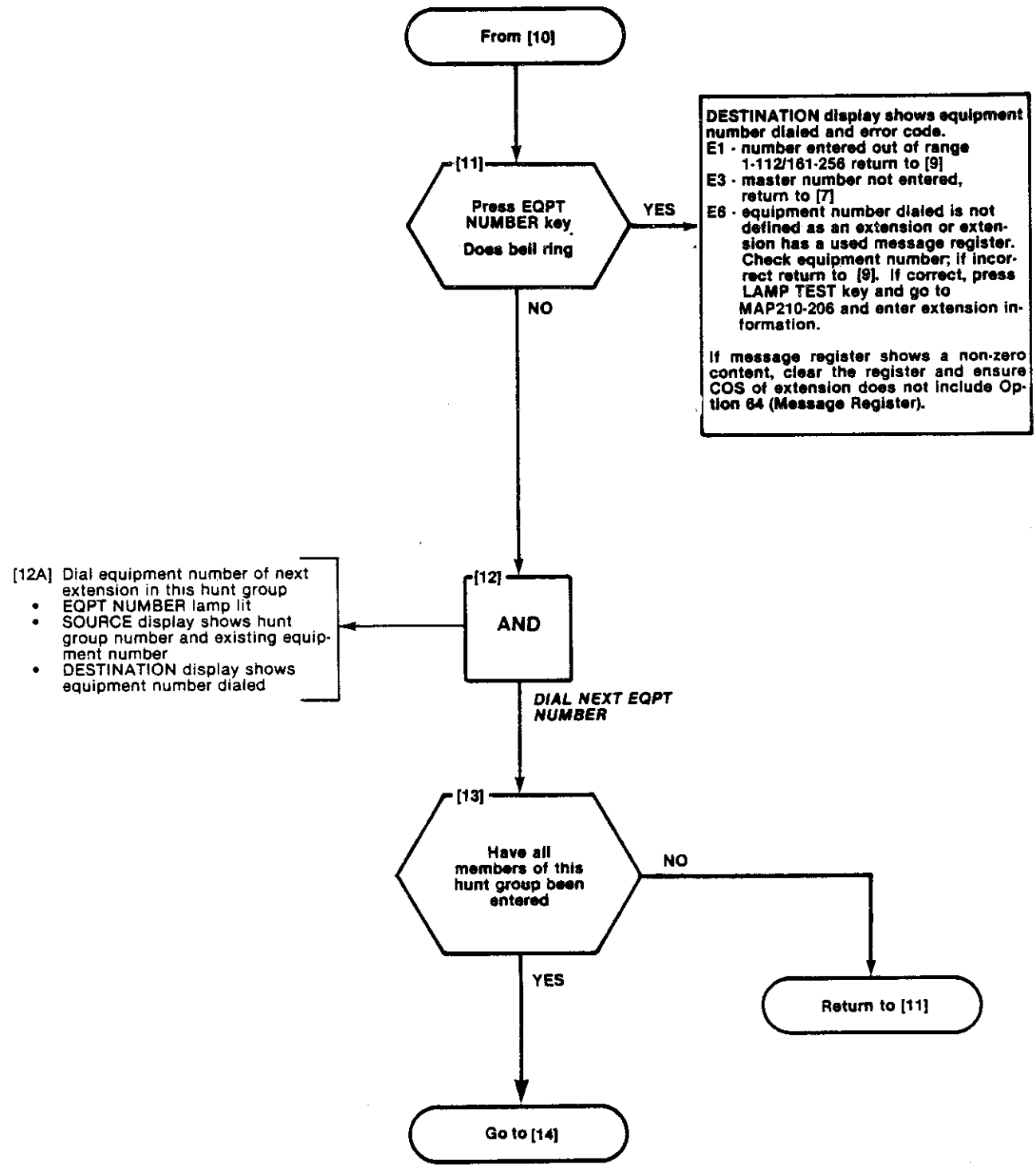

PROGRAM EXTENSION HUNT GROUPS
MAP210-207
Issue 2, February 1982
Sheet 5 of 6

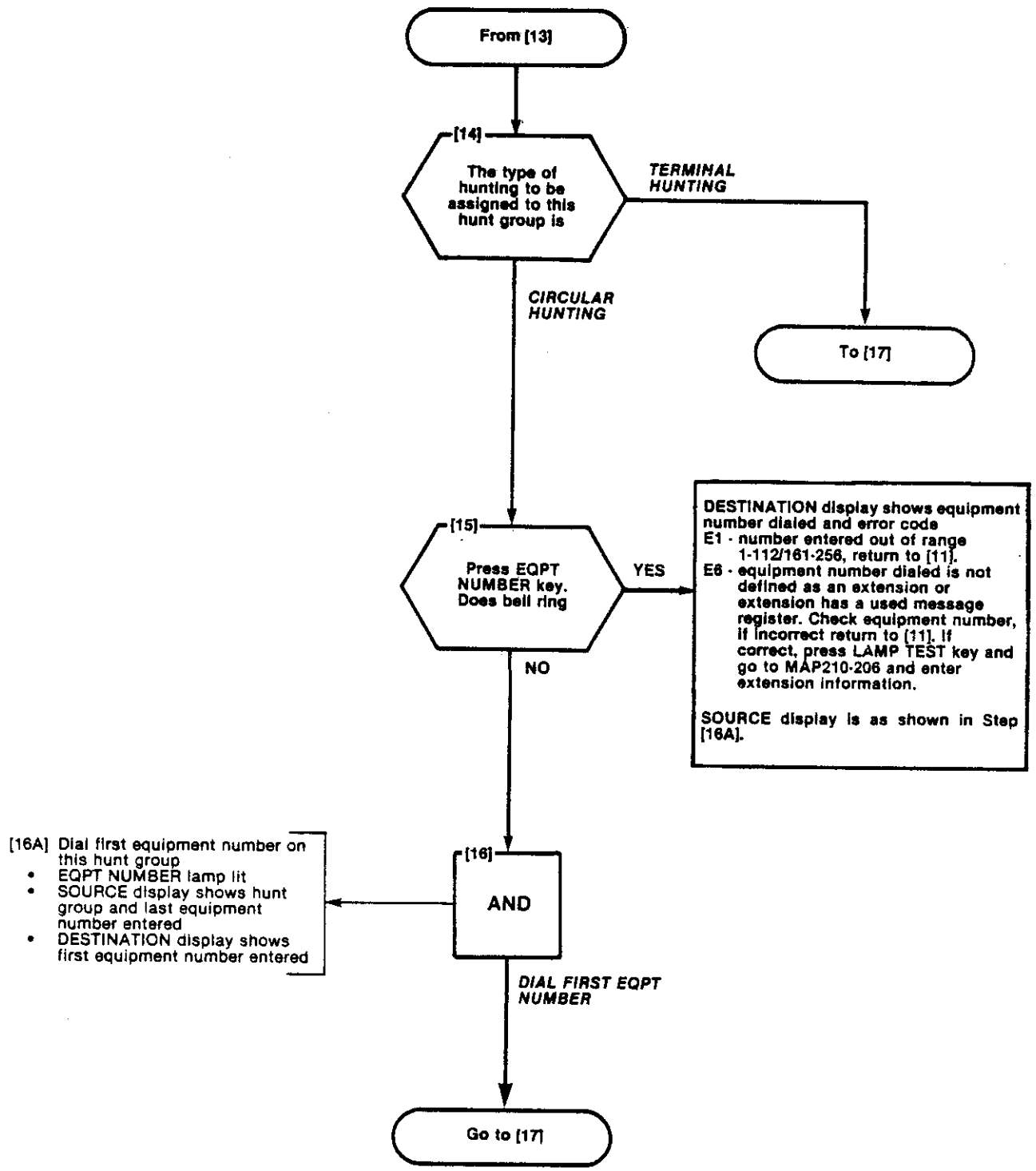

PROGRAM EXTENSION HUNT GROUPS
MAP210-207
Issue 2, February 1982
Sheet 6 of 6

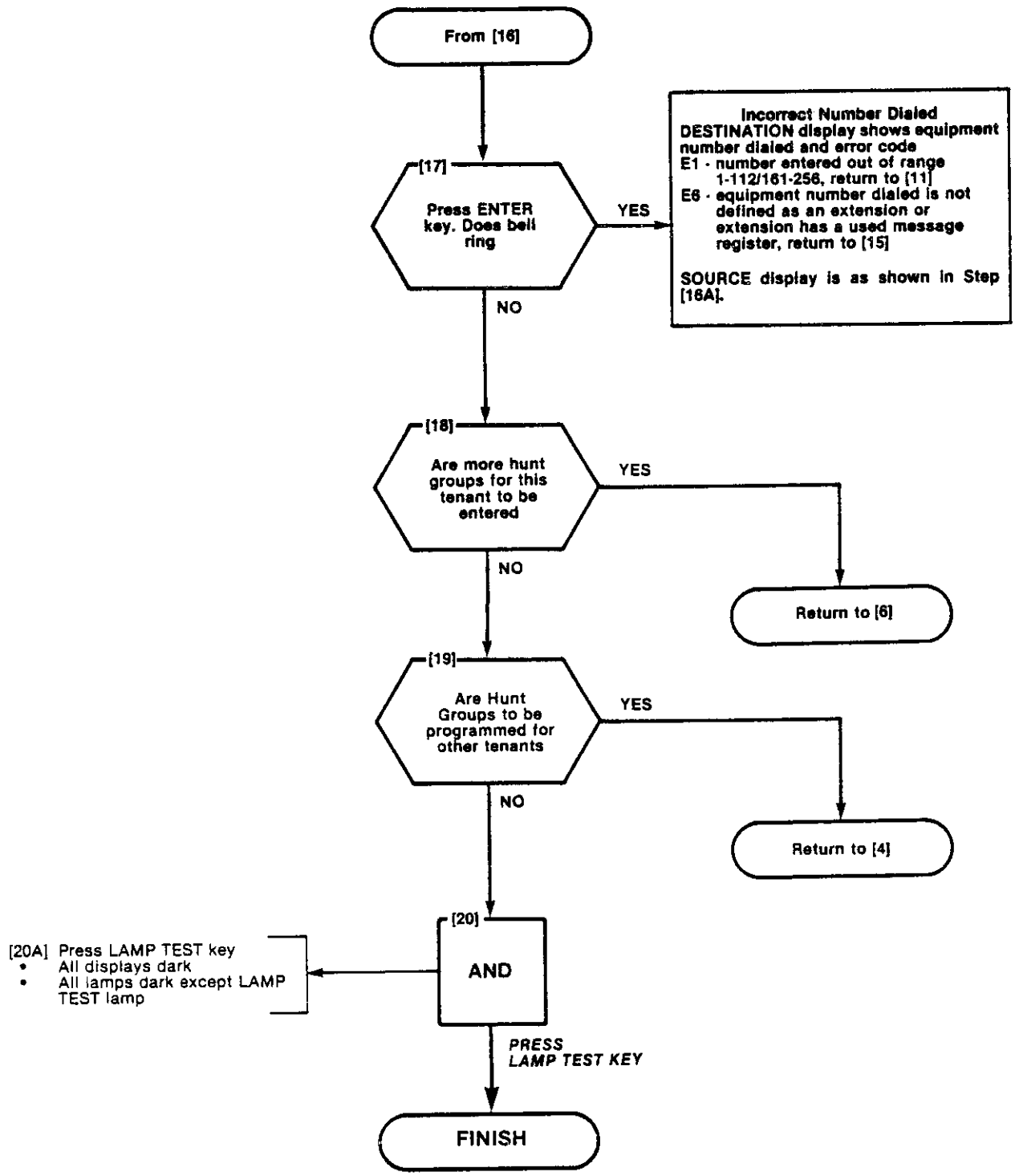

PROGRAM NON DIAL-IN TRUNKS
MAP210-208
Issue 2. February 1982
Issue 1 of 10

NOTES

(1) All entries are made from the console dial pad
(2) TRUNK lamp remains lit throughout procedure
(3) A display of E0 indicates that an incorrect key was pressed. Press the key specified in MAP and proceed.

SYNOPSIS

Select tenant service if required
Enter equipment number (10-112/162-256)
Enter Trunk type number (1 or 5, 11 or 51)
Enter LDN assignment
Enter DAY assignment
Enter NIGHT 1 assignment
Enter NIGHT 2 assignment
Enter Busy Lamp Position number
Press ENTER key

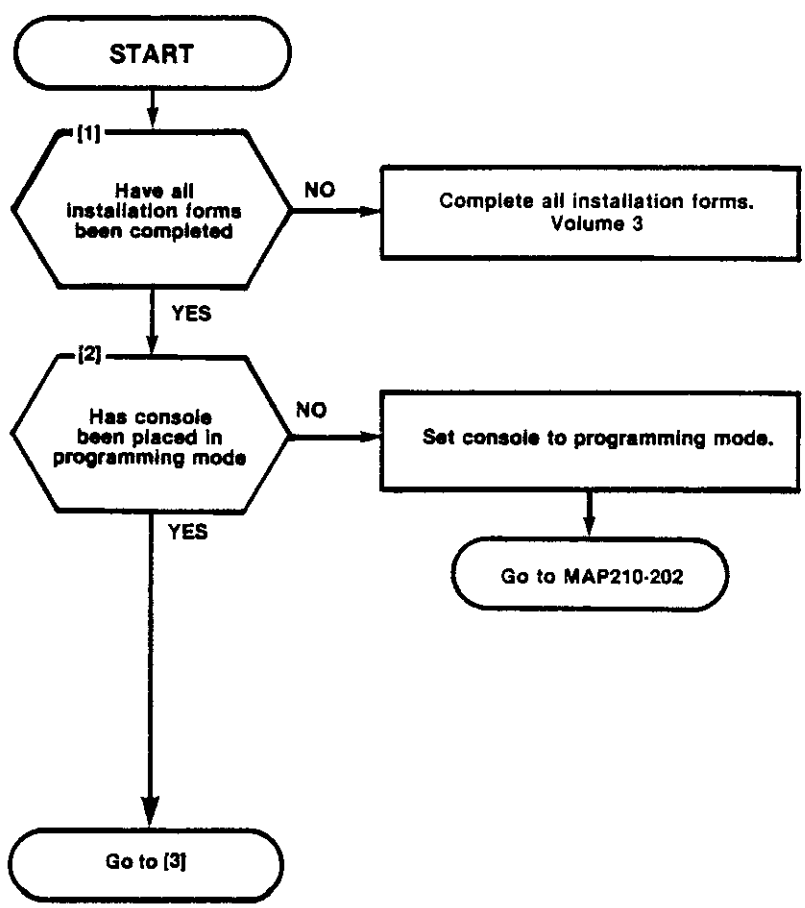

PROGRAM NON DIAL-IN TRUNKS
MAP210-208
Issue 2, February 1982
Issue 2 of 10

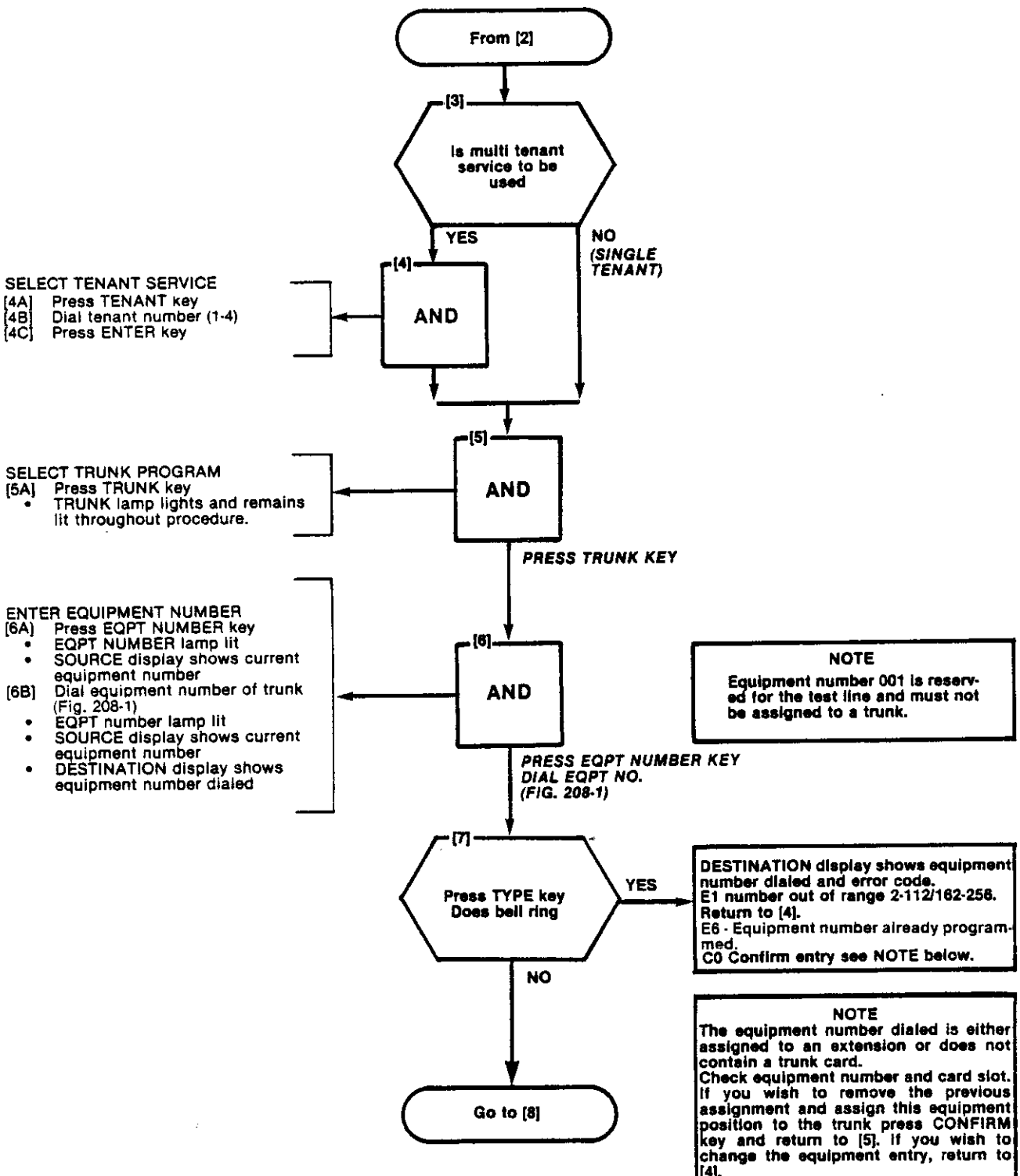

PROGRAM NON DIAL-IN TRUNKS
MAP210-208
Issue 2. February 1982
Issue 3 of 10

HARDWARE POSITION NUMBER	PLUG 7	PLUG 9	PLUG 11		EXTENSION UNIT NO.	TRUNK UNIT NO. (4 TRUNK)	TRUNK UNIT NO. (2 TRUNK)
	161 169 177 185 193 201	209 217 225 233 241 249			1		
	162 170 178 186 194 202	210 218 226 234 242 250			2	1	1
	163 171 179 187 195 203	211 219 227 235 243 251			3		
	164 172 180 188 196 204	212 220 228 236 244 252			4	2	
	165 173 181 189 197 205	213 221 229 237 245 253			5		
	166 174 182 190 198 206	214 222 230 238 246 254			6	3	2
	167 175 183 191 199 207	215 223 231 239 247 255			7		
	168 176 184 192 200 208	216 224 232 240 248 256			8	4	
	1 2 3 4 5 6	7 8 9 10 11 12	13 14 15 16 17 18	19 20 21 22	CARD POSITION		
	31 32 33 34 35 36	37 38 39 40 41 42	43 44 45 46 47 48	49 50 51 52	SLOT NUMBER		
	PLUG 8	PLUG 10	PLUG 12				

SHELF 2 (SX-200 ONLY)

HARDWARE POSITION NUMBER	PLUG 1	PLUG 3	PLUG 5						EXTENSION UNIT NO.	TRUNK UNIT NO. (4 TRUNK)	TRUNK UNIT NO. (2 TRUNK)
	001 009 017 025 033 041	049 057 065 073 081 089	097 105	RECEIVER NO. 1	CONSOLE CONTROL CARD	CONSOLE CONTROL CARD	TONE CONTROL		1		
	002 010 018 026 034 042	050 058 066 074 082 090	098 106						2	1	1
	003 011 019 027 035 043	051 059 067 075 083 091	099 107					RESERVED	3		
	004 012 020 028 036 044	052 060 068 076 084 092	100 108					FOR	4	2	
	005 013 021 029 037 045	053 061 069 077 085 093	101 109					COMMON	5		
	006 014 022 030 038 046	054 062 070 078 086 094	102 110					CONTROLS	6	3	2
	007 015 023 031 039 047	055 063 071 079 087 095	103 111						7		
	008 016 024 032 040 048	056 064 072 080 088 096	104 112						8	4	
	1 2 3 4 5 6	7 8 9 10 11 12	13 14 15 16 17 18					19 20 21 22	CARD POSITION		
	1 2 3 4 5 6	7 8 9 10 11 12	13 14 15 16 17 18					19 20 21 22	SLOT NUMBER		
	PLUG 2	PLUG 4	PLUG 6								

642

SHELF 1

NOTES: 1. EQUIPMENT POSITION 001 IS RESERVED FOR THE TEST LINE AND MUST THEREFORE BE EQUIPPED WITH A LINE CARD.
2. TRUNK EQUIPMENT NUMBER IS SAME AS INDIVIDUAL TRUNK ACCESS CODE.

Fig. 208-1 Hardware/Equipment Numbering

PROGRAM NON DIAL-IN TRUNKS
MAP210-208
Issue 2, February 1982
Issue 4 of 10

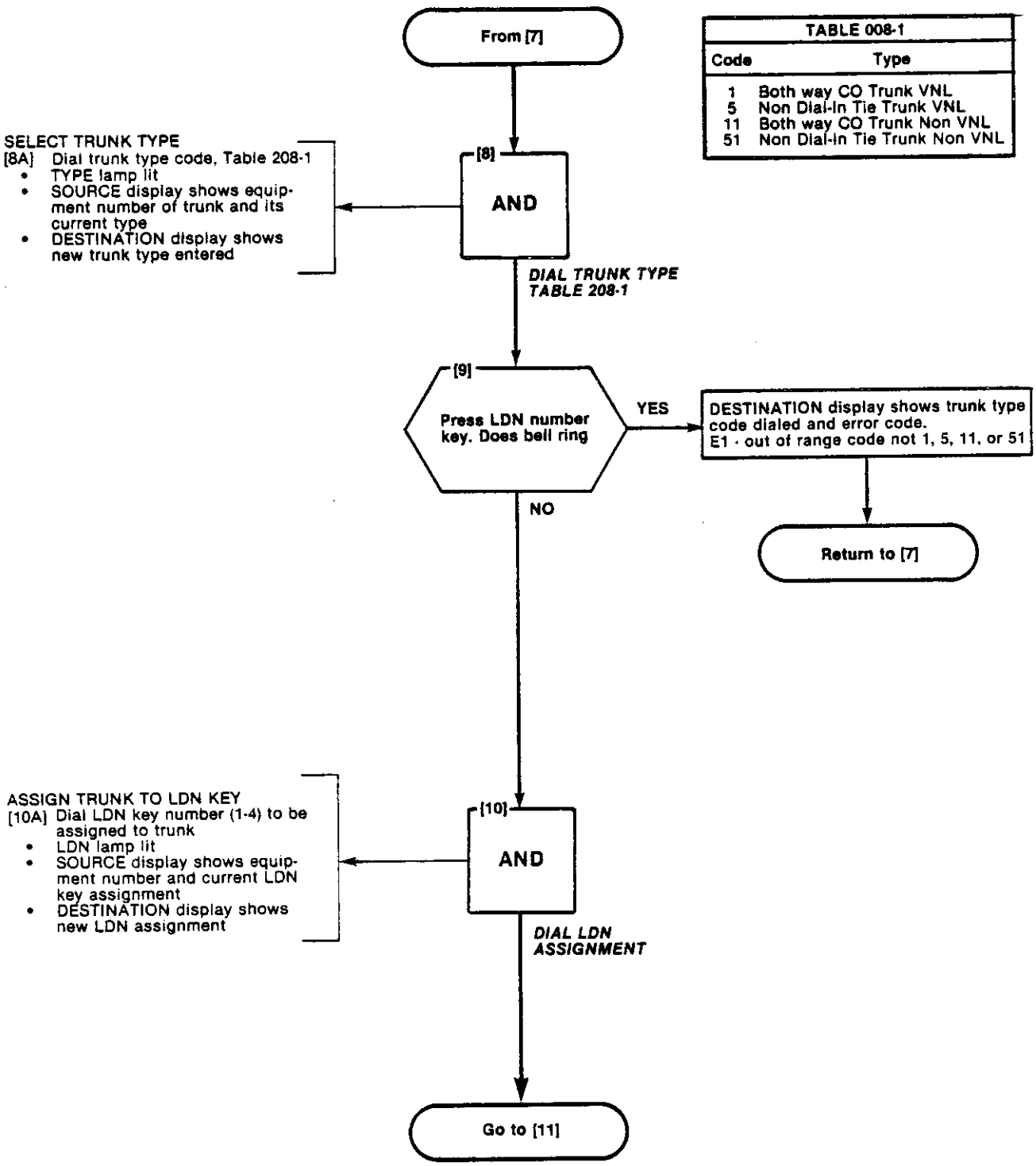

PROGRAM NON DIAL-IN TRUNKS
MAP210-208
Issue 2, February 1982
Issue 5 of 10

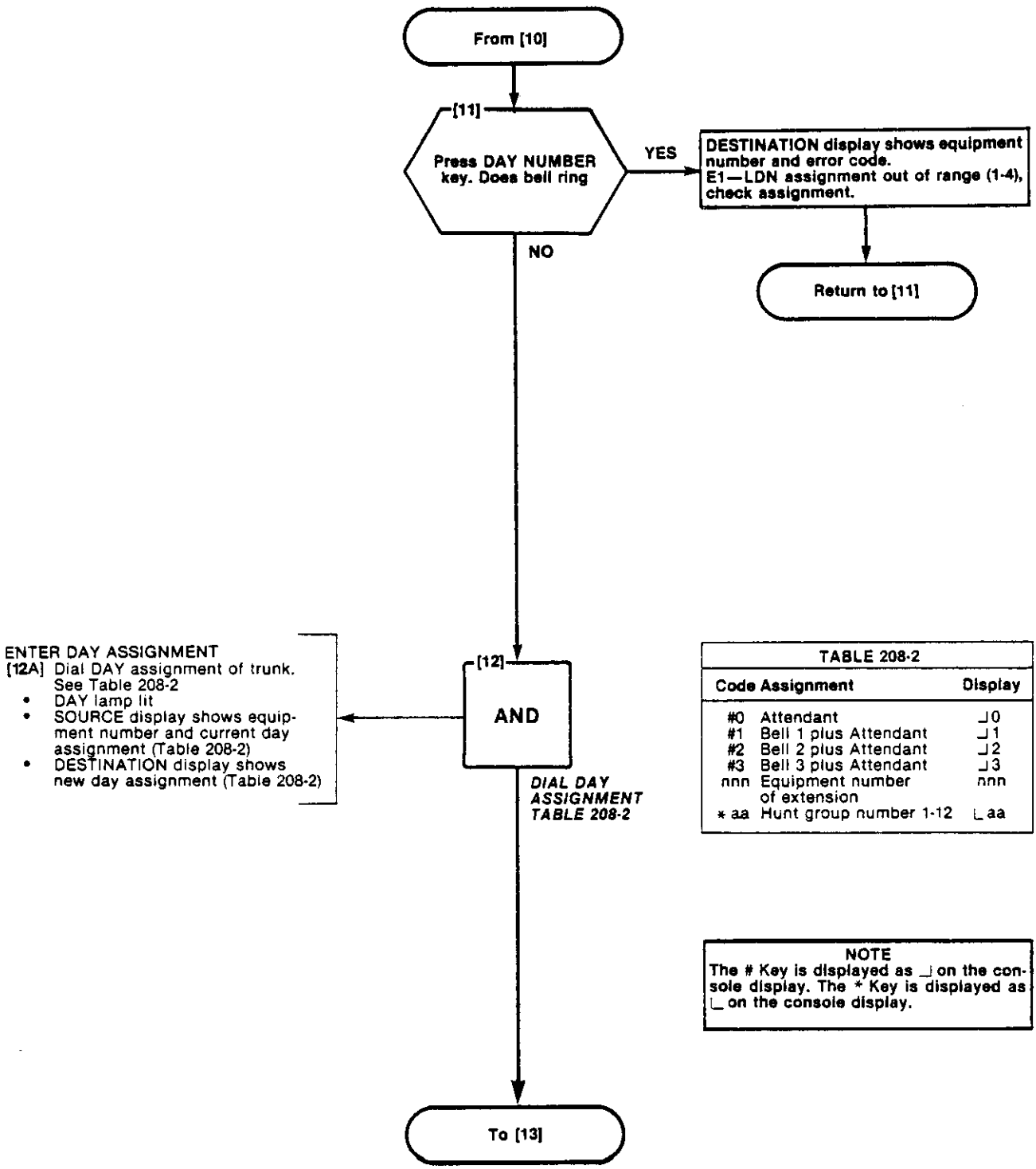

TABLE 208-2

Code	Assignment	Display
#0	Attendant	⌟0
#1	Bell 1 plus Attendant	⌟1
#2	Bell 2 plus Attendant	⌟2
#3	Bell 3 plus Attendant	⌟3
nnn	Equipment number of extension	nnn
* aa	Hunt group number 1-12	⌞aa

NOTE
The # Key is displayed as ⌟ on the console display. The * Key is displayed as ⌞ on the console display.

PROGRAM NON DIAL-IN TRUNKS
MAP210-208
Issue 2, February 1982
Sheet 6 of 10

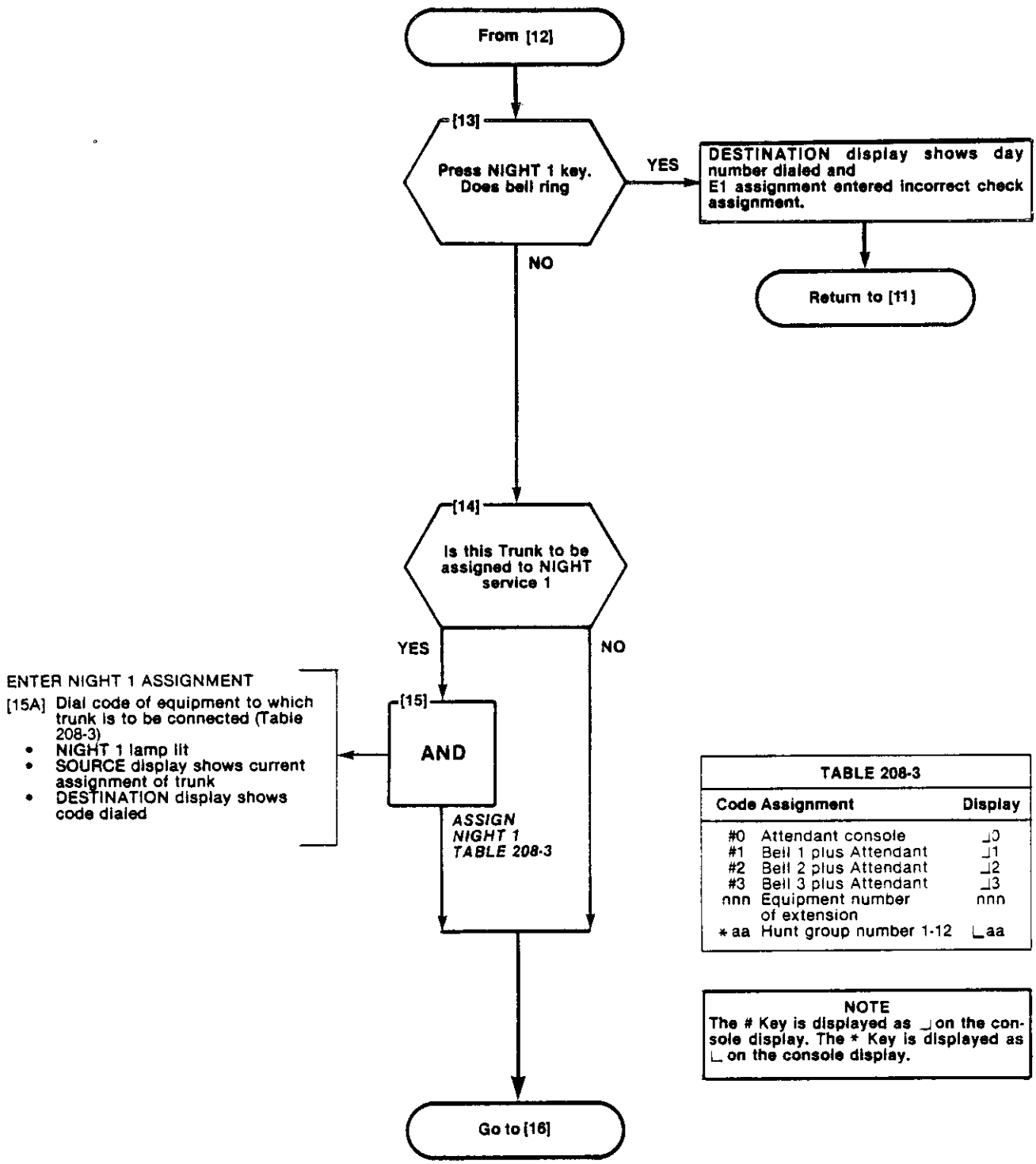

TABLE 208-3

Code Assignment		Display
#0	Attendant console	⌟0
#1	Bell 1 plus Attendant	⌟1
#2	Bell 2 plus Attendant	⌟2
#3	Bell 3 plus Attendant	⌟3
nnn	Equipment number of extension	nnn
*aa	Hunt group number 1-12	⌞aa

NOTE
The # Key is displayed as ⌟ on the console display. The * Key is displayed as ⌞ on the console display.

PROGRAM NON DIAL-IN TRUNKS
MAP210-208
Issue 2, February 1982
Sheet 7 of 10

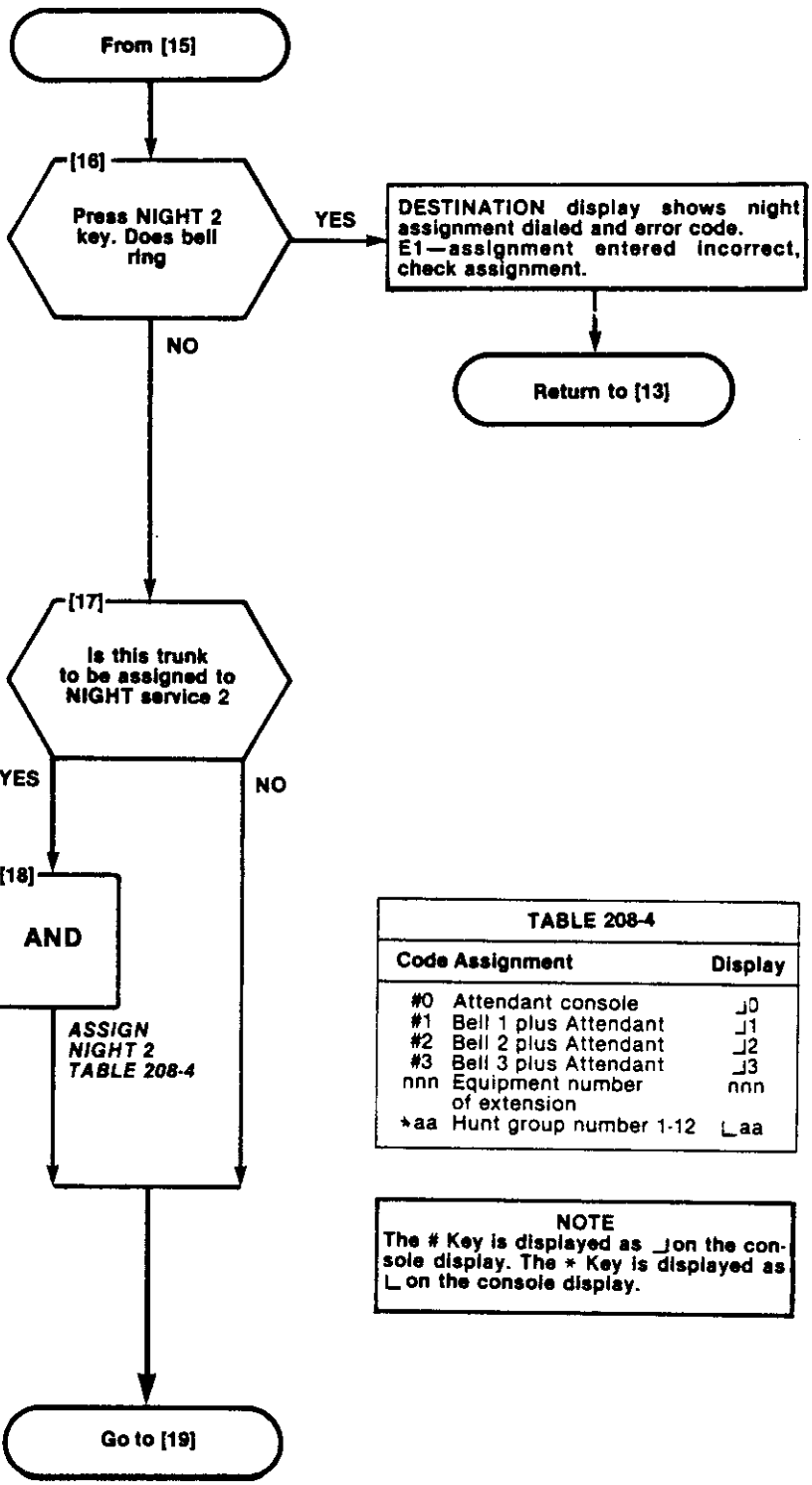

ENTER NIGHT 2 ASSIGNMENT

[18A] Dial code of equipment to which trunk is to be connected. Table 208-4

- NIGHT 2 lamp lit
- SOURCE display shows current assignment of trunk
- DESTINATION display shows code dialed

TABLE 208-4

Code Assignment		Display
#0	Attendant console	⌟0
#1	Bell 1 plus Attendant	⌟1
#2	Bell 2 plus Attendant	⌟2
#3	Bell 3 plus Attendant	⌟3
nnn	Equipment number of extension	nnn
*aa	Hunt group number 1-12	⌞aa

NOTE
The # Key is displayed as ⌟on the console display. The * Key is displayed as ⌞on the console display.

PROGRAM NON DIAL-IN TRUNKS
MAP210-208
Issue 2. February 1982
Sheet 8 of 10

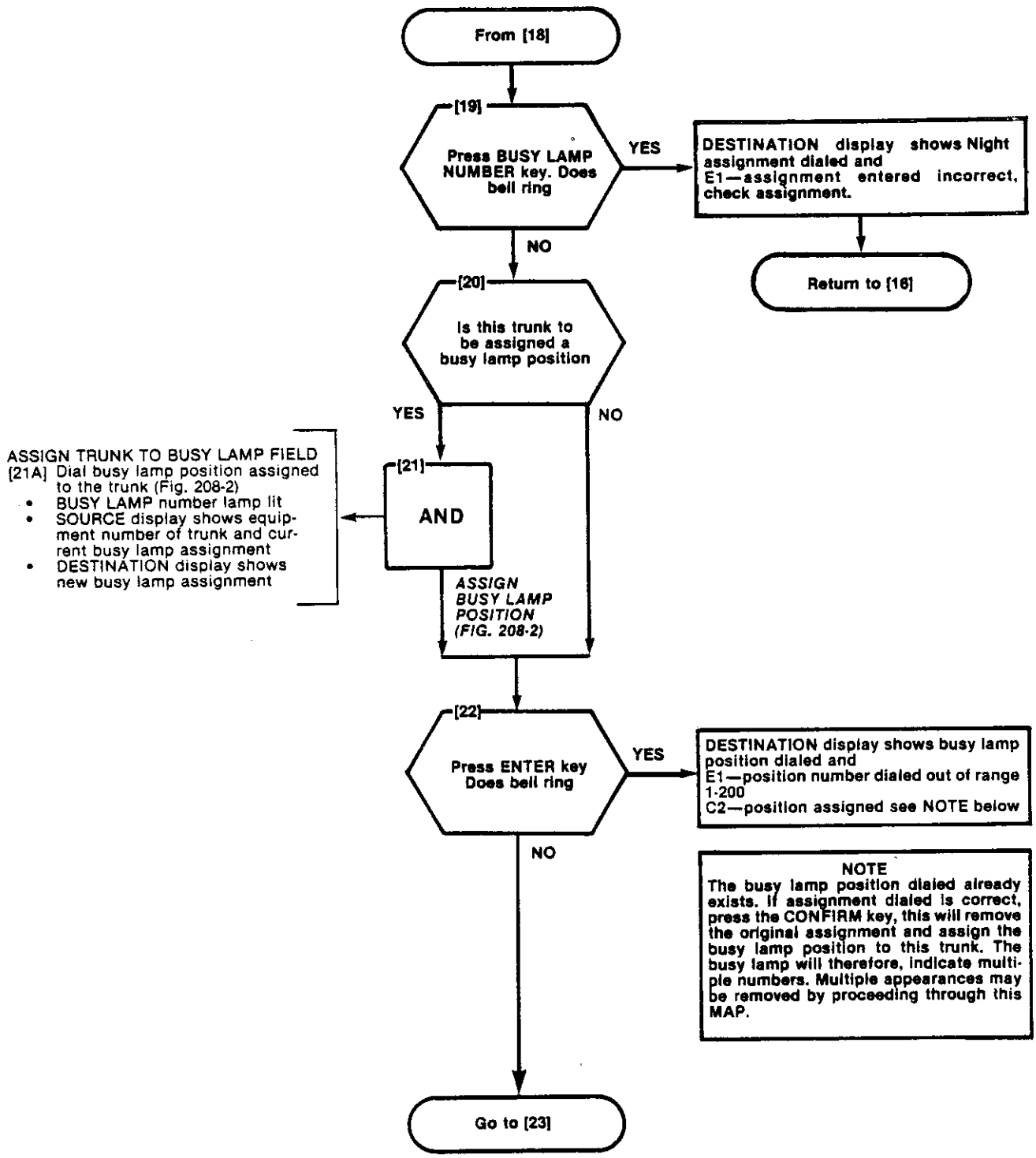

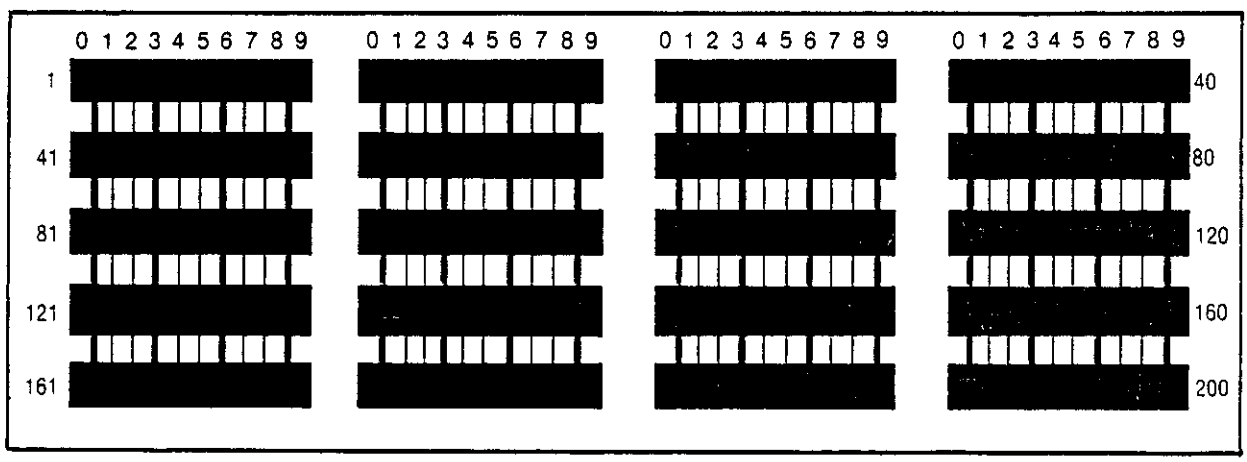

Fig. 208-2 Busy Lamp Position

PROGRAM NON DIAL-IN TRUNKS
MAP210-208
Issue 2, February 1982
Sheet 10 of 10

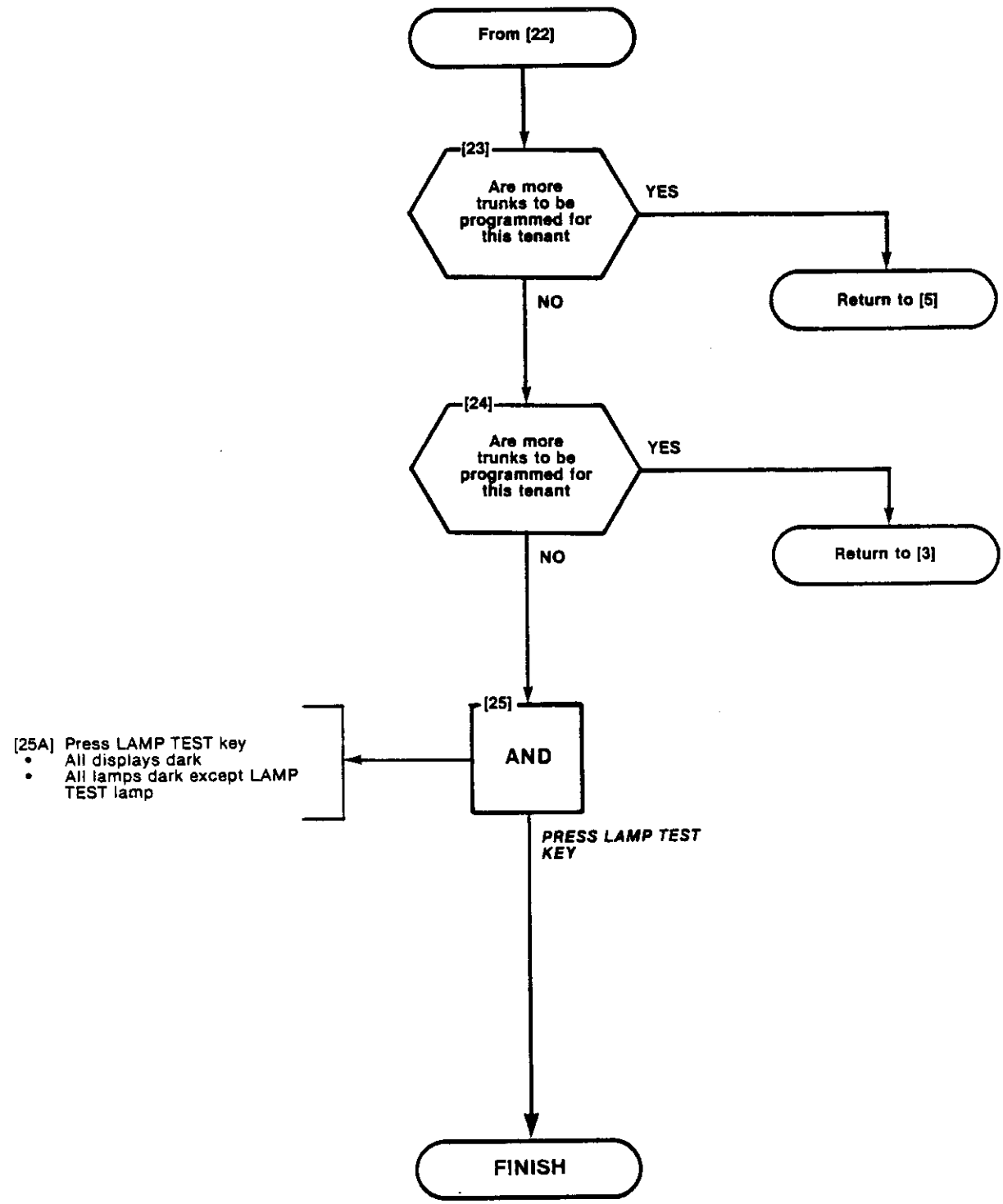

PROGRAM DIAL-IN TRUNKS
MAP210-209
Issue 2. February 1982
Sheet 1 of 8

NOTES

(1) All entries are made from the console dial pad
(2) TRUNK lamp remains lit throughout procedure
(3) A display of EO indicates that an incorrect key was pressed. Press the key specified in MAP and proceed.
(4) This flow chart applies to E&M, LOOP and DX Tie Trunks

SYNOPSIS

Select tenant service if required.
Press TRUNK key.
Enter Equipment number (10-112/162-256)
Enter Trunk type number 2 or 4, 21 or 41
Enter Trunk COS
Enter Toll Allow/Deny code
Enter Busy Lamp Position number
Press ENTER

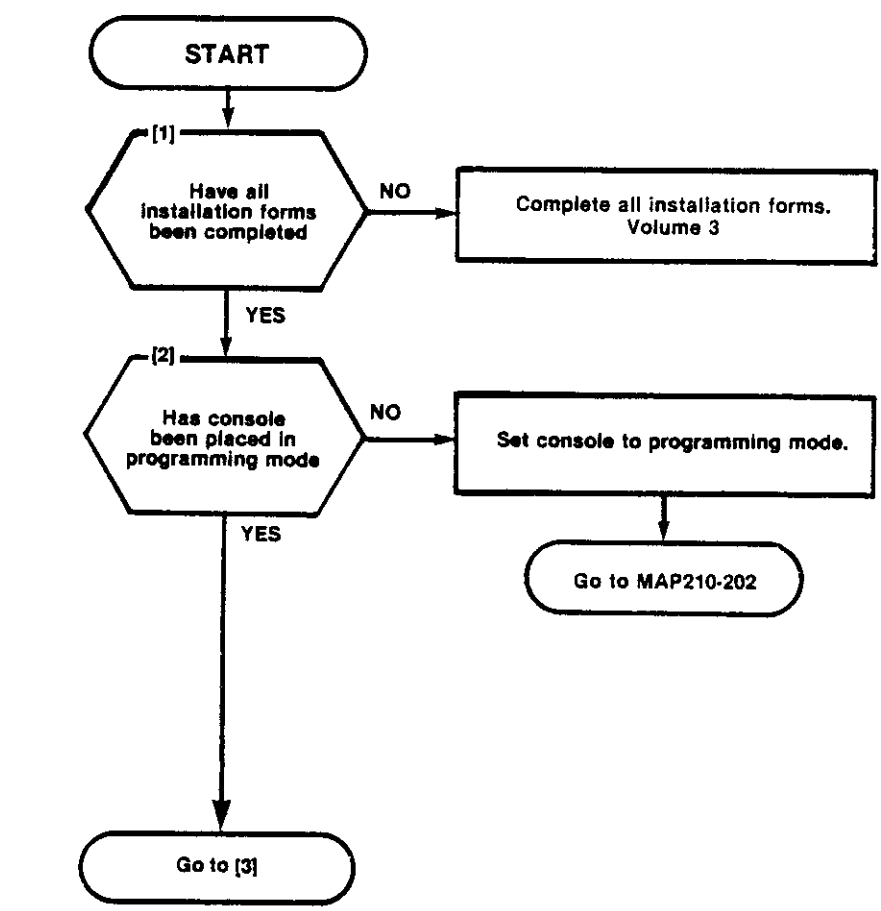

PROGRAM DIAL-IN TRUNKS
MAP210-209
Issue 2, February 1982
Sheet 2 of 8

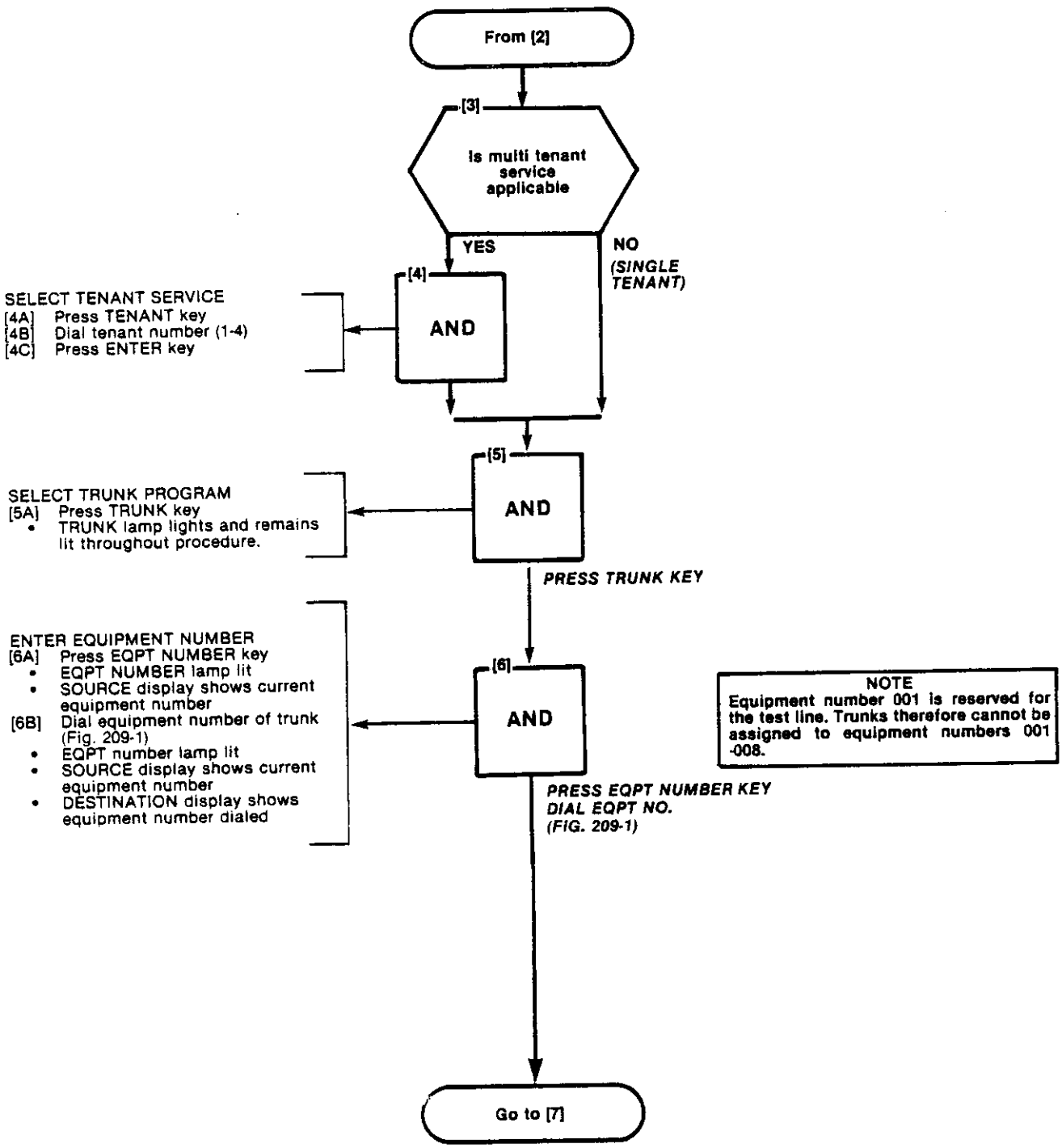

PROGRAM DIAL-IN TRUNKS
MAP210-209
Issue 2, February 1982
Sheet 3 of 8

HARDWARE POSITION NUMBER	PLUG 7						PLUG 9						PLUG 11									EXTENSION UNIT NO.	TRUNK UNIT NO. (4 TRUNK)	TRUNK UNIT NO. (2 TRUNK)
	161	169	177	185	193	201	209	217	225	233	241	249										1		
	162	170	178	186	194	202	210	218	226	234	242	250										2	1	1
	163	171	179	187	195	203	211	219	227	235	243	251										3		
	164	172	180	188	196	204	212	220	228	236	244	252										4	2	
	165	173	181	189	197	205	213	221	229	237	245	253										5		
	166	174	182	190	198	206	214	222	230	238	246	254										6	3	2
	167	175	183	191	199	207	215	223	231	239	247	255										7		
	168	176	184	192	200	208	216	224	232	240	248	256										8	4	
	1	2	3	4	5	6	7	8	9	10	11	12	13	14	15	16	17	18	19	20	21	22	CARD POSITION	
	31	32	33	34	35	36	37	38	39	40	41	42	43	44	45	46	47	48	49	50	51	52	SLOT NUMBER	
	PLUG 8						PLUG 10						PLUG 12											

SHELF 2 (SX-200 ONLY)

HARDWARE POSITION NUMBER	PLUG 1						PLUG 3						PLUG 5										EXTENSION UNIT NO.	TRUNK UNIT NO. (4 TRUNK)	TRUNK UNIT NO. (2 TRUNK)
	001	009	017	025	033	041	049	057	065	073	081	089	097	105	RECEIVER NO. 1	CONSOLE CONTROL CARD	CONSOLE CONTROL CARD	TONE CONTROL					1		
	002	010	018	026	034	042	050	058	066	074	082	090	098	106									2	1	1
	003	011	019	027	035	043	051	059	067	075	083	091	099	107					RESERVED				3		
	004	012	020	028	036	044	052	060	068	076	084	092	100	108					FOR				4	2	
	005	013	021	029	037	045	053	061	069	077	085	093	101	109					COMMON				5		
	006	014	022	030	038	046	054	062	070	078	086	094	102	110					CONTROLS				6	3	2
	007	015	023	031	039	047	055	063	071	079	087	095	103	111									7		
	008	016	024	032	040	048	056	064	072	080	088	096	104	112									8	4	
	1	2	3	4	5	6	7	8	9	10	11	12	13	14	15	16	17	18	19	20	21	22	CARD POSITION		
	1	2	3	4	5	6	7	8	9	10	11	12	13	14	15	16	17	18	19	20	21	22	SLOT NUMBER		
	PLUG 2						PLUG 4						PLUG 6												

642

SHELF 1

NOTES: 1. EQUIPMENT POSITION 001 IS RESERVED FOR THE TEST LINE AND MUST THEREFORE BE EQUIPPED WITH A LINE CARD.
2. TRUNK EQUIPMENT NUMBER IS SAME AS INDIVIDUAL TRUNK ACCESS CODE.

Fig. 209-1 Hardware/Equipment Numbering

PROGRAM NEW DIAL-IN TRUNKS
MAP210-209
Issue 2, February 1982
Sheet 4 of 8

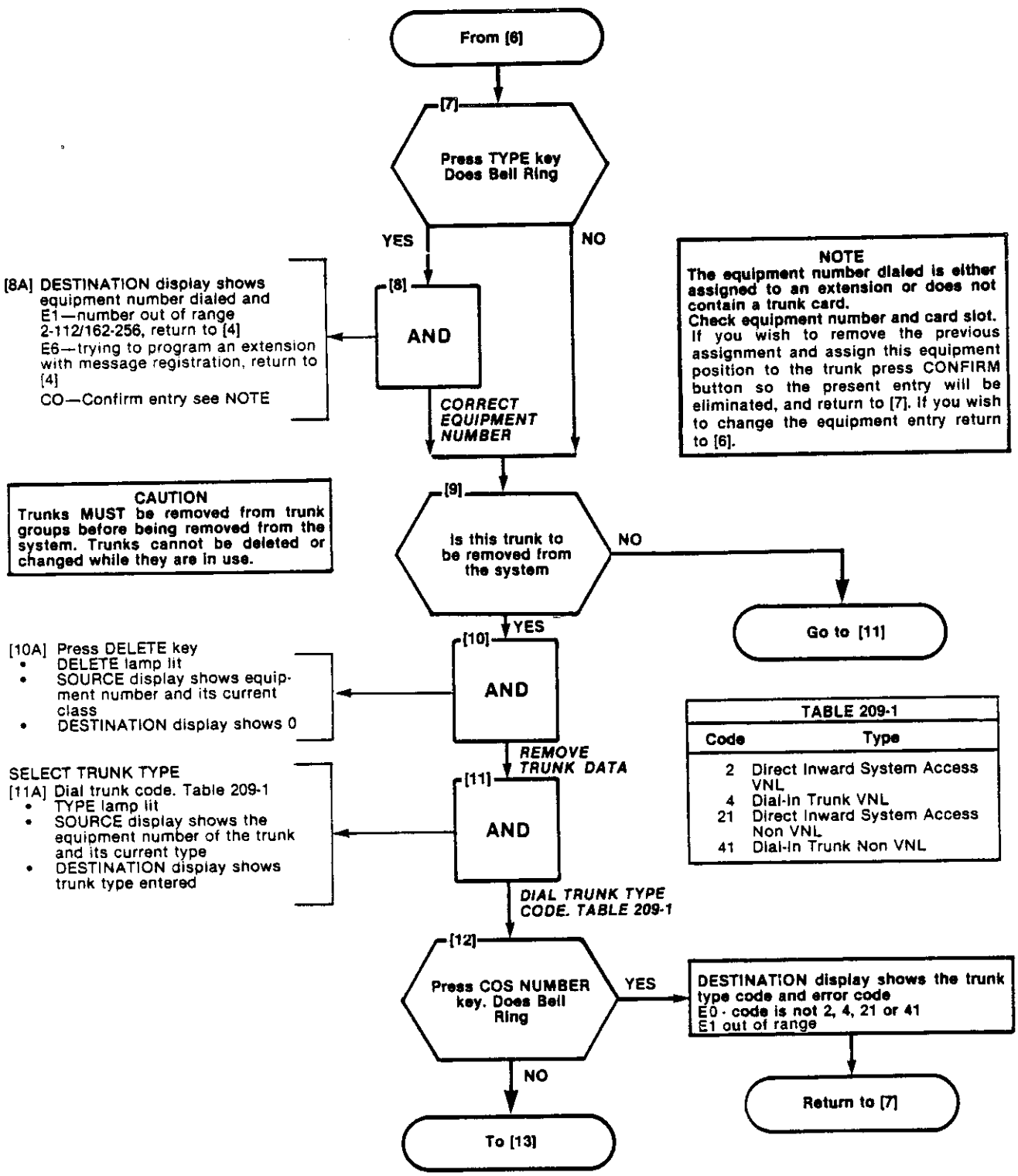

PROGRAM DIAL-IN TRUNKS
MAP210-209
Issue 2, February 1982
Sheet 5 of 8

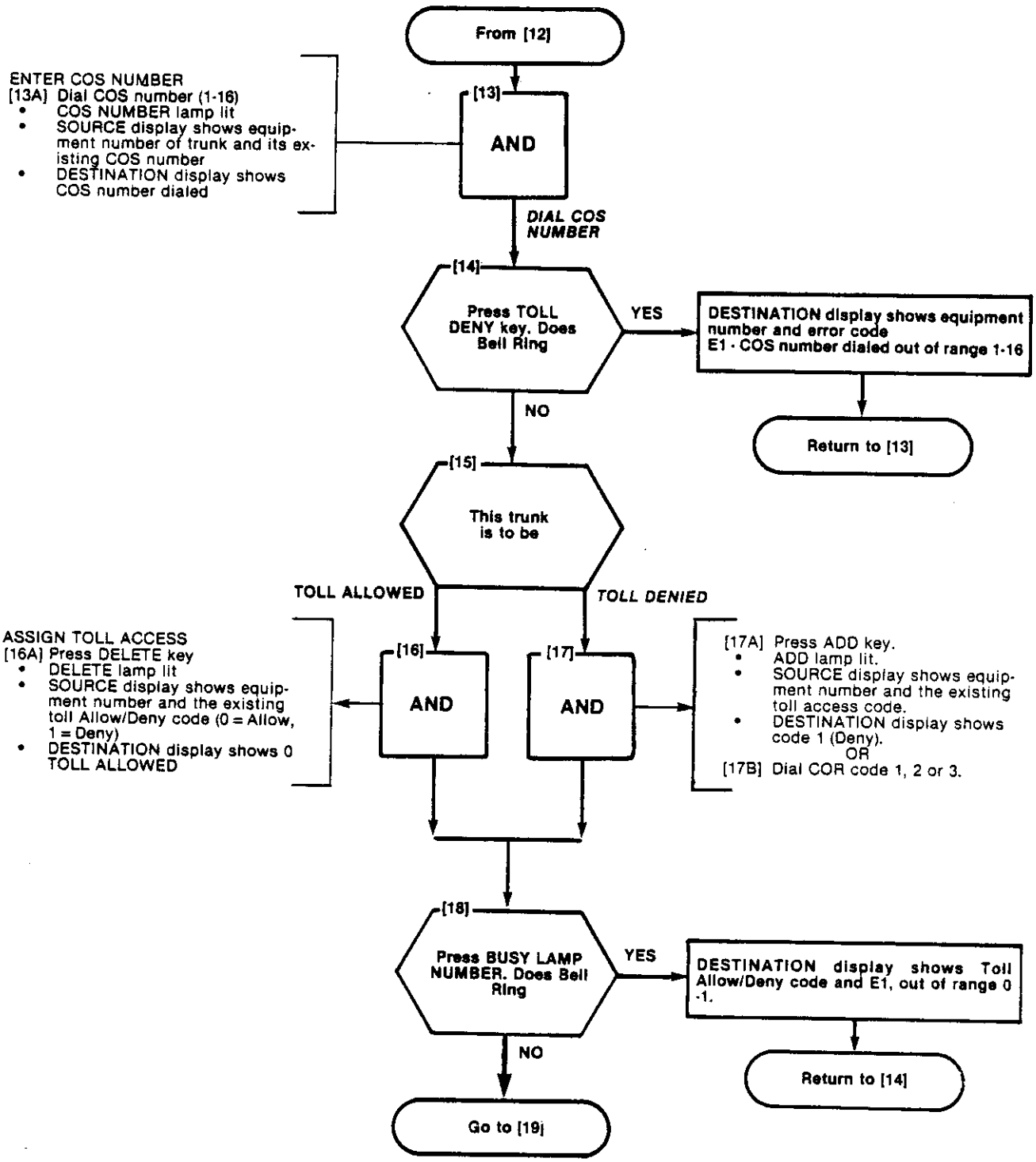

PROGRAM DIAL-IN TRUNKS
MAP210-209
Issue 2. February 1982
Sheet 6 of 8

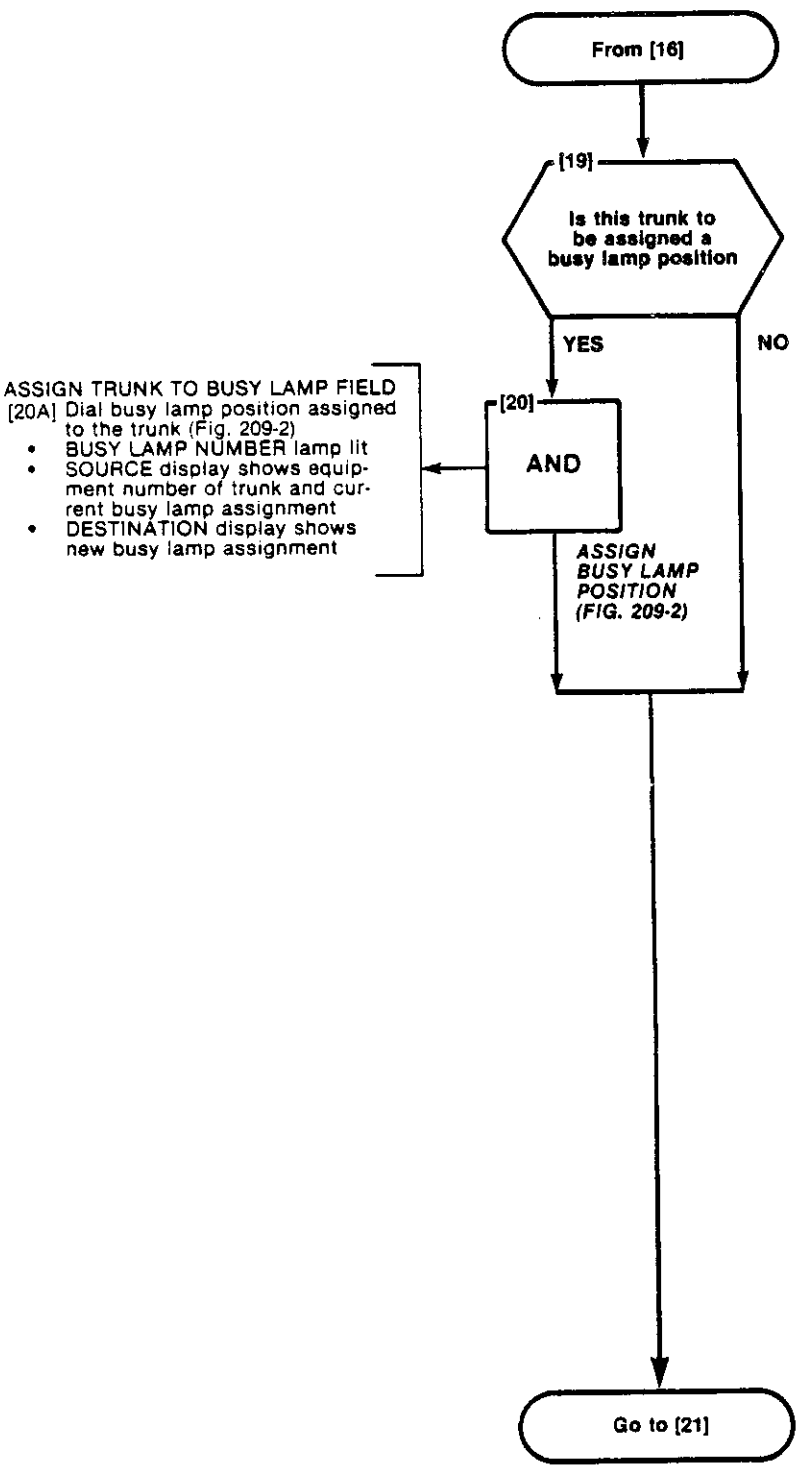

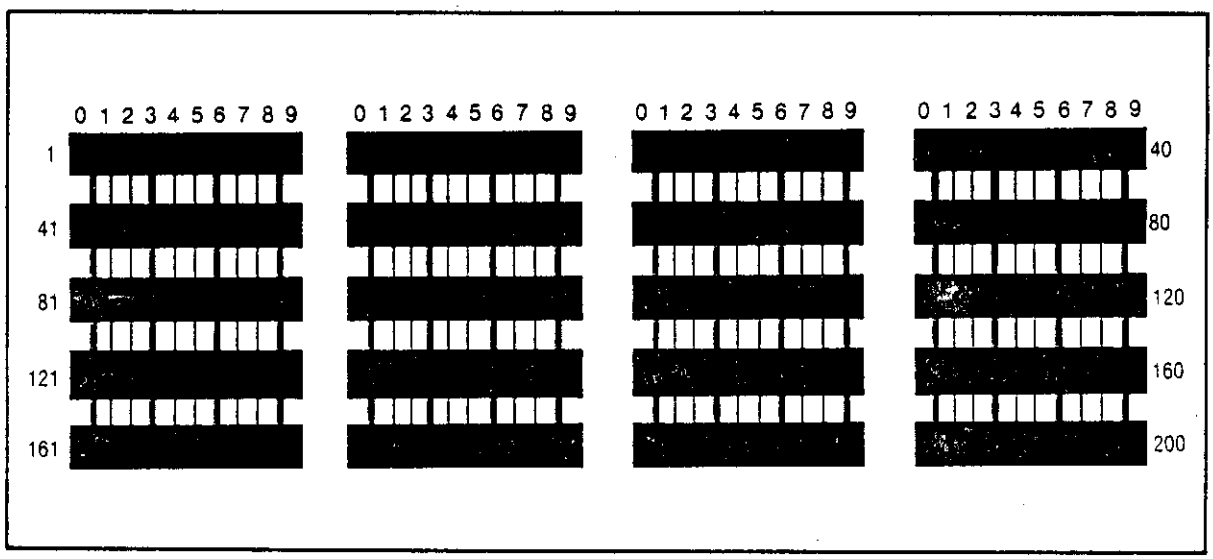

Fig. 209-2 Busy Lamp Position Numbering

PROGRAM DIAL-IN TRUNKS
MAP210-209
Issue 2, February 1982
Sheet 8 of 8

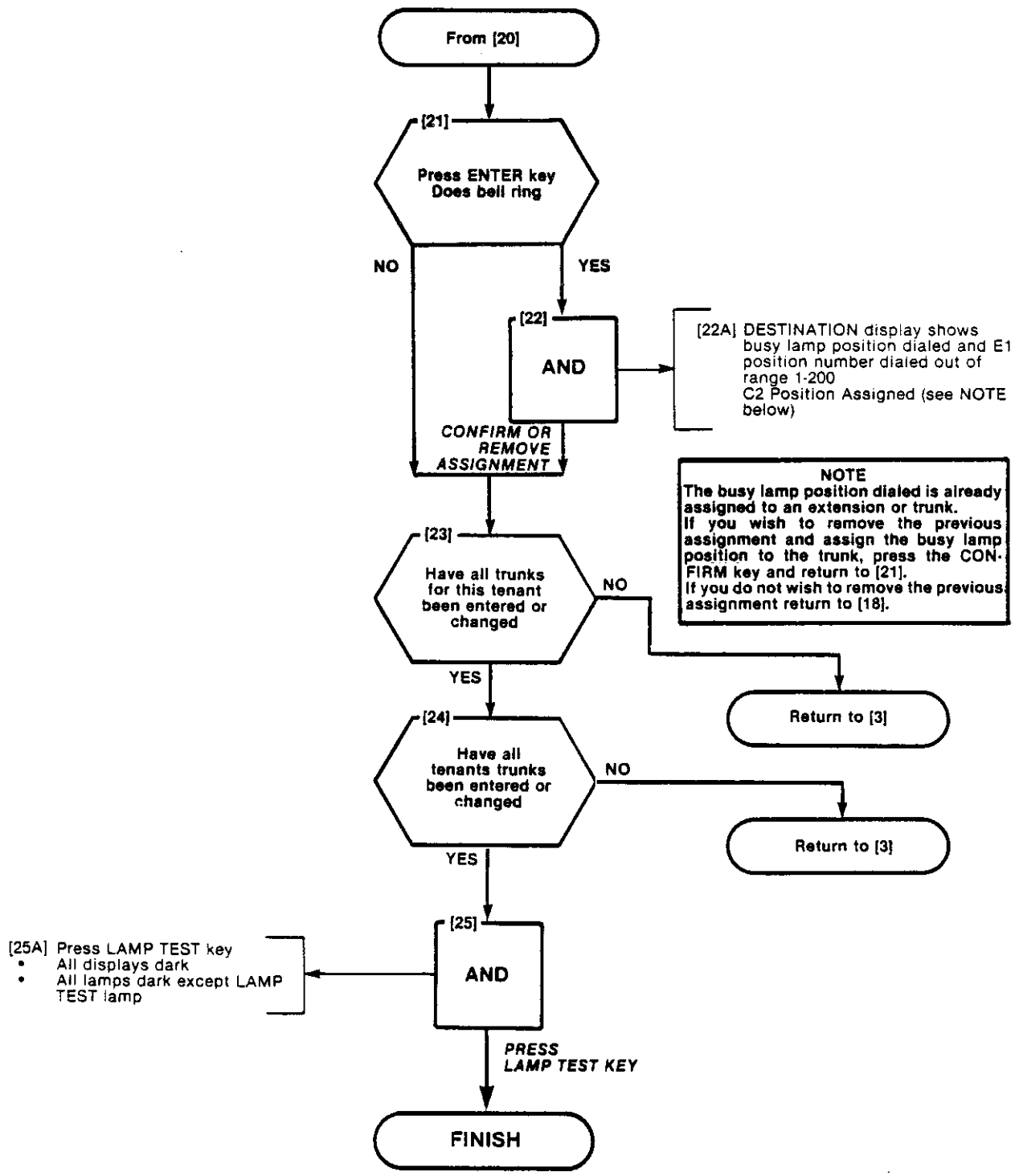

PROGRAM DID TRUNKS
MAP210-210
Issue 2, February 1982
Sheet 1 of 6

NOTES

(1) All entries are made from the console dial pad.
(2) Trunk lamp remains lit throughout procedure.
(3) A display of E0 indicates that an incorrect key has been pressed. Press the key specified in the MAP and proceed.

SYNOPSIS

Select required tenant.
Enter equipment number
10-112/162-256
Enter trunk type code 3, 31, 6, or 61.
Enter I/C code.
Enter Busy Lamp assignment.
Press ENTER.

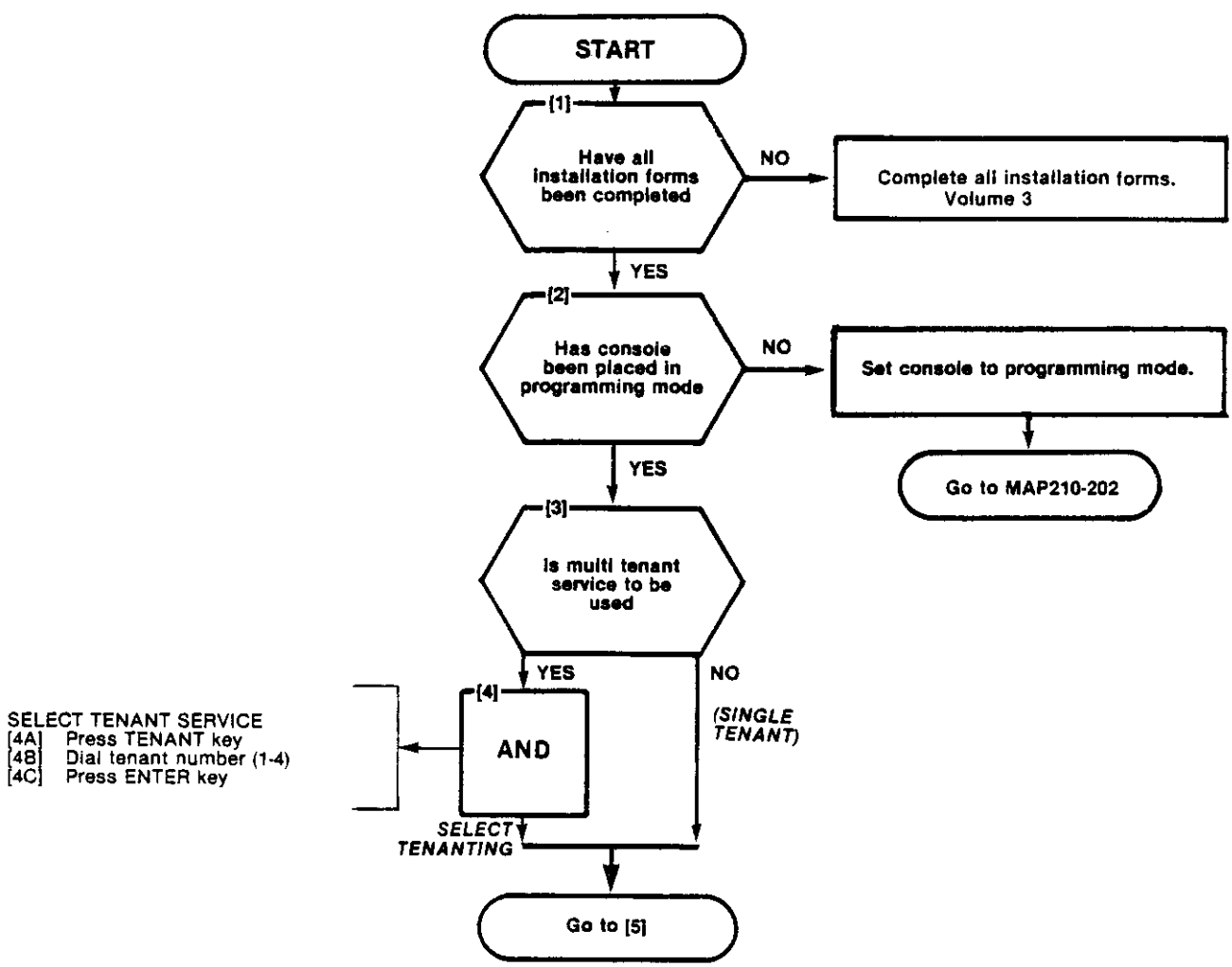

HARDWARE POSITION NUMBER	PLUG 7	PLUG 9	PLUG 11		EXTENSION UNIT NO.	TRUNK UNIT NO. (4 TRUNK)	TRUNK UNIT NO. (2 TRUNK)
	161 169 177 185 193 201	209 217 225 233 241 249			1		
	162 170 178 186 194 202	210 218 226 234 242 250			2	1	1
	163 171 179 187 195 203	211 219 227 235 243 251			3		
	164 172 180 188 196 204	212 220 228 236 244 252			4	2	
	165 173 181 189 197 205	213 221 229 237 245 253			5		
	166 174 182 190 198 206	214 222 230 238 246 254			6	3	2
	167 175 183 191 199 207	215 223 231 239 247 255			7		
	168 176 184 192 200 208	216 224 232 240 248 256			8	4	
	1 2 3 4 5 6	7 8 9 10 11 12	13 14 15 16 17 18	19 20 21 22	CARD POSITION		
	31 32 33 34 35 36	37 38 39 40 41 42	43 44 45 46 47 48	49 50 51 52	SLOT NUMBER		
	PLUG 8	PLUG 10	PLUG 12				

SHELF 2 (SX-200 ONLY)

HARDWARE POSITION NUMBER	PLUG 1	PLUG 3	PLUG 5						EXTENSION UNIT NO.	TRUNK UNIT NO. (4 TRUNK)	TRUNK UNIT NO. (2 TRUNK)
	001 009 017 025 033 041	049 057 065 073 081 089	097 105	RECEIVER NO. 1	CONSOLE CONTROL CARD	CONSOLE CONTROL CARD	TONE CONTROL		1		
	002 010 018 026 034 042	050 058 066 074 082 090	098 106						2	1	1
	003 011 019 027 035 043	051 059 067 075 083 091	099 107					RESERVED	3		
	004 012 020 028 036 044	052 060 068 076 084 092	100 108					FOR	4	2	
	005 013 021 029 037 045	053 061 069 077 085 093	101 109					COMMON	5		
	006 014 022 030 038 046	054 062 070 078 086 094	102 110					CONTROLS	6	3	2
	007 015 023 031 039 047	055 063 071 079 087 095	103 111						7		
	008 016 024 032 040 048	056 064 072 080 088 096	104 112						8	4	
	1 2 3 4 5 6	7 8 9 10 11 12	13 14 15 16 17 18					19 20 21 22	CARD POSITION		
	1 2 3 4 5 6	7 8 9 10 11 12	13 14 15 16 17 18					19 20 21 22	SLOT NUMBER		
	PLUG 2	PLUG 4	PLUG 6								

642

SHELF 1

NOTES: 1. EQUIPMENT POSITION 001 IS RESERVED FOR THE TEST LINE AND MUST THEREFORE BE EQUIPPED WITH A LINE CARD.
2. TRUNK EQUIPMENT NUMBER IS SAME AS INDIVIDUAL TRUNK ACCESS CODE.

Fig. 210-1 Hardware/Equipment Numbering

PROGRAM DID TRUNKS
MAP210-210
Issue 2, February 1982
Sheet 3 of 6

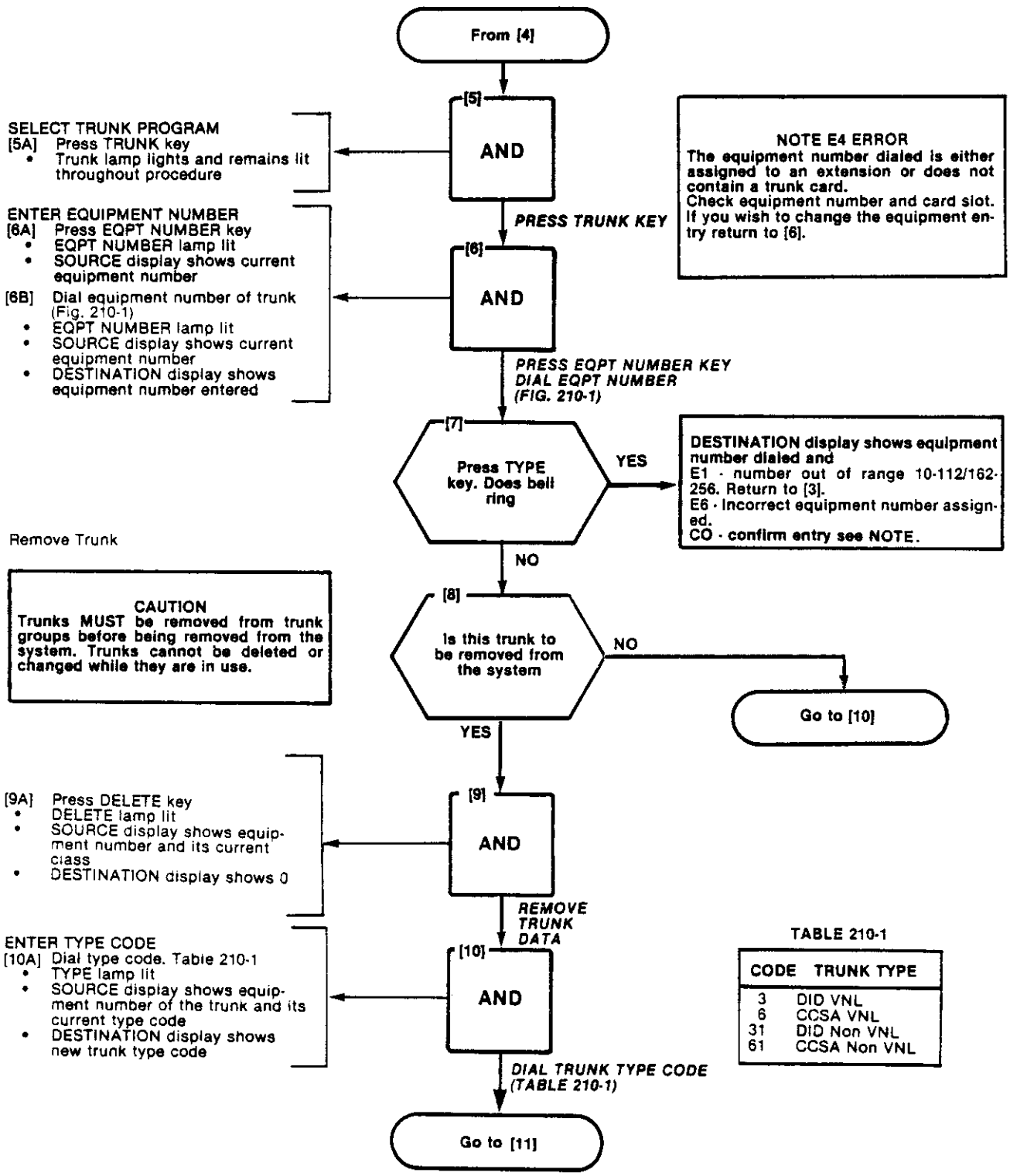

TABLE 210-1

CODE	TRUNK TYPE
3	DID VNL
6	CCSA VNL
31	DID Non VNL
61	CCSA Non VNL

PROGRAM DID TRUNKS
MAP210-210
Issue 2. February 1982
Sheet 4 of 6

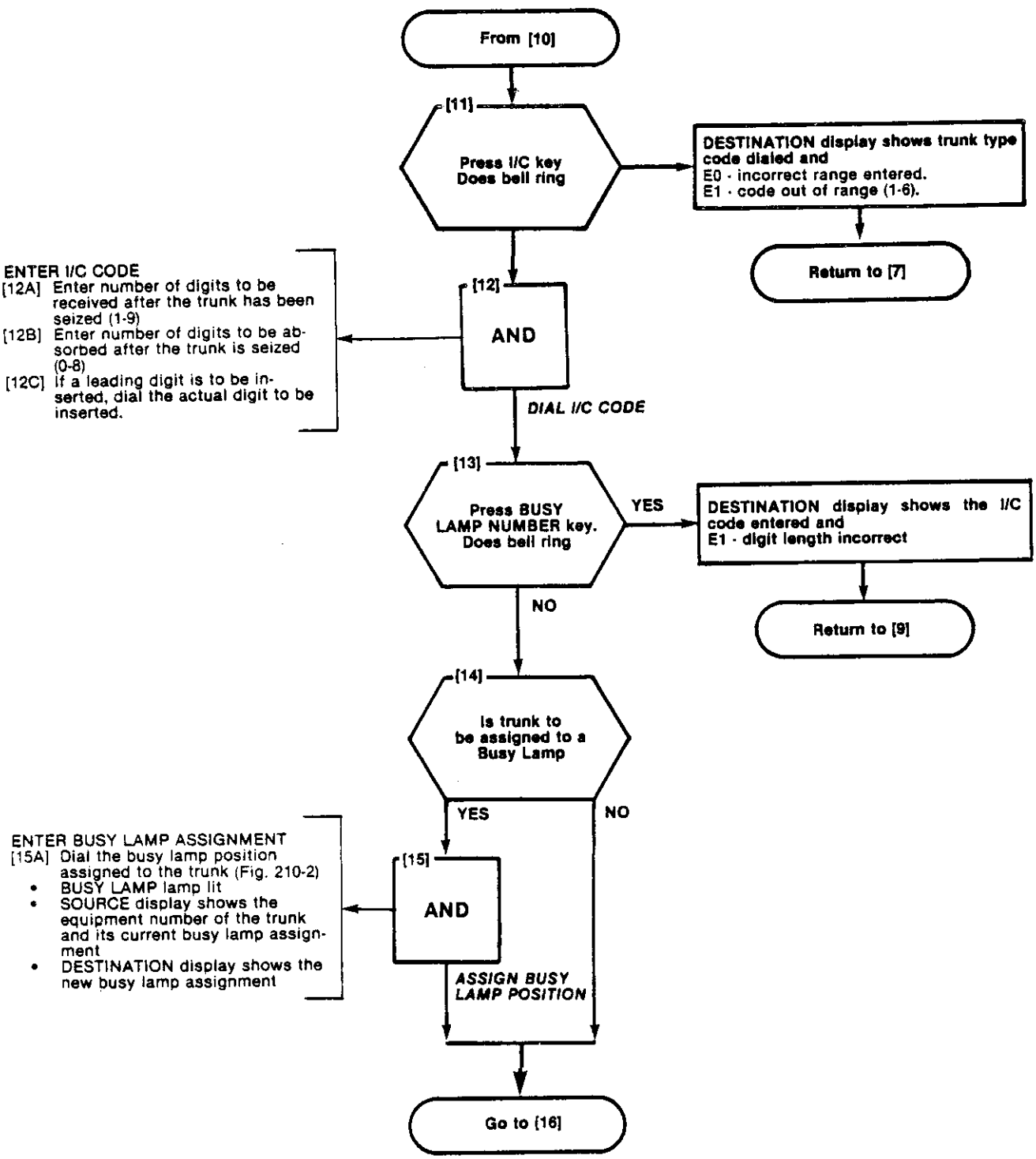

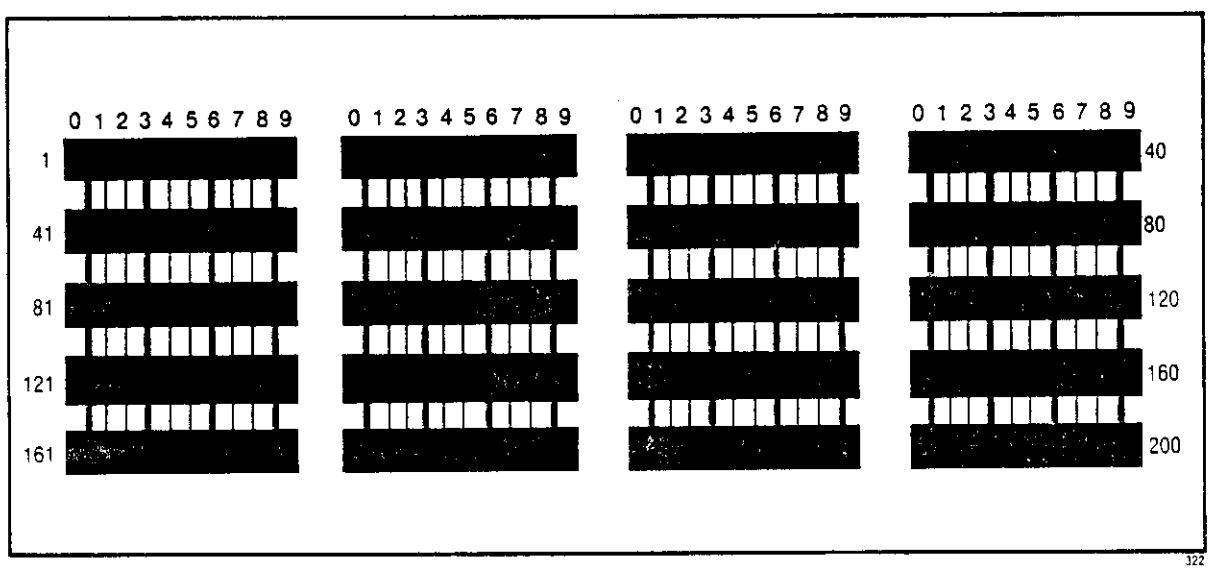

Fig. 210-2 Busy Lamp Position Numbering

PROGRAM DID TRUNKS
MAP210-210
Issue 2, February 1982
Sheet 6 of 6

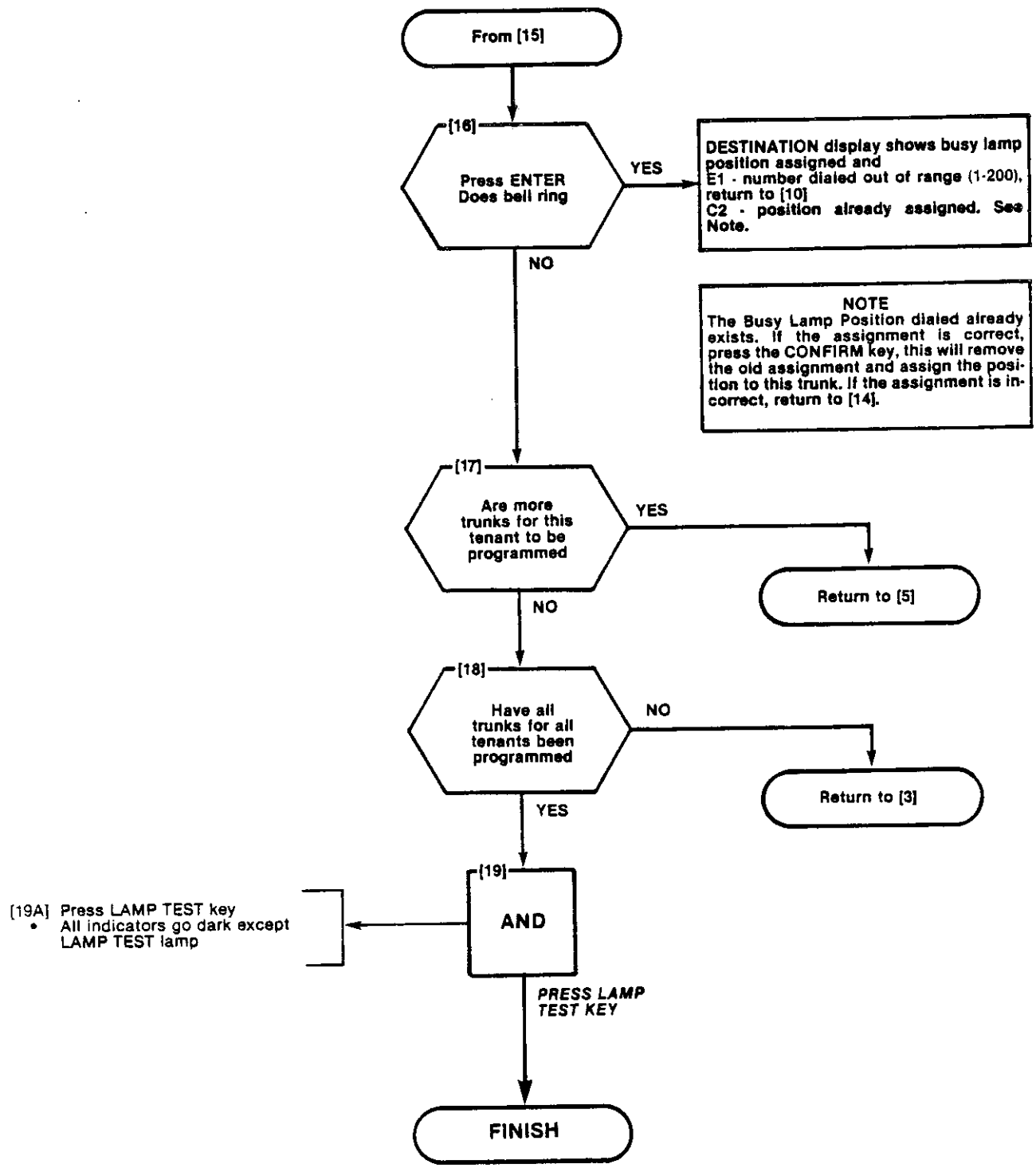

PROGRAM TRUNK GROUPS
MAP210-211
Issue 2. February 1982
Sheet 1 of 7

NOTES

(1) All entries are made from the console dial pad.
(2) TRUNK GROUP lamp remains lit throughout procedure.
(3) A display of E0 indicates that an incorrect key has been pressed, press the key specified in the MAP.
(4) If an equipment number is to be changed all trunks within the trunk group must be re-entered.

SYNOPSIS

Select required tenant.
Set up trunk group and access code.
Assign trunk group type, Toll Deny and Overflow Group codes.
Enter all trunk equipment numbers assigned to the trunk group.

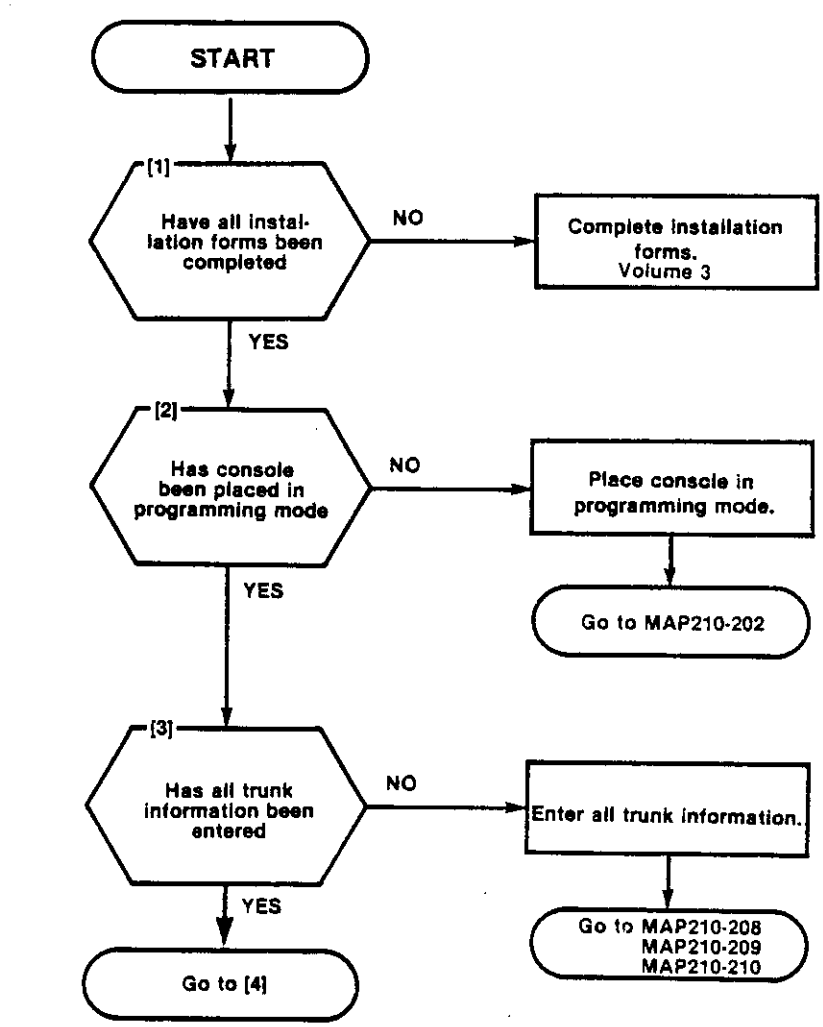

PROGRAM TRUNK GROUPS
MAP210-211
Issue 2, February 1982
Sheet 2 of 7

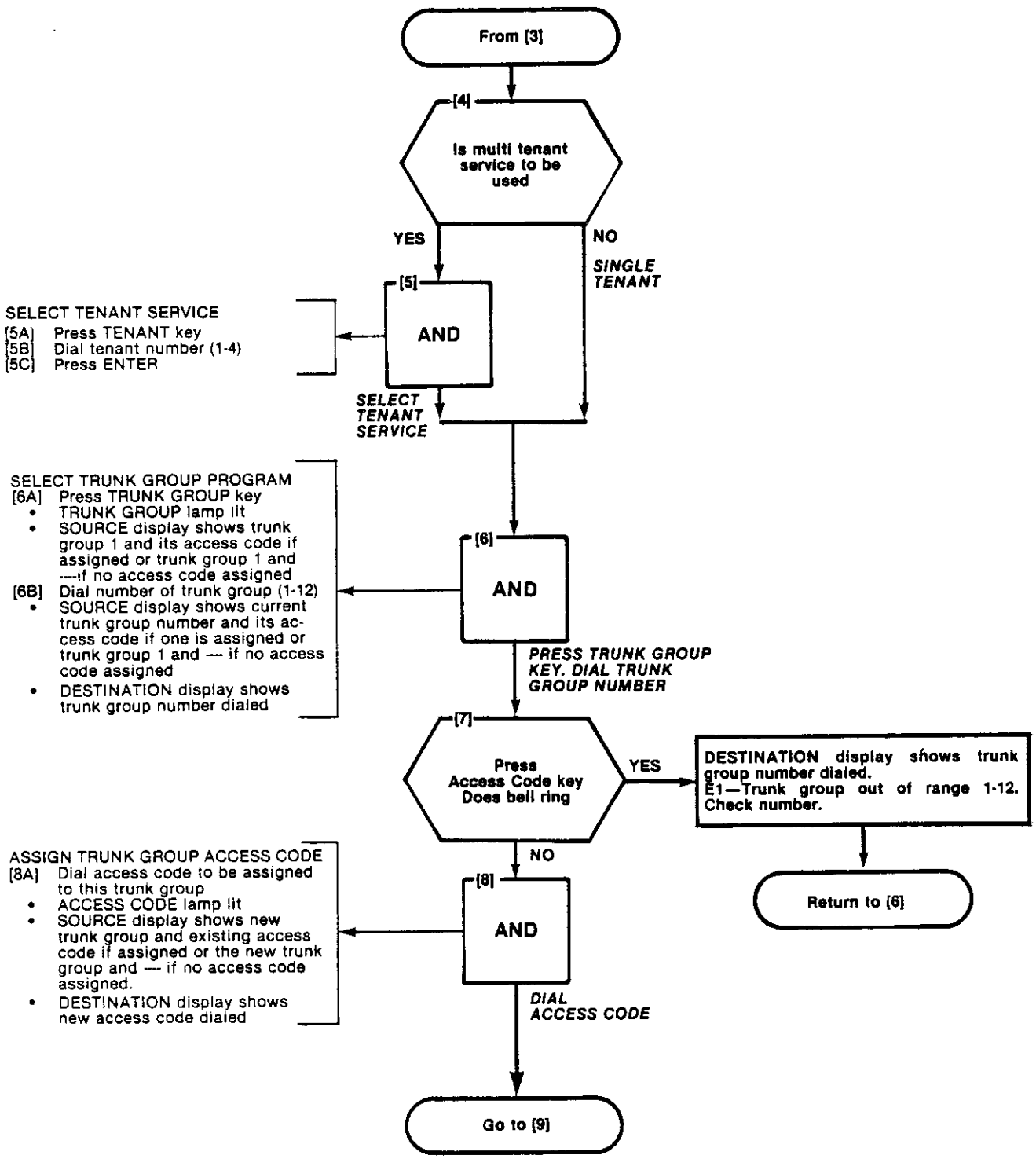

PROGRAM TRUNK GROUPS
MAP210-211
Issue 2. February 1982
Sheet 3 of 7

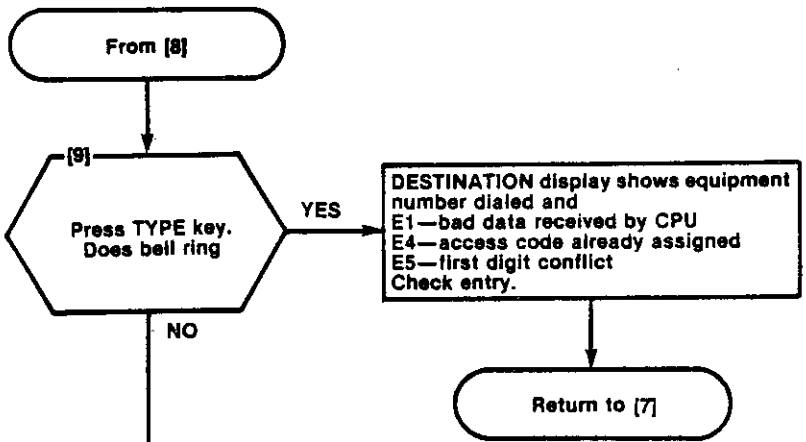

ASSIGN TRUNK TYPE

[10A] Dial trunk type code (Table 211-1)
- TYPE lamp lit
- SOURCE display shows trunk group number and current type
- DESTINATION display four digit type code dialed

DIAL TYPE CODE TABLE 211-1

TABLE 211-1

Entry	Code	Description
First digit Note 1	1	No Answer Supervision
	2	Answer Supervision
	3	Toll Supervision
	4	Outgoing audio inhibited until answer supervision
Second digit	1	No message register
	2	Message register
	3	SMDR without message register
	4	SMDR with message register
Third digit Note 2	†1	Rotary dial office, no wait for dial tone
	†2	Rotary dial office, wait for dial tone
	‡3	DTMF dial office, no wait for dial tone
	‡4	DTMF dial office, wait for dial tone tone
Fourth digit Note 3	1	CO trunk
	2	Non-CO trunk
	3	Identified Trunk Group (Non CO)

NOTE 1
- If answer supervision is not required (or not provided by the CO), then use 1 - No Answer Supervision.
- If tandem trunking or Message Registration is used, then use 2 - Answer Supervision.
- If supervision is used to indicate toll calls, and this feature is required, then use 3 - Toll Supervision.
- If audio cut-through or tie trunk tandem calls is required only after receipt of answer supervision, then use 4 -Outgoing Audio Inhibit until Answer Supervision.

NOTE 2
- If "wait for dial tone" is selected then any digits dialed prior to receipt of CO dial tone are ignored by the PABX. This prevents circumvention of the toll denial by dialing a fast valid digit before CO dial tone is received.

NOTE 3
- If the fourth digit selected is 3, the third digit must be 1.

† If extensions are DTMF the trunk will convert to dial pulse. Early line split is not provided.

‡ Trunks will repeat DTMF or dial pulse signals.

PROGRAM TRUNK GROUPS
MAP210-211
Issue 2, February 1982
Sheet 4 of 7

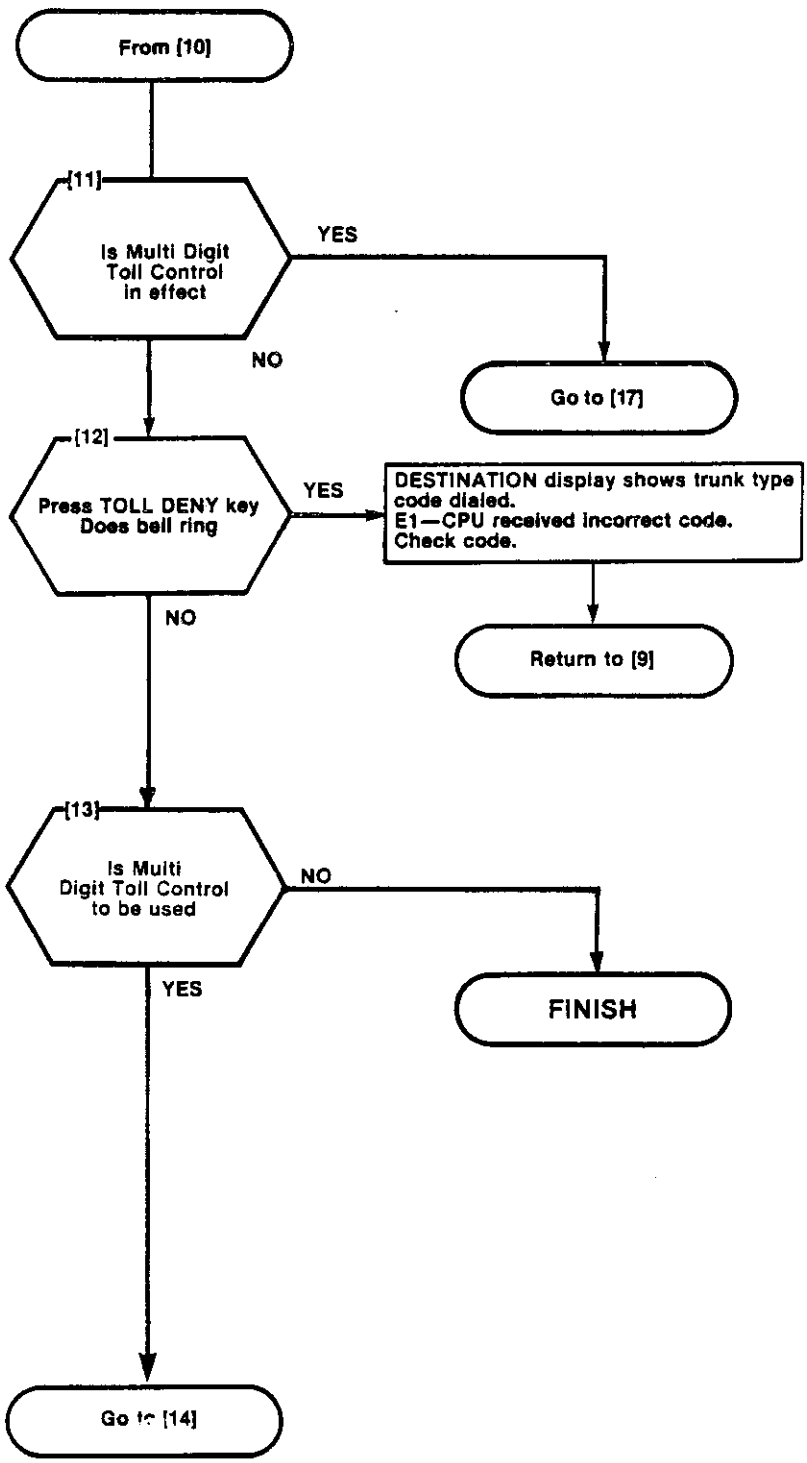

PROGRAM TRUNK GROUPS
MAP210-211
Issue 2, February 1982
Sheet 5 of 7

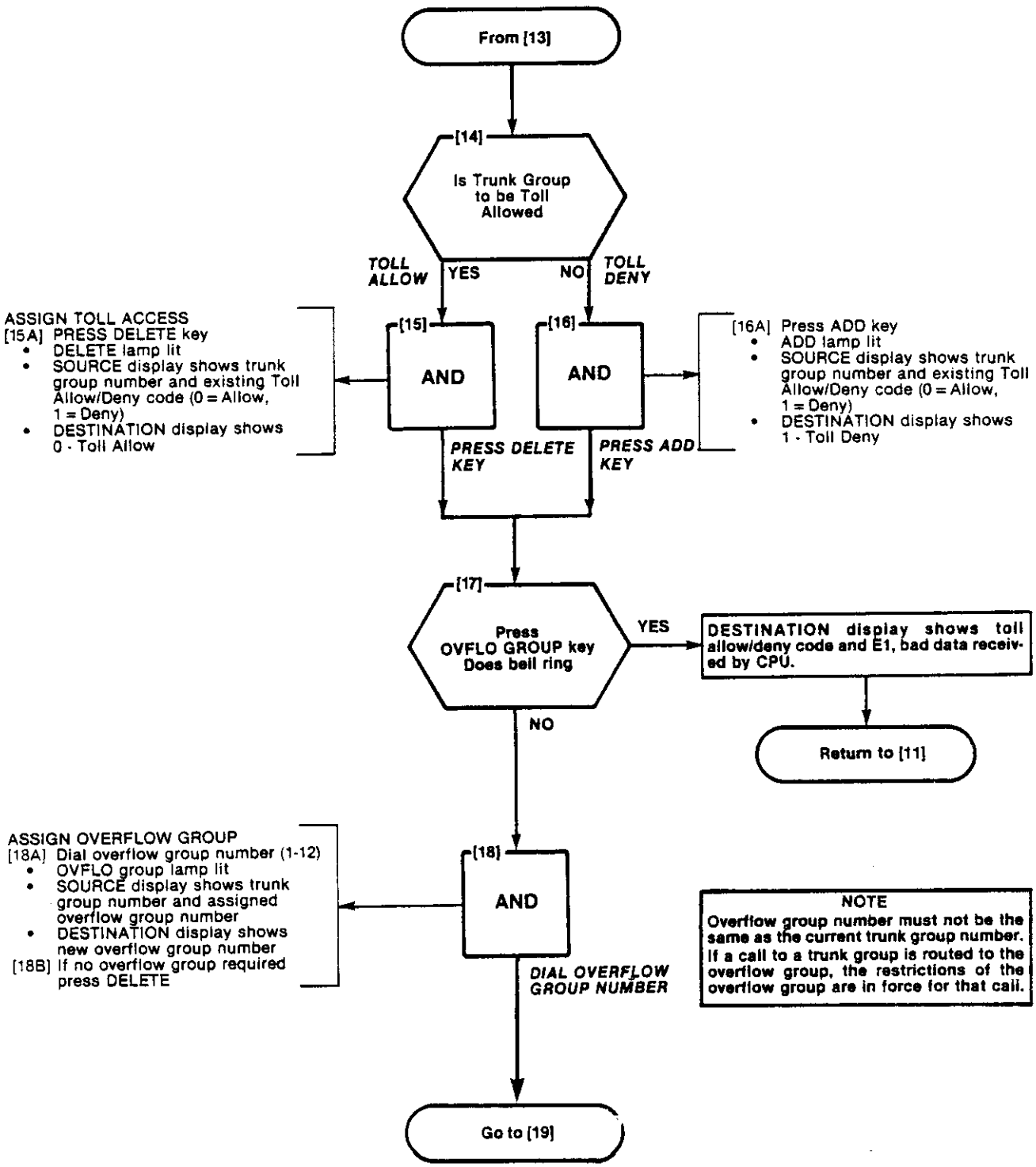

PROGRAM TRUNK GROUPS
MAP210-211
Issue 2, February 1982
Sheet 6 of 7

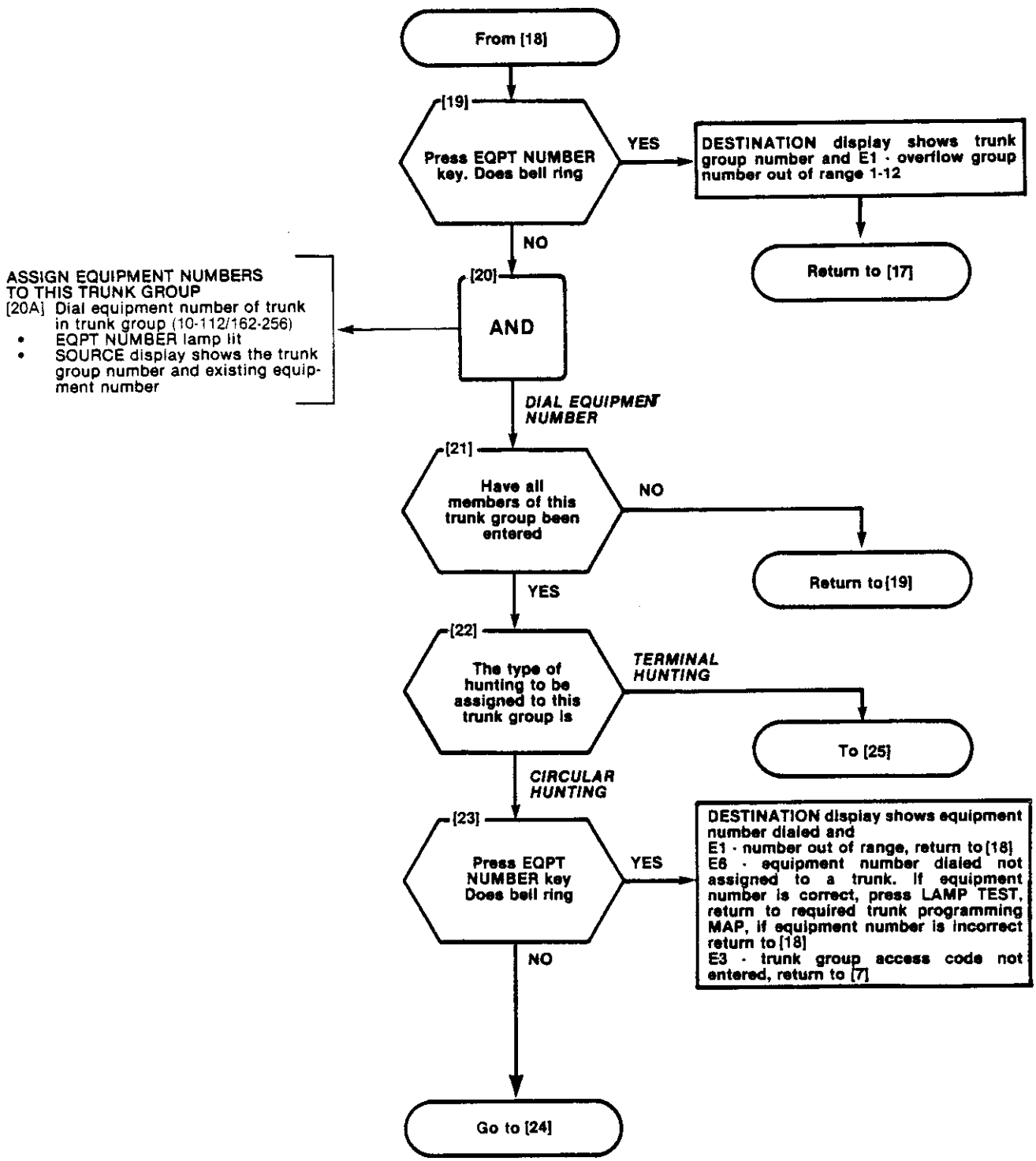

PROGRAM TRUNK GROUPS
MAP210-211
Issue 2. February 1982
Sheet 7 of 7

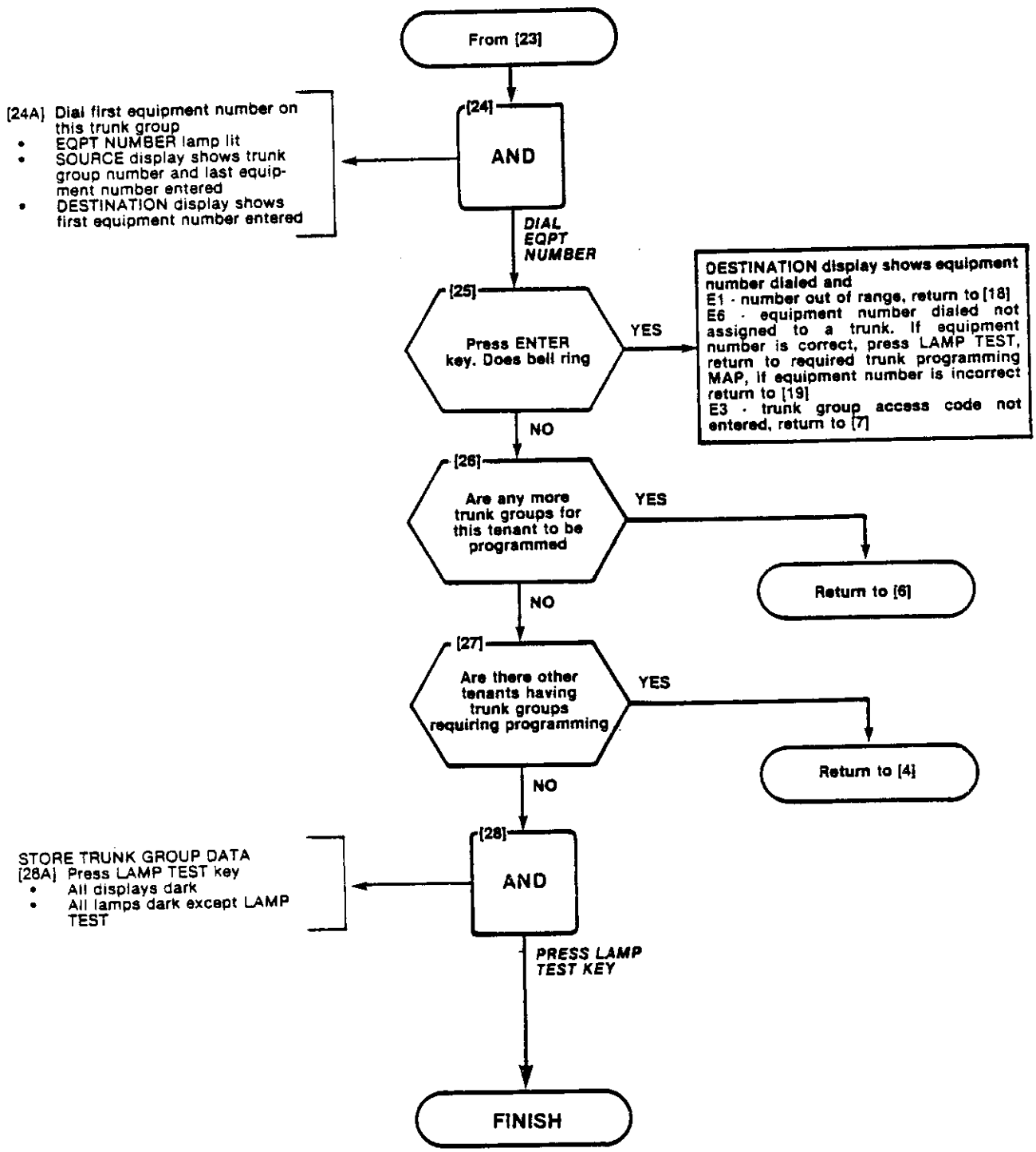

TERMINATING PROGRAMMING MODE
MAP210-212
Issue 2. February 1982
Sheet 1 of 1

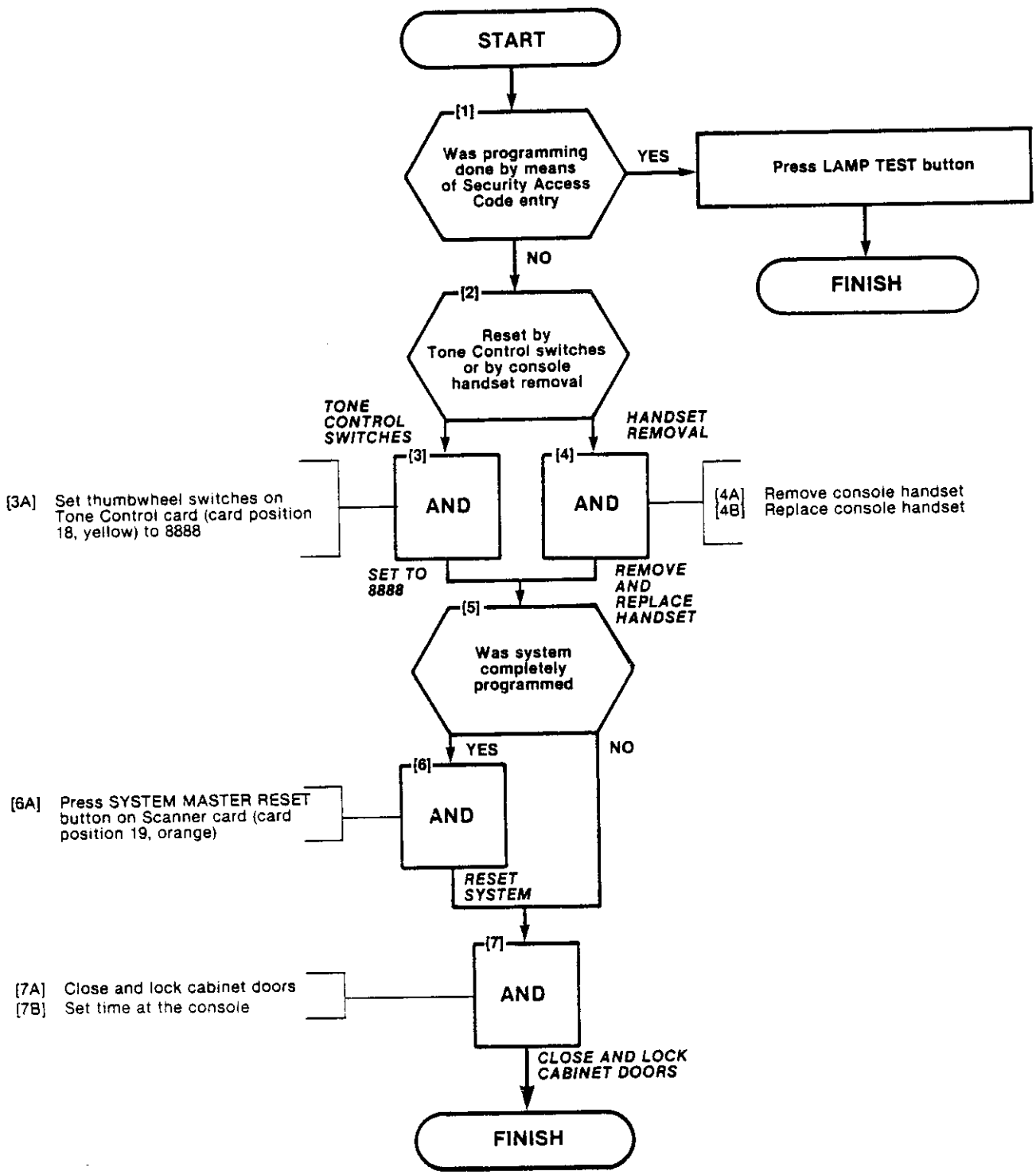

RANGE PROGRAMMING FOR EXTENSIONS
MAP210-213
Issue 2, February 1982
Sheet 1 of 3

SYNOPSIS
RANGE PROGRAMMING

Enter RANGE programming
Enter first equipment number, dial *
Enter last equipment number
Enter first EXTN number
Enter first BUSY LAMP NUMBER
Enter COS number for Range
Enter Toll Deny
Enter Pick-Up Group
Enter Data

START

[1] Have all installation forms been completed

NO → Complete installation forms. Volume 3

YES

[2] Has console been placed in program mode

NO → Place Console in programming mode → Go to MAP210-202 Return to 3

YES

[3] AND

[3A] Press the TENANT/RANGE button.
- TENANT/RANGE LED lit.

ENTER RANGE PROGRAMMING

[4] AND

[4A] Press EQPT NUMBER button.
- EQPT NUMBER LED lit.

[4B] Dial starting equipment number. (Fig. 213-1) * and last equipment number Fig. 213-2.

ENTER EQUIPMENT RANGE PARAMETERS

Go to [5]

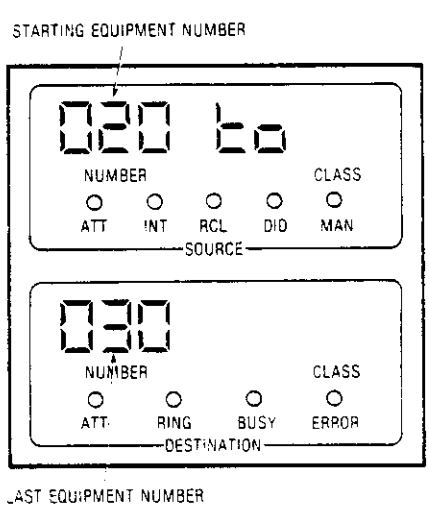

Fig. 213-2

RANGE PROGRAMMING FOR EXTENSIONS
MAP210-213
Issue 2, February 1982
Sheet 2 of 3

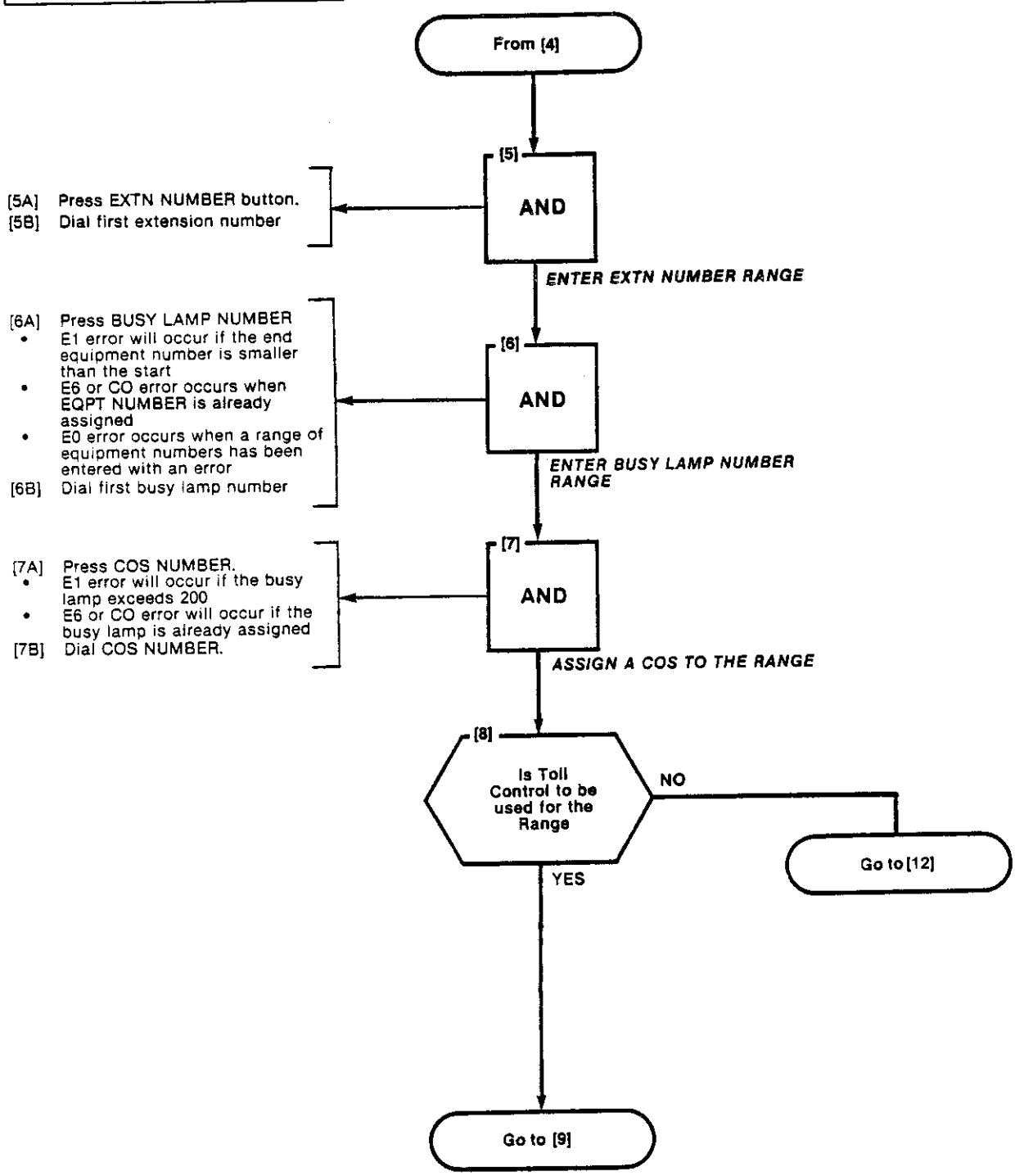

RANGE PROGRAMMING FOR EXTENSIONS
MAP210-213
Issue 2, February 1982
Sheet 3 of 3

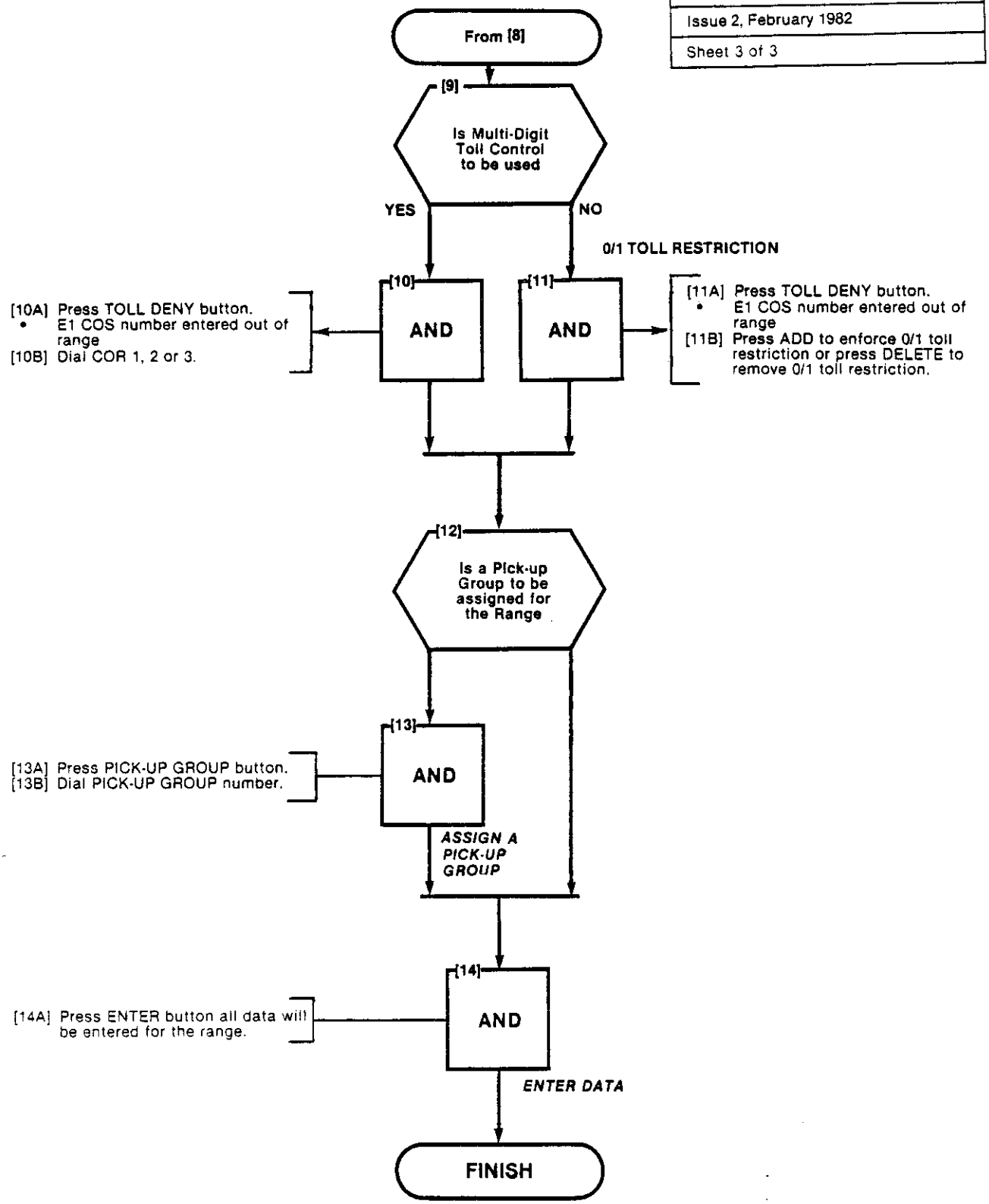

SELECTION OF EXTENDED PROGRAMMING
MAP210-221
Issue 2, February 1982
Sheet 1 of 3

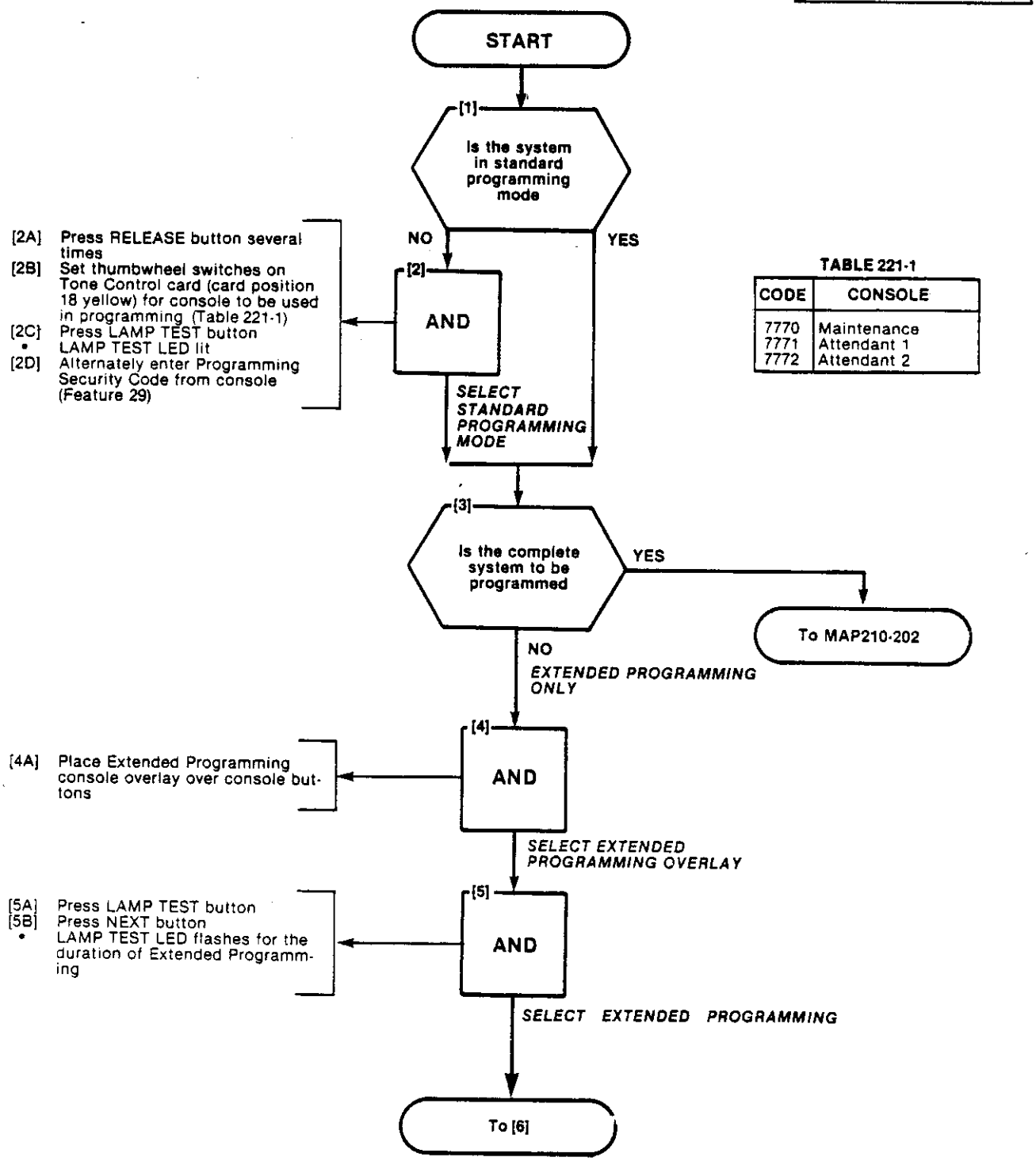

TABLE 221-1

CODE	CONSOLE
7770	Maintenance
7771	Attendant 1
7772	Attendant 2

SELECTION OF EXTENDED PROGRAMMING
MAP210-221
Issue 2, February 1982
Sheet 2 of 3

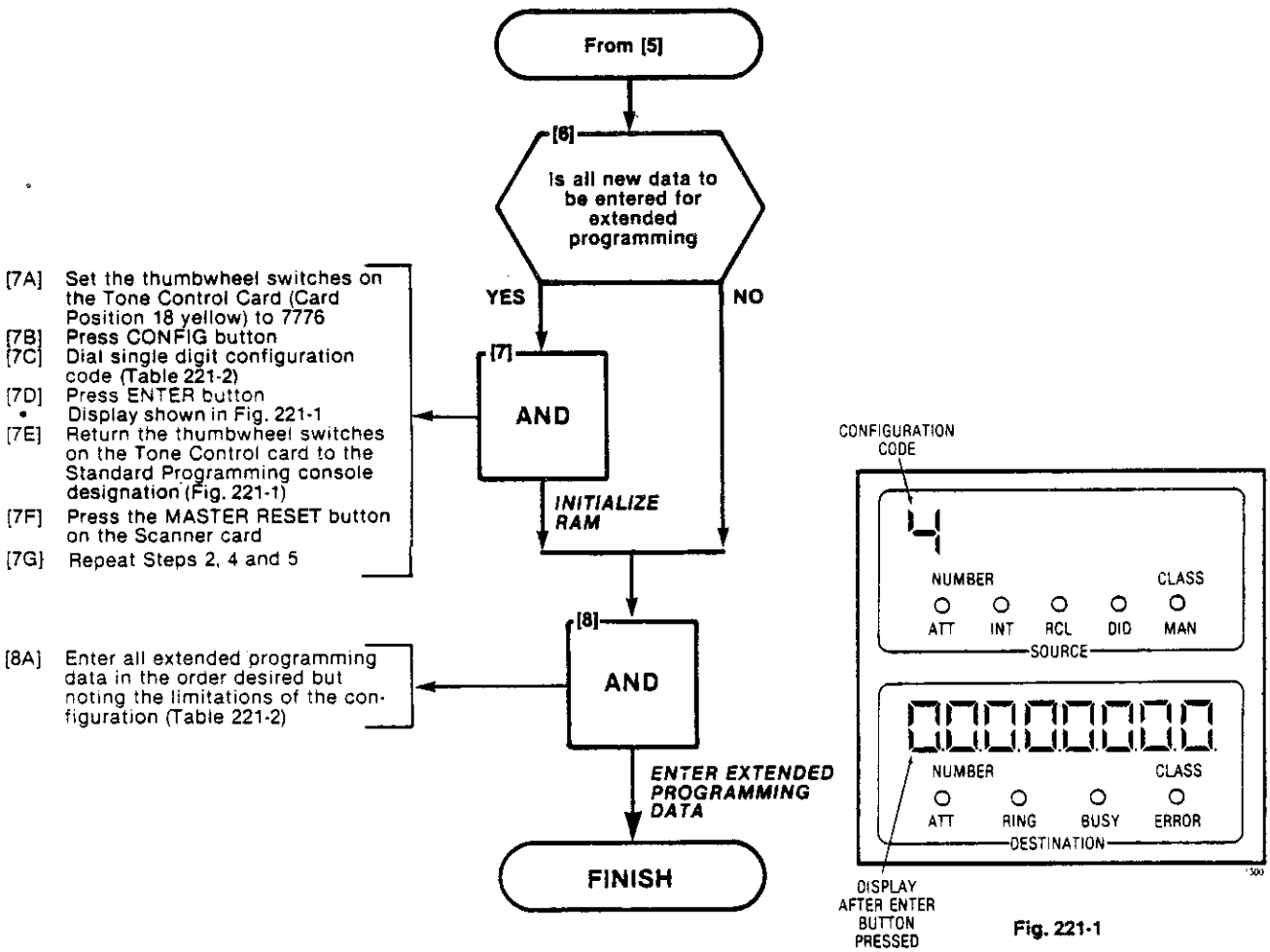

Fig. 221-1

TABLE 221-2
CONFIGURATIONS

CONFIGURATION	WAKE-UP	MULTI DIGIT TOLL CONTROL	SPEED CALL	AUTOMATIC ROUTE SELECTION
1	WU 1	TC 2	—	ARS 1
2	—	TC 2	SC 1	ARS 1
3	—	TC 1	SC 2	ARS 1
4	—	TC 3	—	ARS 1
5	WU 1	TC 1	—	ARS 2
6	—	—	SC 1	ARS 3
7	WU 1	TC 1	SC 1	ARS 1
	WU Automatic Wake-Up	TC 1 Basic TC 2 Standard TC 3 Extended	SC 1 Standard SC 2 Extended	ARS 1 Basic ARS 2 Standard ARS 3 Extended

ABSORB PLAN
MAP210-222
Issue 2, February 1982
Sheet 1 of 3

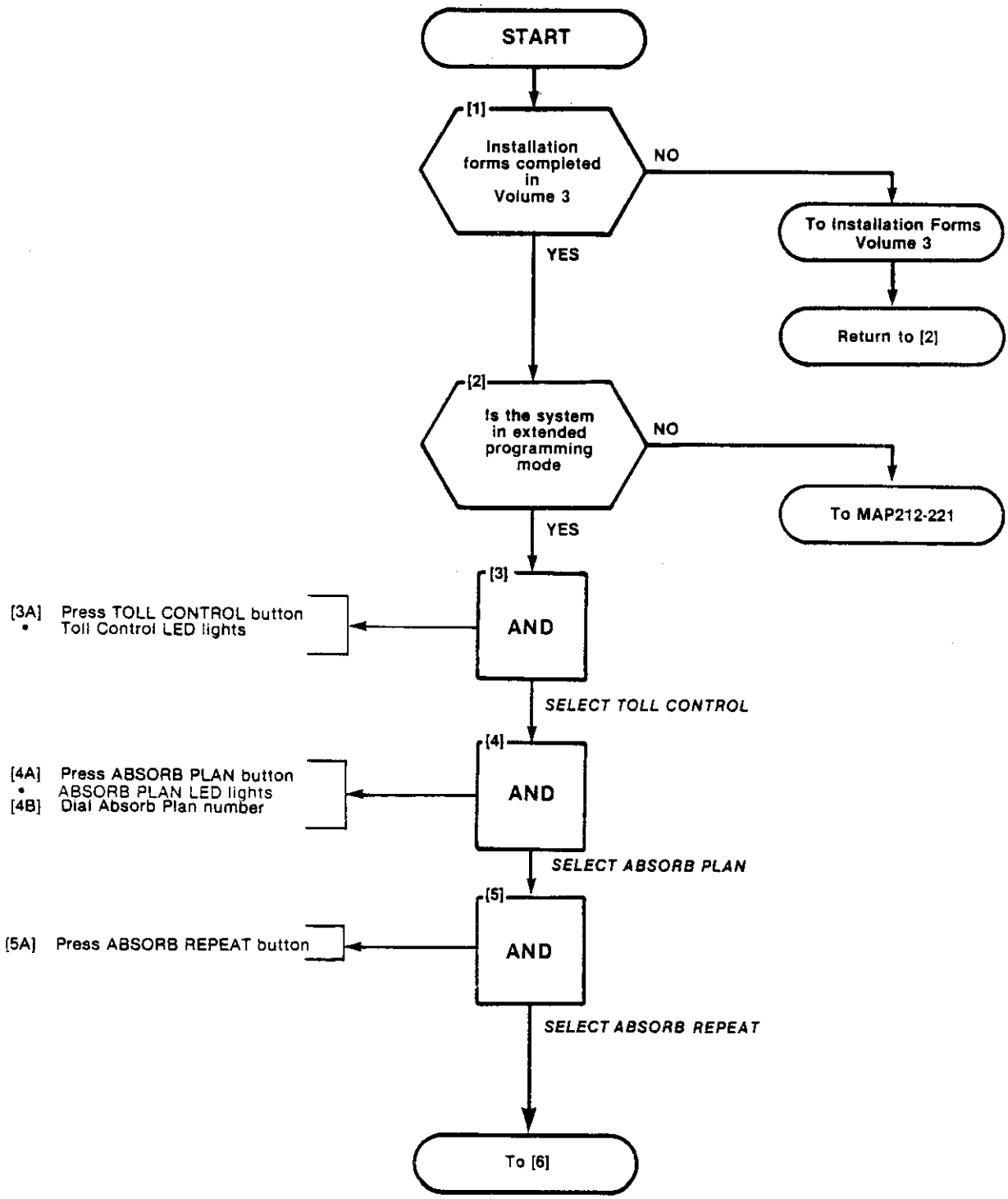

ABSORB PLAN
MAP210-222
Issue 2. February 1982
Sheet 2 of 3

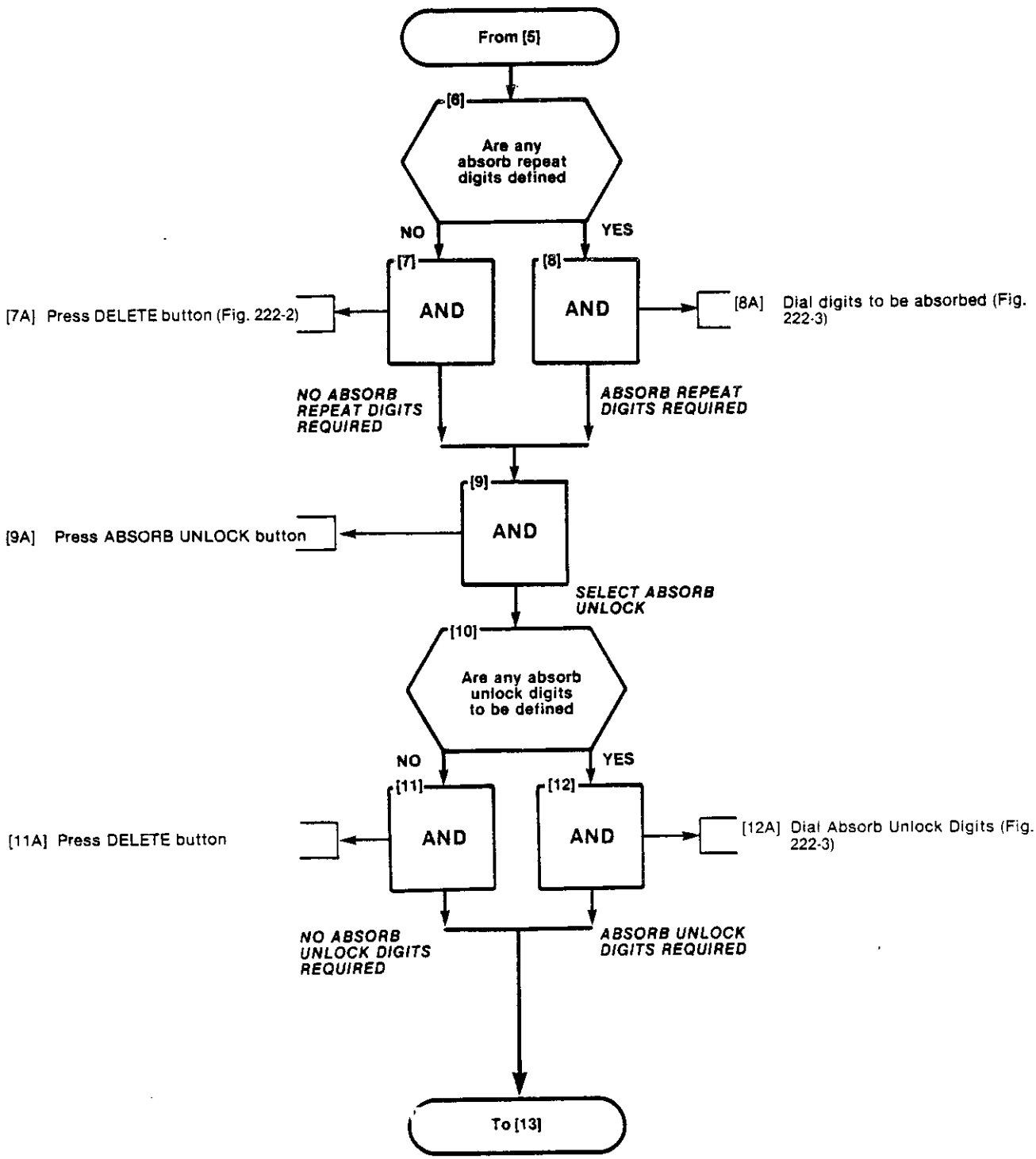

ABSORB PLAN
MAP210-222
Issue 2, February 1982
Sheet 3 of 3

From [12]

[13] Is there a second absorb plan to be programmed

YES → Return to [4]

NO

[14] AND

[14A] Press the ENTER button

ENTER ABSORB DATA

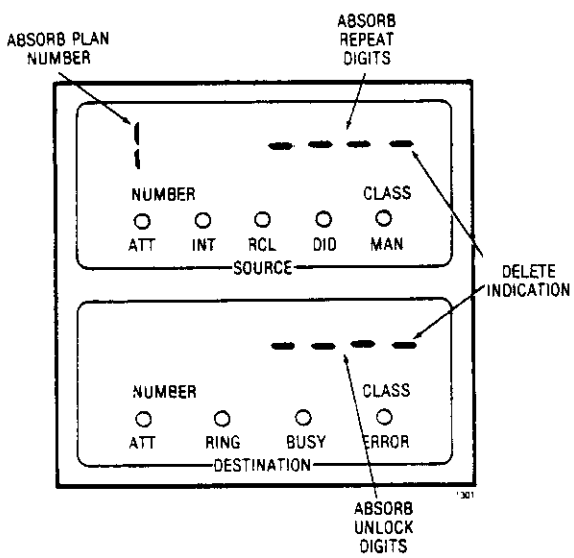

Fig. 222-2

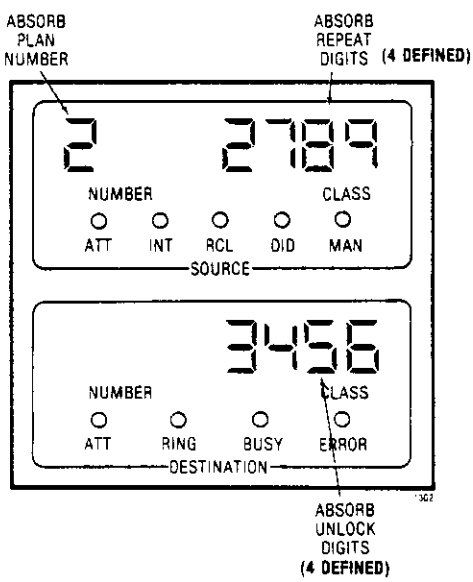

Fig. 222-3

FINISH

CONTROL PLAN
MAP210-223
Issue 2, February 1982
Sheet 1 of 4

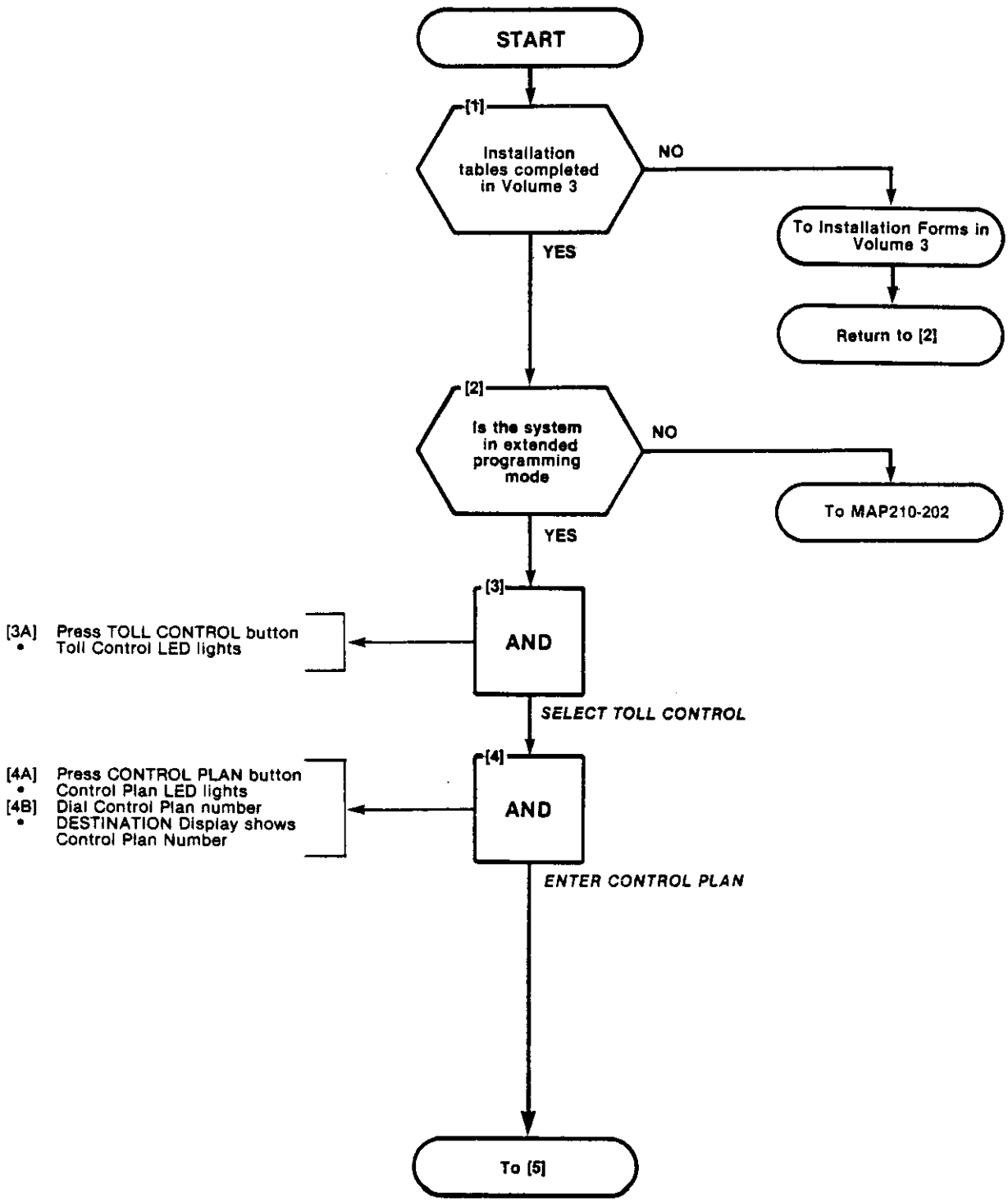

CONTROL PLAN
MAP210-223
Issue 2, February 1982
Sheet 2 of 4

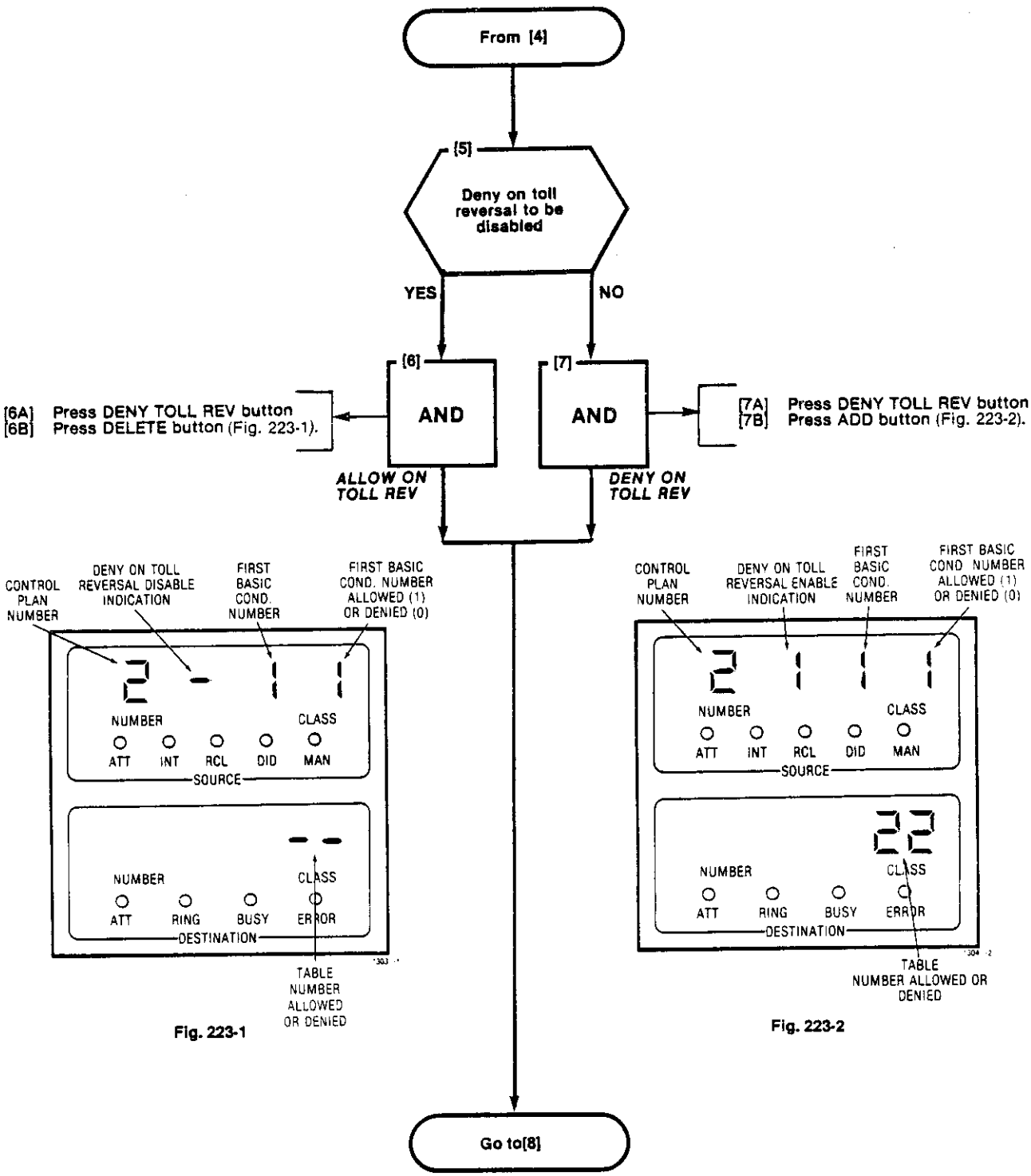

Fig. 223-1

Fig. 223-2

CONTROL PLAN
MAP210-223
Issue 2, February 1982
Sheet 3 of 4

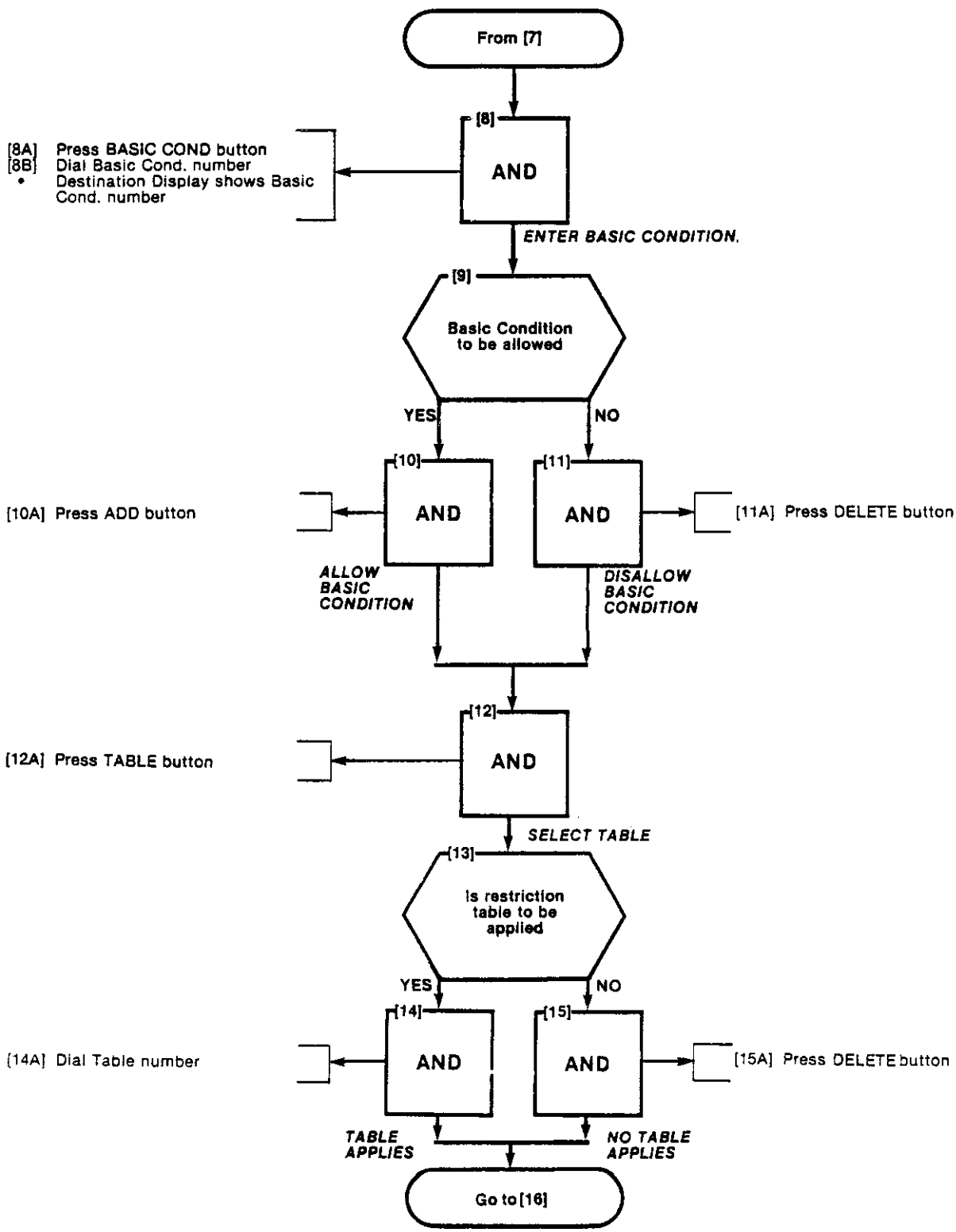

CONTROL PLAN
MAP210-223
Issue 2, February 1982
Sheet 4 of 4

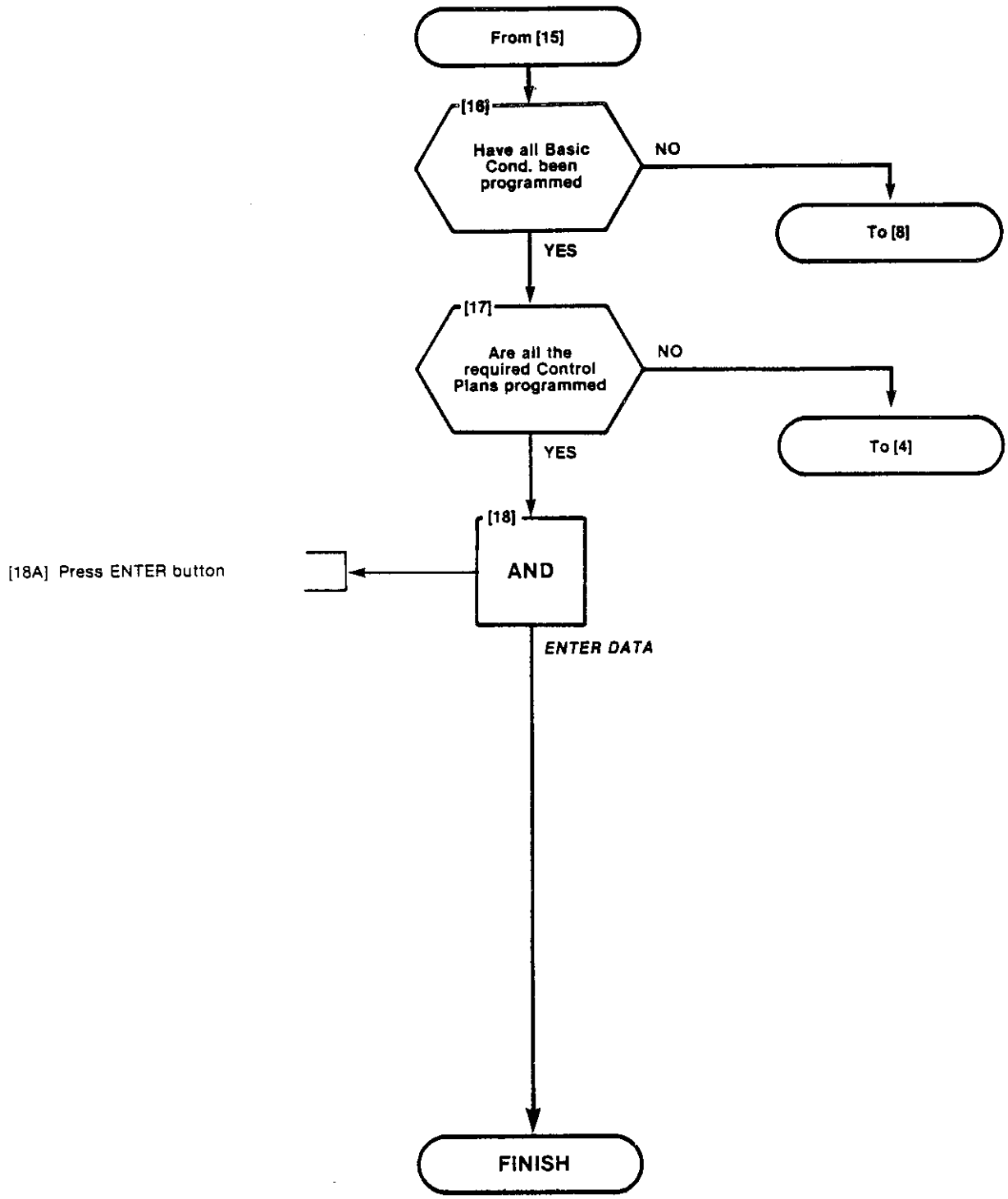

TRUNK GROUP CLASS OF RESTRICTION
MAP210-224
Issue 2, February 1982
Sheet 1 of 3

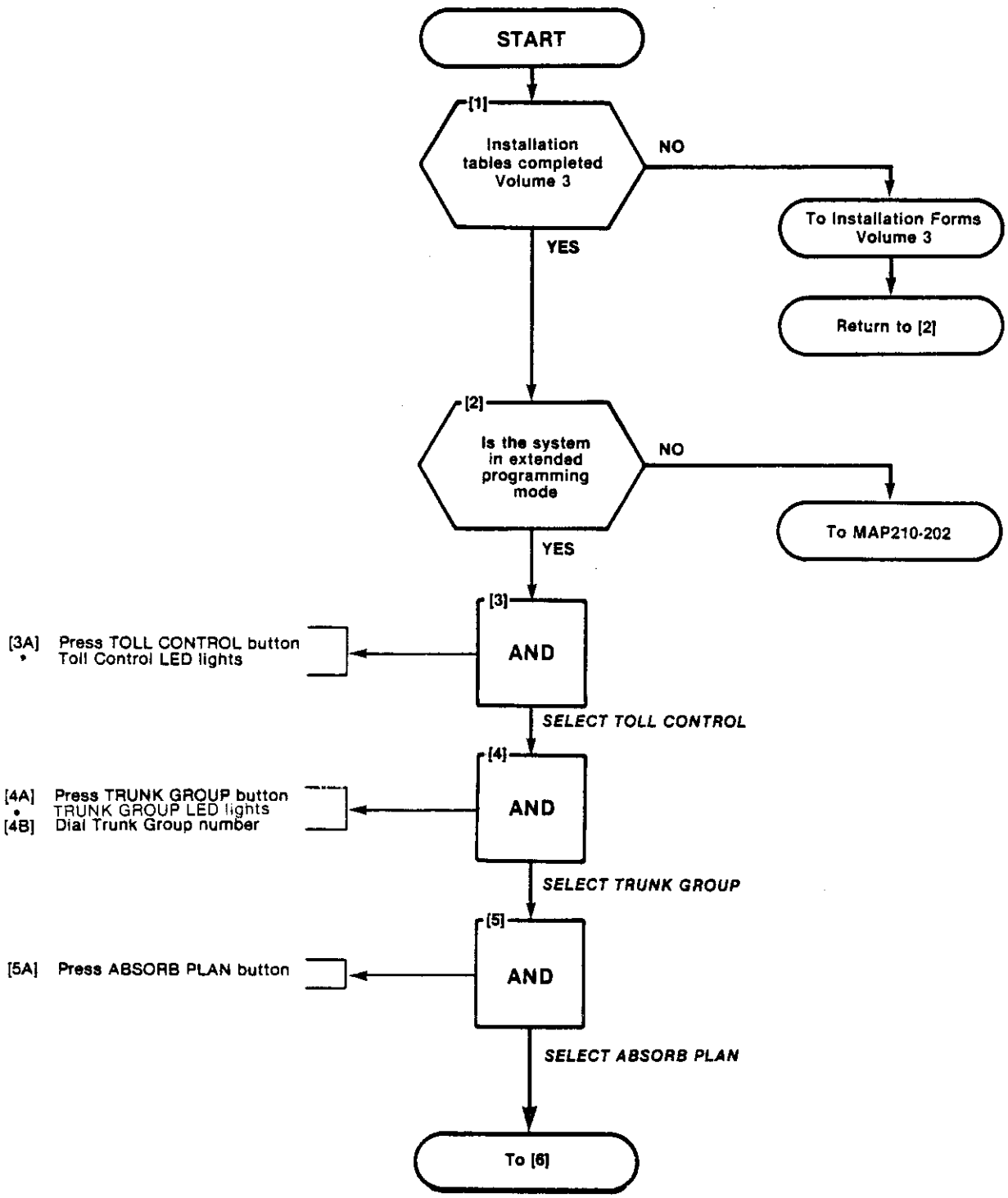

TRUNK GROUP CLASS OF RESTRICTION
MAP210-224
Issue 2, February 1982
Sheet 2 of 3

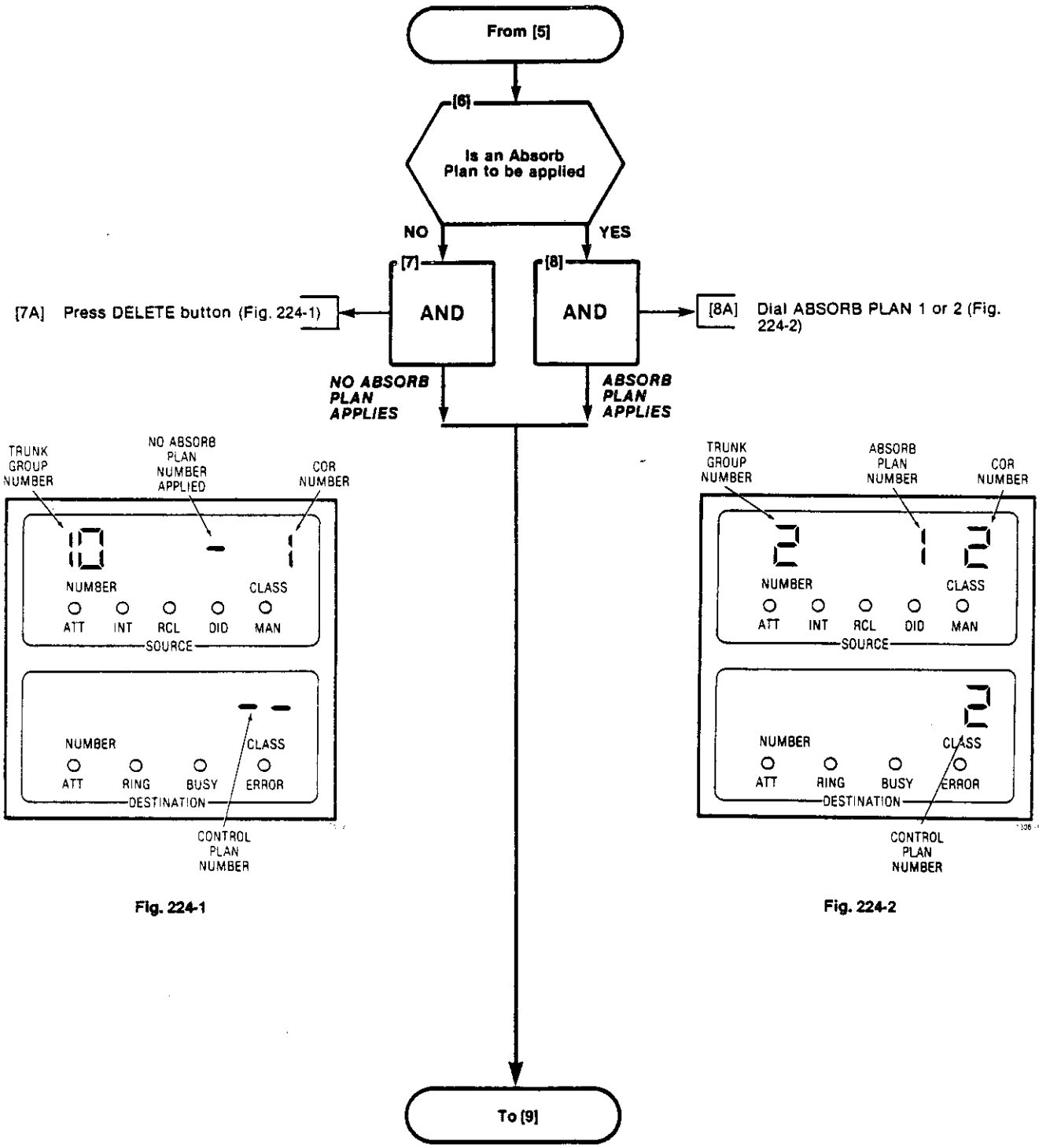

Fig. 224-1

Fig. 224-2

TRUNK GROUP CLASS OF RESTRICTION
MAP210-224
Issue 2, February 1982
Sheet 3 of 3

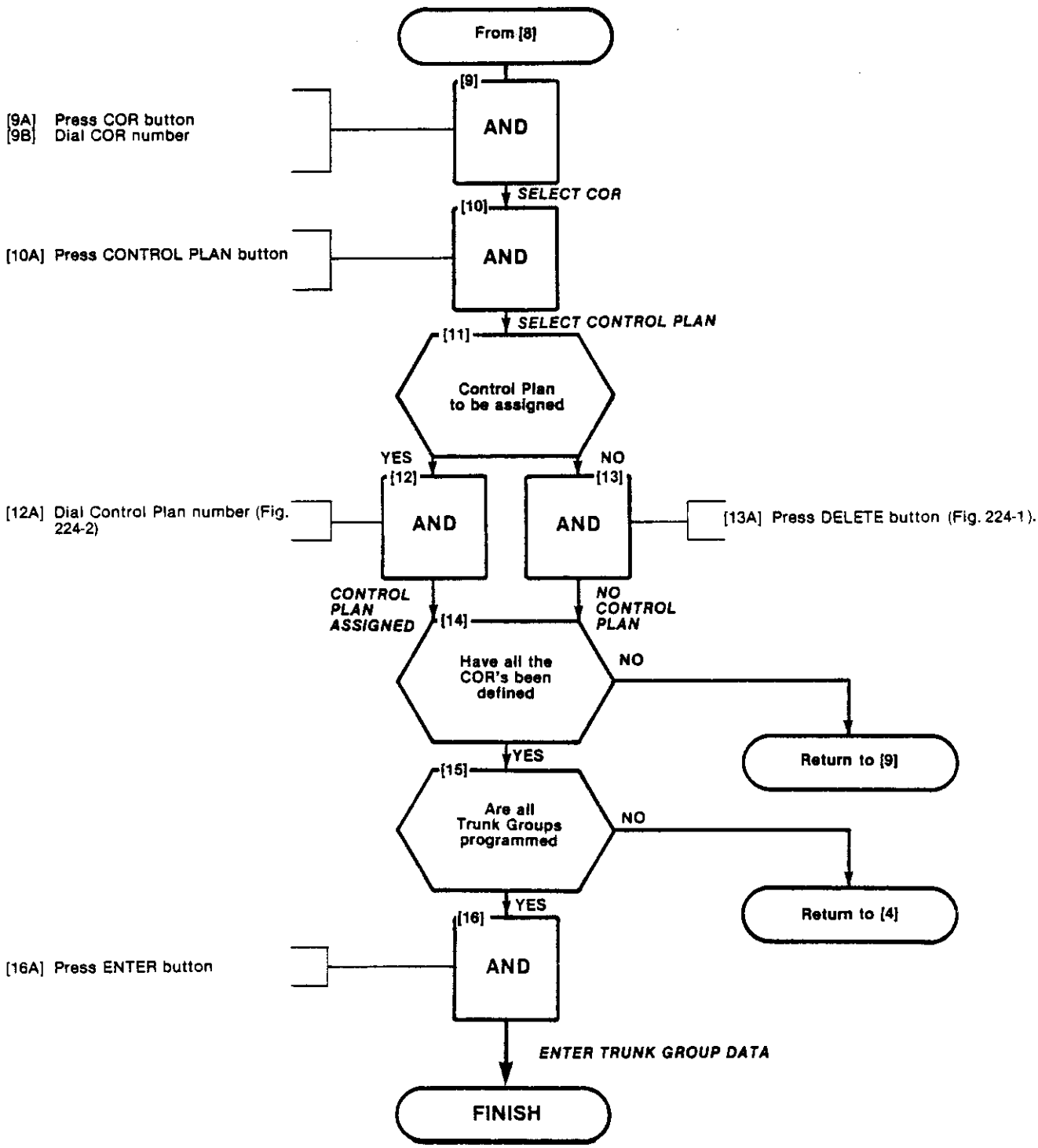

RESTRICTION TABLES
MAP210-225
Issue 2, February 1982
Sheet 1 of 2

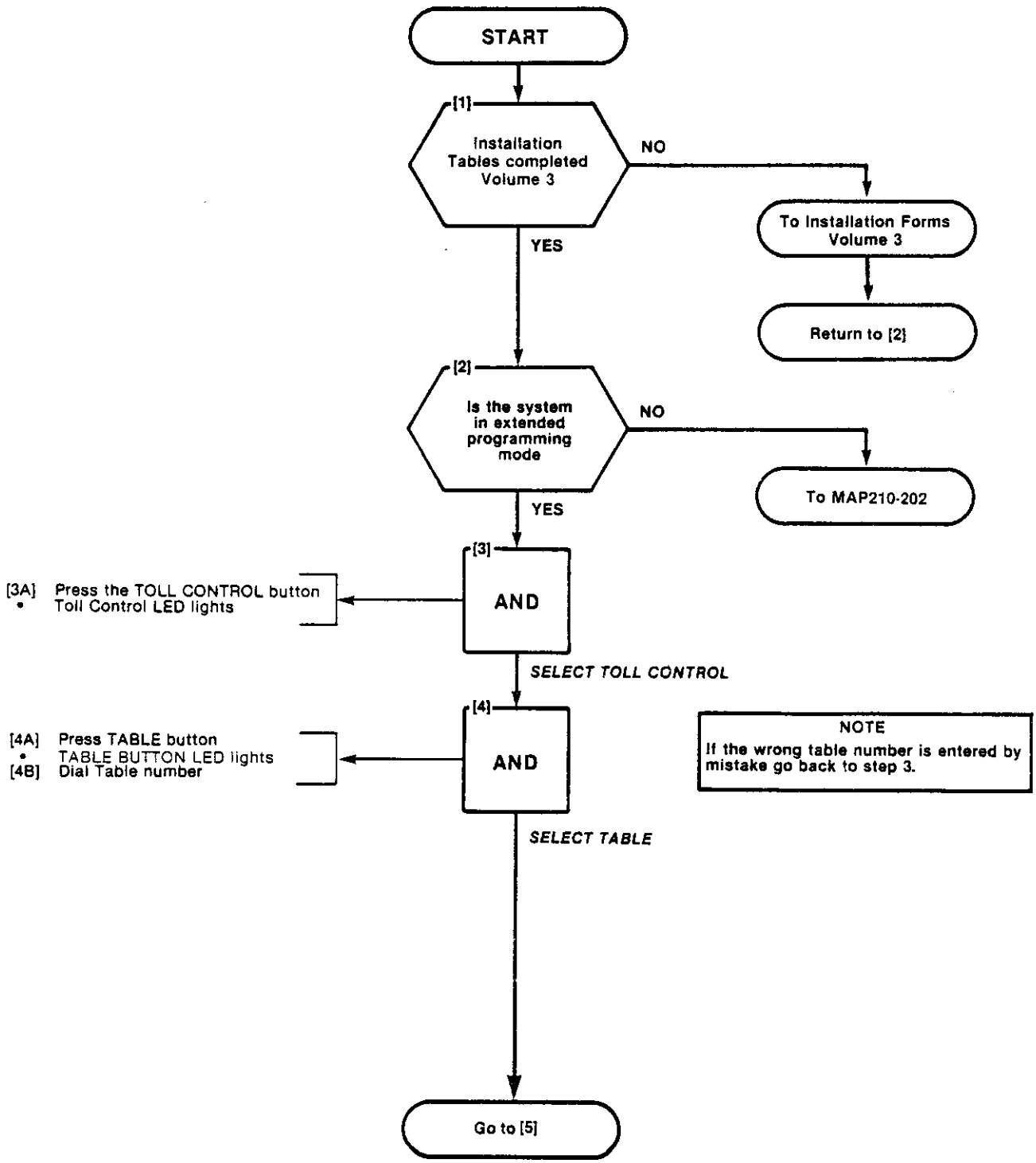

RESTRICTION TABLES
MAP210-225
Issue 2, February 1982
Sheet 2 of 2

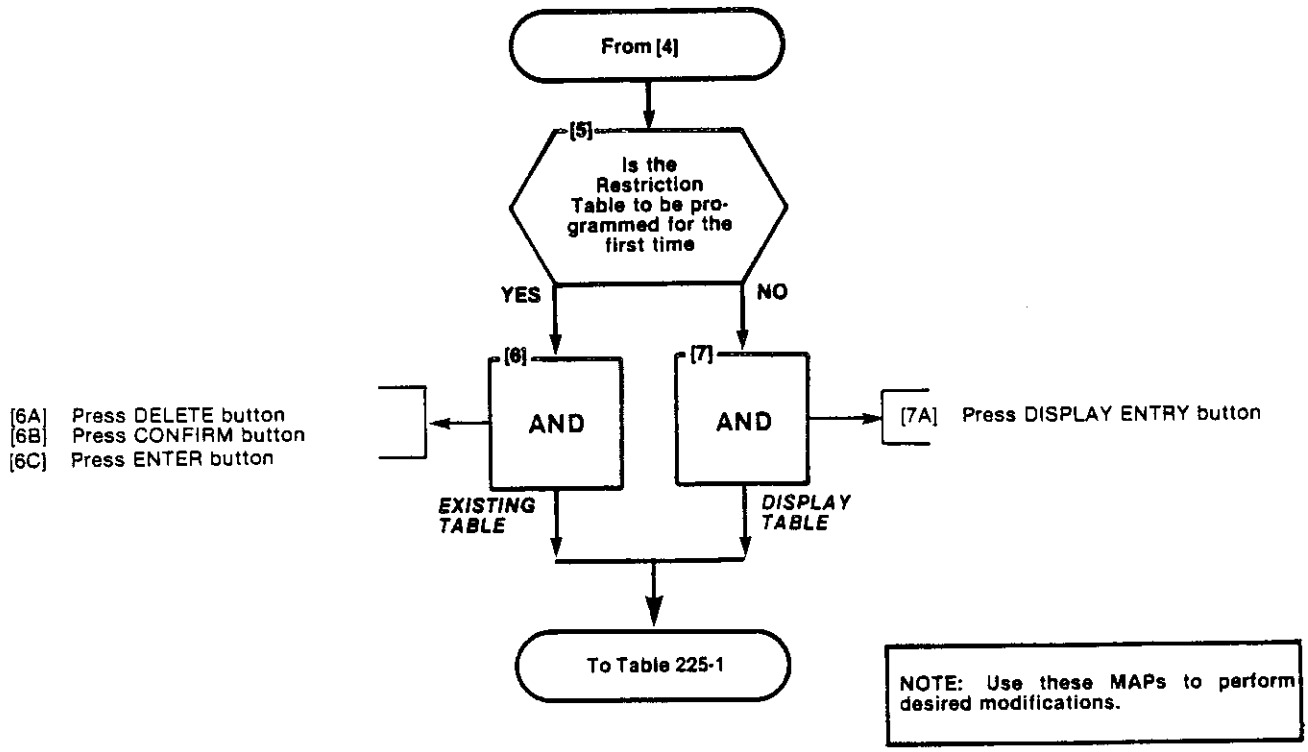

Table 225-1

OPTION	MAP NUMBER
Add an entry	210-226
Display sequential entries	210-227
Search for a specific entry	210-228
Delete entry being displayed	210-229
Terminated Programming	210-274

ADD AN ENTRY
MAP210-226
Issue 2, February 1982
Sheet 1 of 1

Note: If the wrong entry digits are keyed by mistake, attempt to add the entry as it was keyed. If the entry is accepted remove it with the delete key. If an error is given no further action is required, as the entry was ignored.

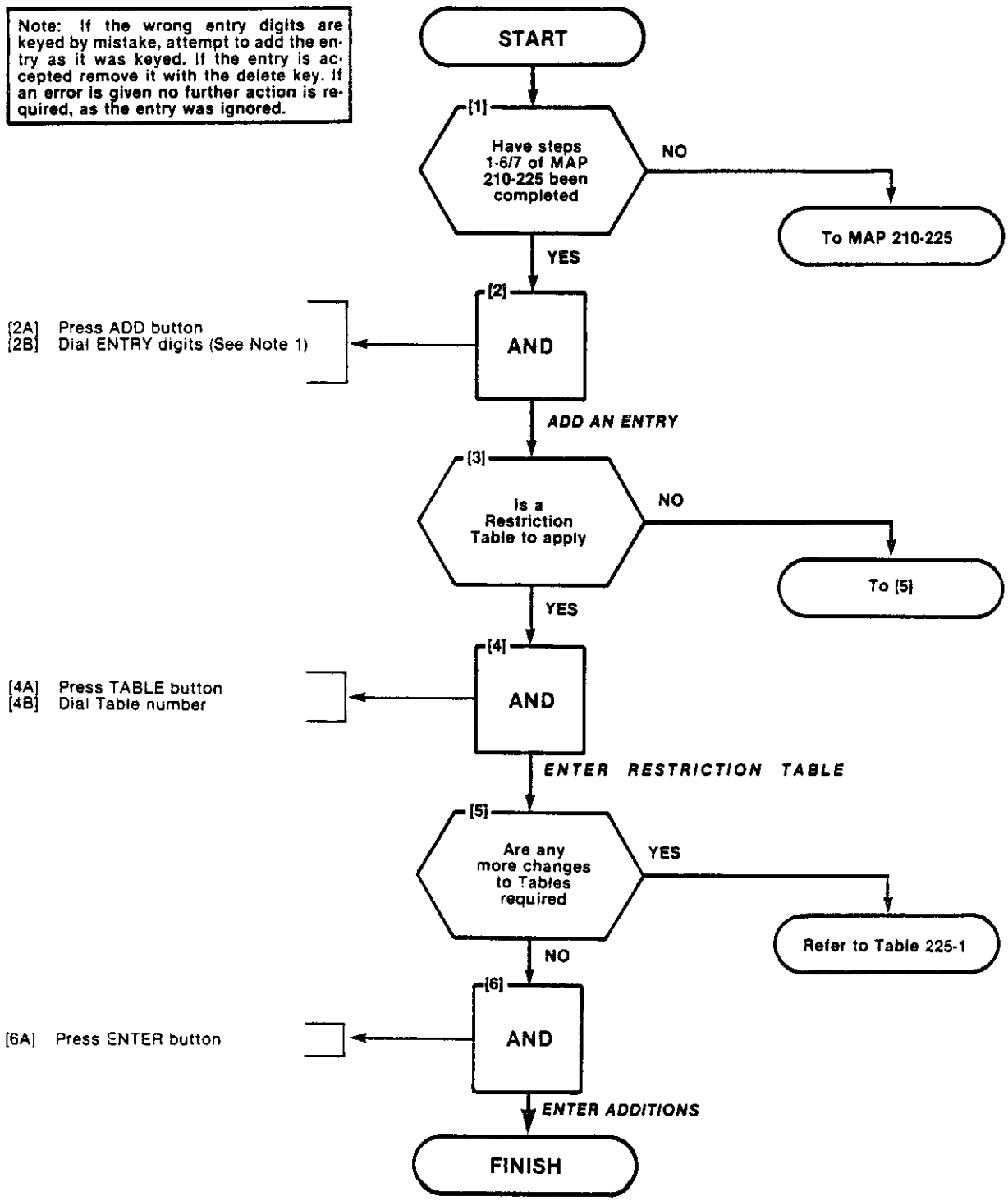

DISPLAYING SEQUENTIAL ENTRIES
MAP210-227
Issue 2, February 1982
Sheet 1 of 1

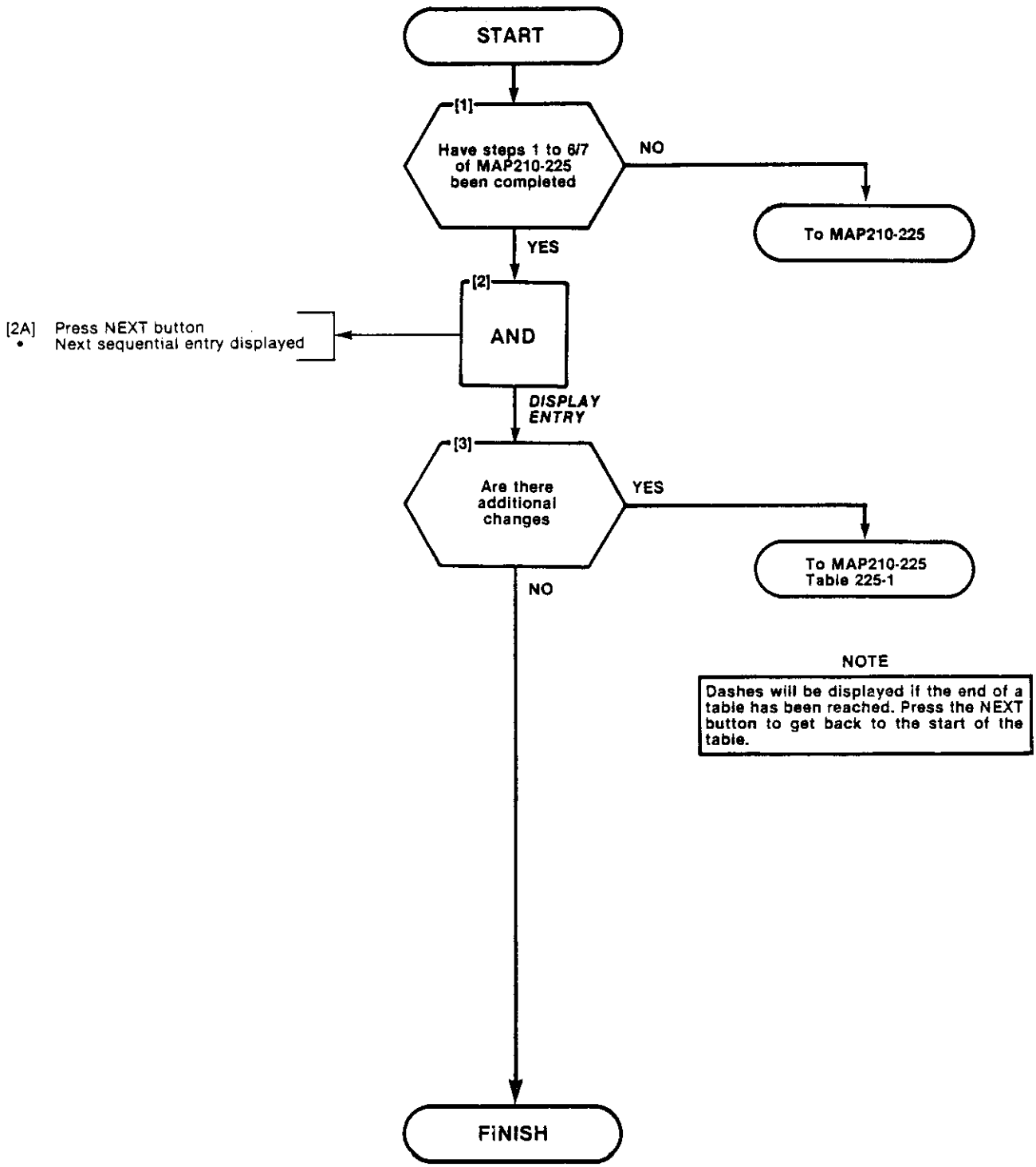

NOTE

Dashes will be displayed if the end of a table has been reached. Press the NEXT button to get back to the start of the table.

SEARCH FOR AN ENTRY
MAP210-228
Issue 2, February 1982
Sheet 1 of 1

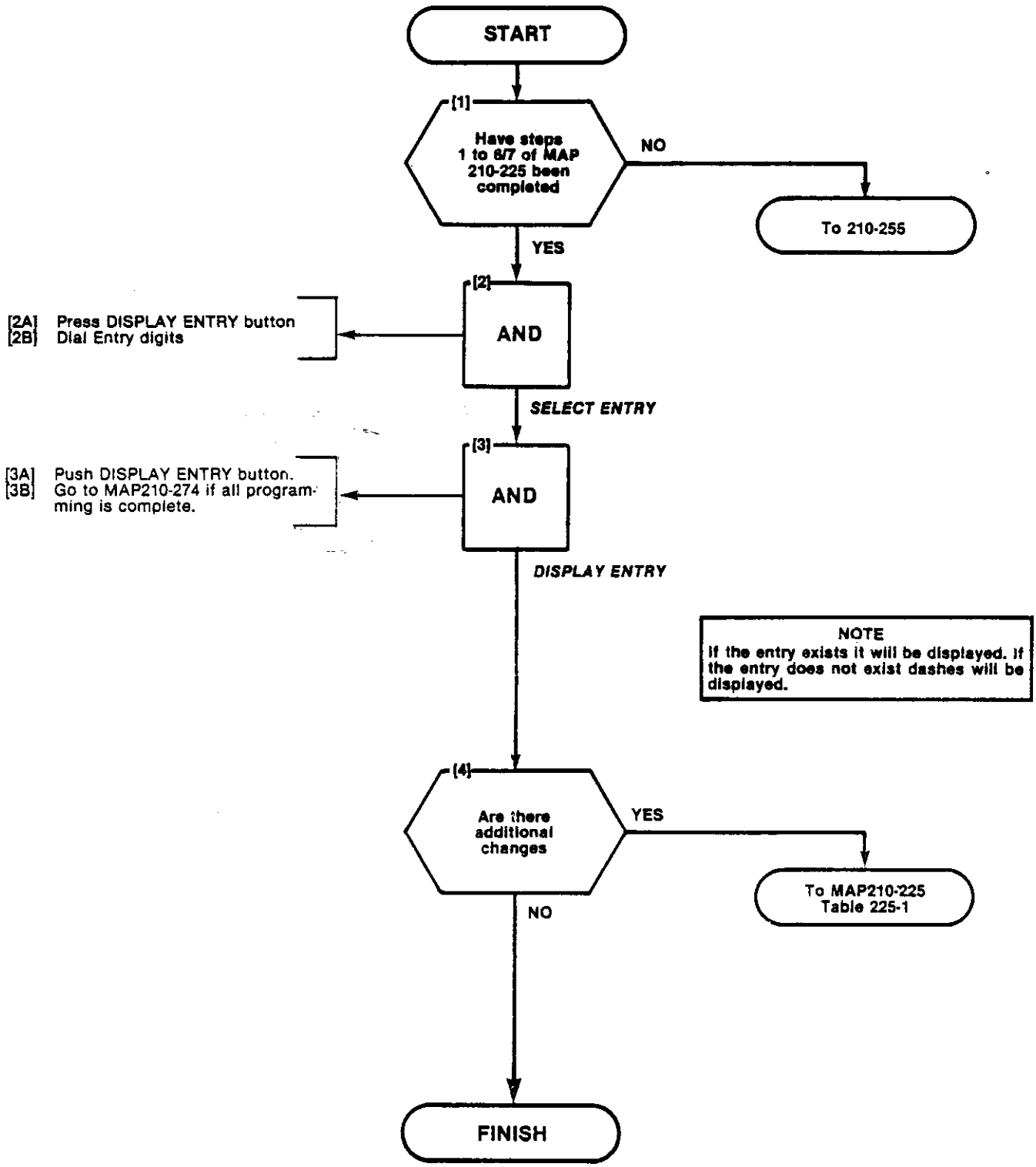

DELETE AN ENTRY
MAP210-229
Issue 2, February 1982
Sheet 1 of 1

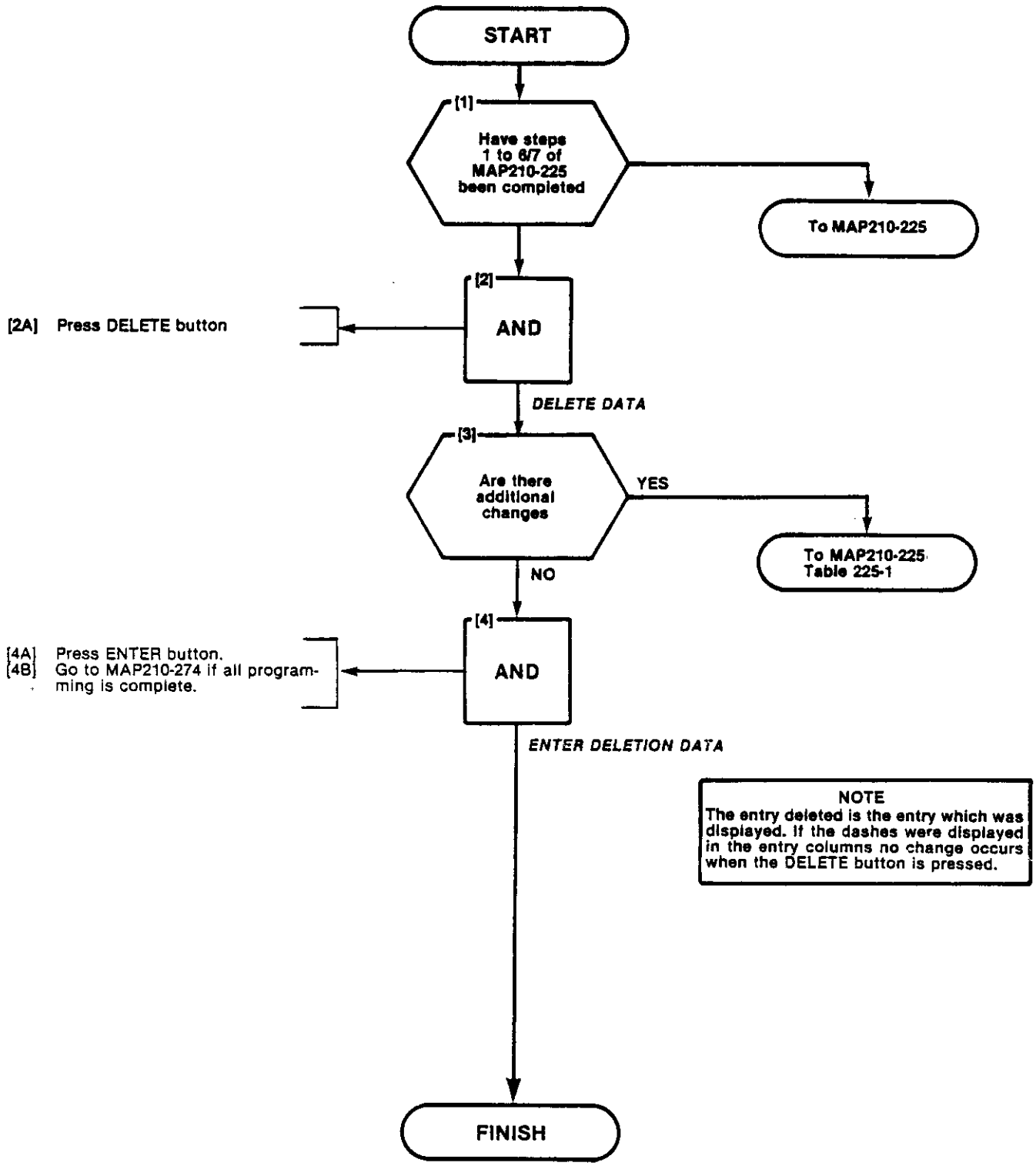

PROGRAMMING PERSONAL TABLES
MAP210-242
Issue 2, February 1982
Sheet 1 of 4

NOTES

1. Prior to making programming entries on this MAP, Form SC-2 must have been completed. The completed form is used in conjunction with the relevant steps noted in this MAP.

2. After digit entries are made (e.g. Step (4)), the bell may ring and an error code may appear in the DESTINATION display when the key in the next sequence is pressed. In this event refer to Tables 242-1 or 242-2, and repeat the sequence, i.e. the relevant function key and its digit entries, in order to correct the previous entry. Fig. 242-2 shows a typical error code entry.

TABLE 242-1

ERROR CODE	DESCRIPTION
E1	The equipment number entered is not that for a station
E3	The table number entered is not valid for the current size CONFIGURATION
E6	The CONFIGURATION (MAP210-221) entered does not include Speed Call

NOTE

The SPEED CALL LED remains lit during programming in the Speed Call mode.

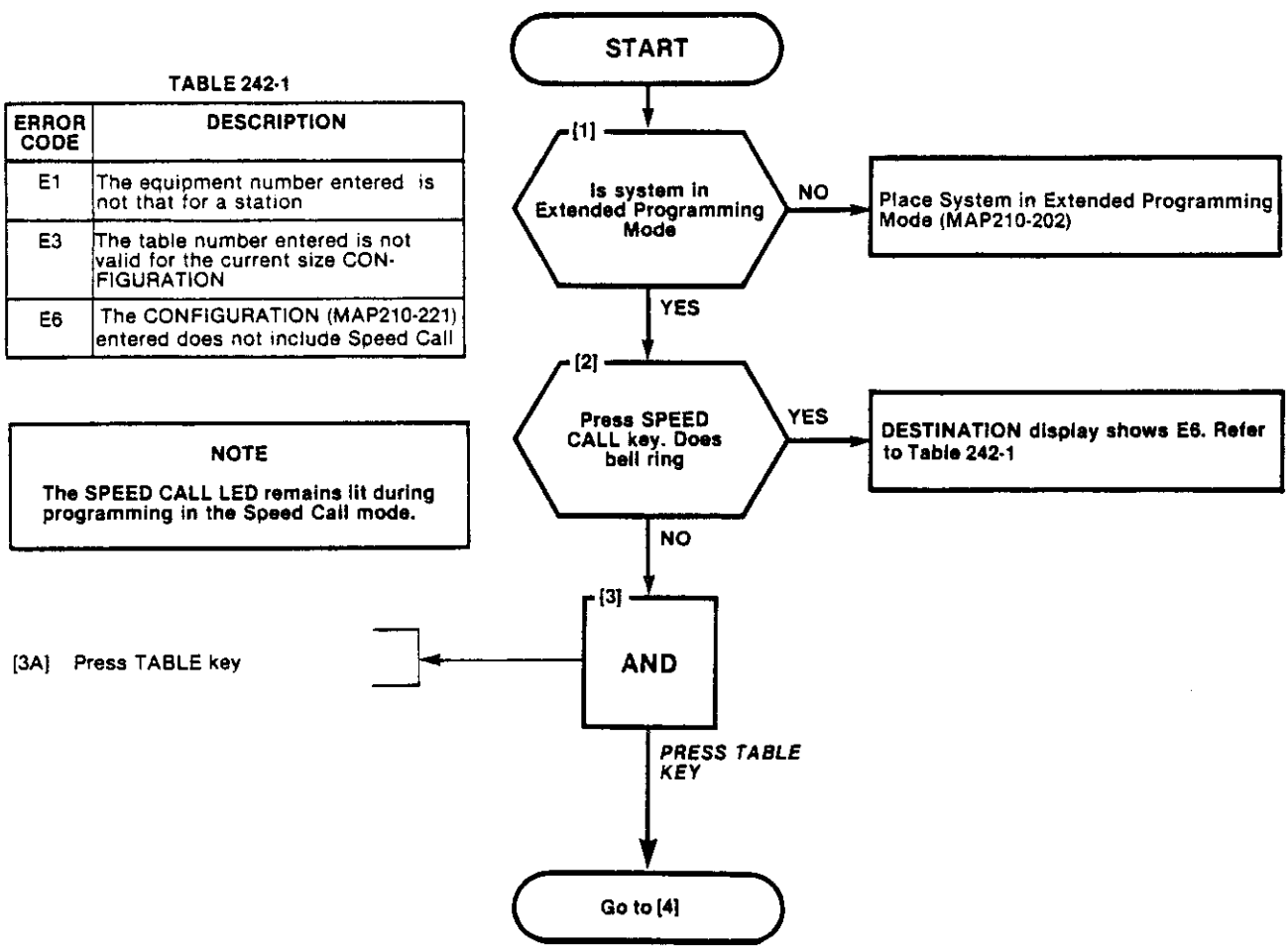

PROGRAMMING PERSONAL TABLES
MAP210-242
Issue 2. February 1982
Sheet 2 of 4

From [3]

[4] AND

[4A] Enter Table number required (See Form SC-2)
- DESTINATION display shows number entered (Fig. 242-1)
- When a subsequent key operation occurs the number is transferred to the SOURCE display and three hyphens appear as shown in Fig. 242-1)

NOTE
Error E3 (Table 242-1) may occur after a subsequent key operation. See Note 2 and Fig. 242-2

DIAL TABLE NUMBER

[5] Is a current Access Number to be changed

YES → Go to [9]

NO

[6] Is a current Number Redial code to be changed

YES → Go to [12]

NO

[7] AND

[7A] Press EQPT NUMBER key
- EQPT NUMBER LED is lit

PRESS EQPT NUMBER KEY

Go to [8]

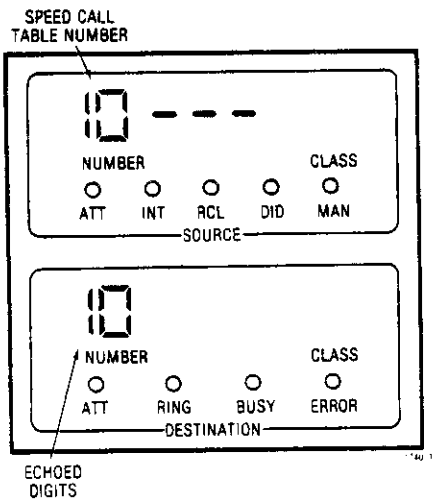

Fig. 242-1 Typical Entry Displays

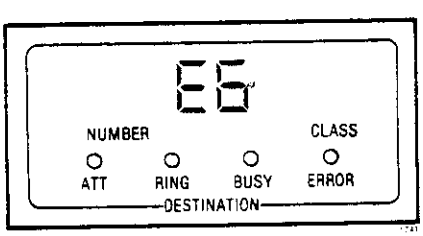

Fig. 242-2 Typical Error Code Display

PROGRAMMING PERSONAL TABLES
MAP210-242
Issue 2, February 1982
Sheet 3 of 4

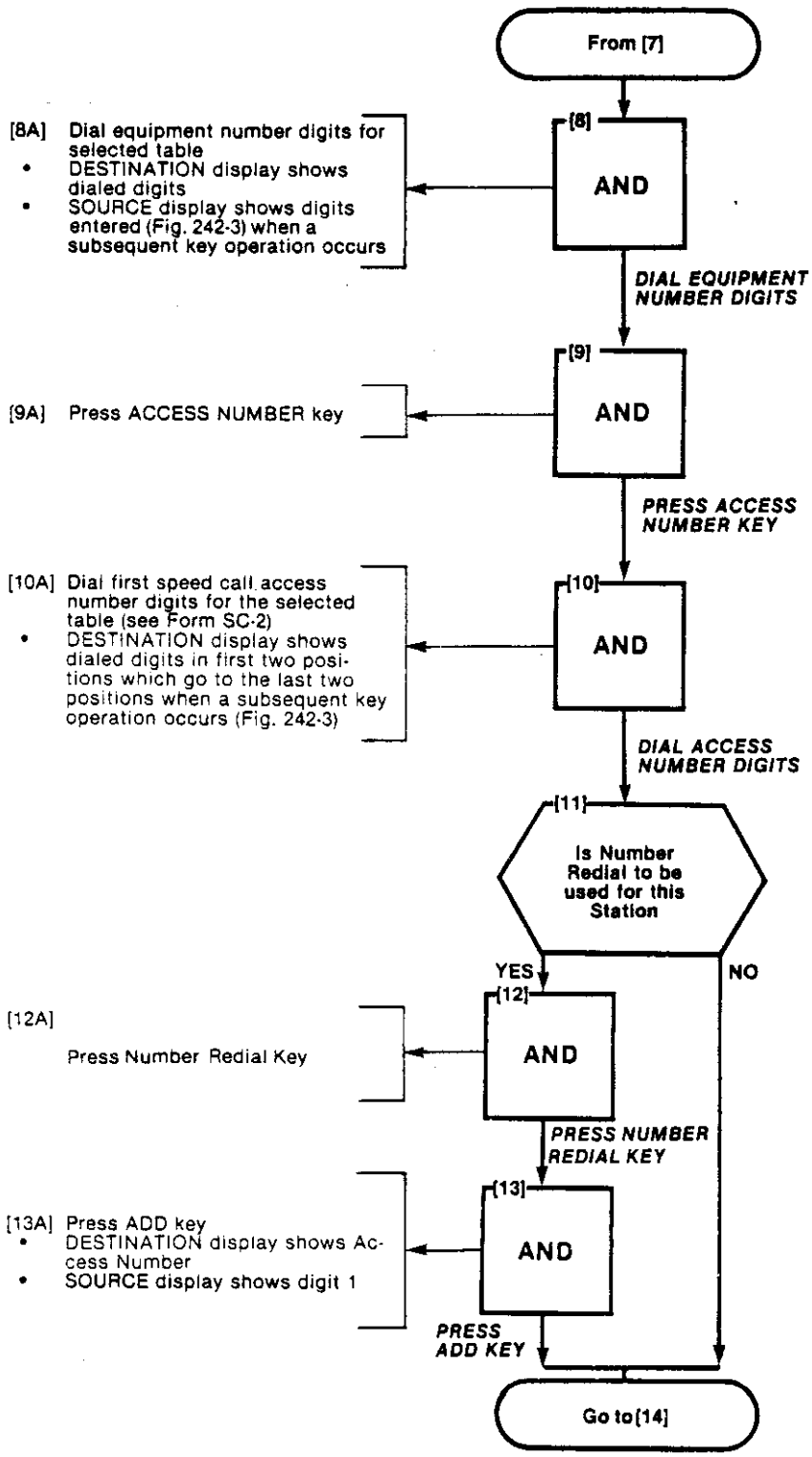

NOTE
Error E1 (Table 242-1) may occur after a subsequent key operation. See Note 2 and Fig. 242-2.

NOTE
Error E1 (Table 242-1), or Error E5 (Table 242-2) may occur after Step [10]. See Note 2 and Fig. 242-2

NOTE
Error E5 (Table 242-3) may occur after Step (13). See Note 2 and Fig. 242-2

Table 242-2

ERROR CODE	DESCRIPTION
E4	Indicates attempt to enter access number (Step 10) for a common-use table
E4	Indicates attempt made to allocate number redial digits in a common-use table (Step 12)
E5	Indicates number redial already exists for another table (Step 13) assigned to the same equipment
E5	Indicates access number (Step 10) already exists for another table assigned to the equipment

PROGRAMMING PERSONAL TABLES
MAP210-242
Issue 2, February 1982
Sheet 4 of 4

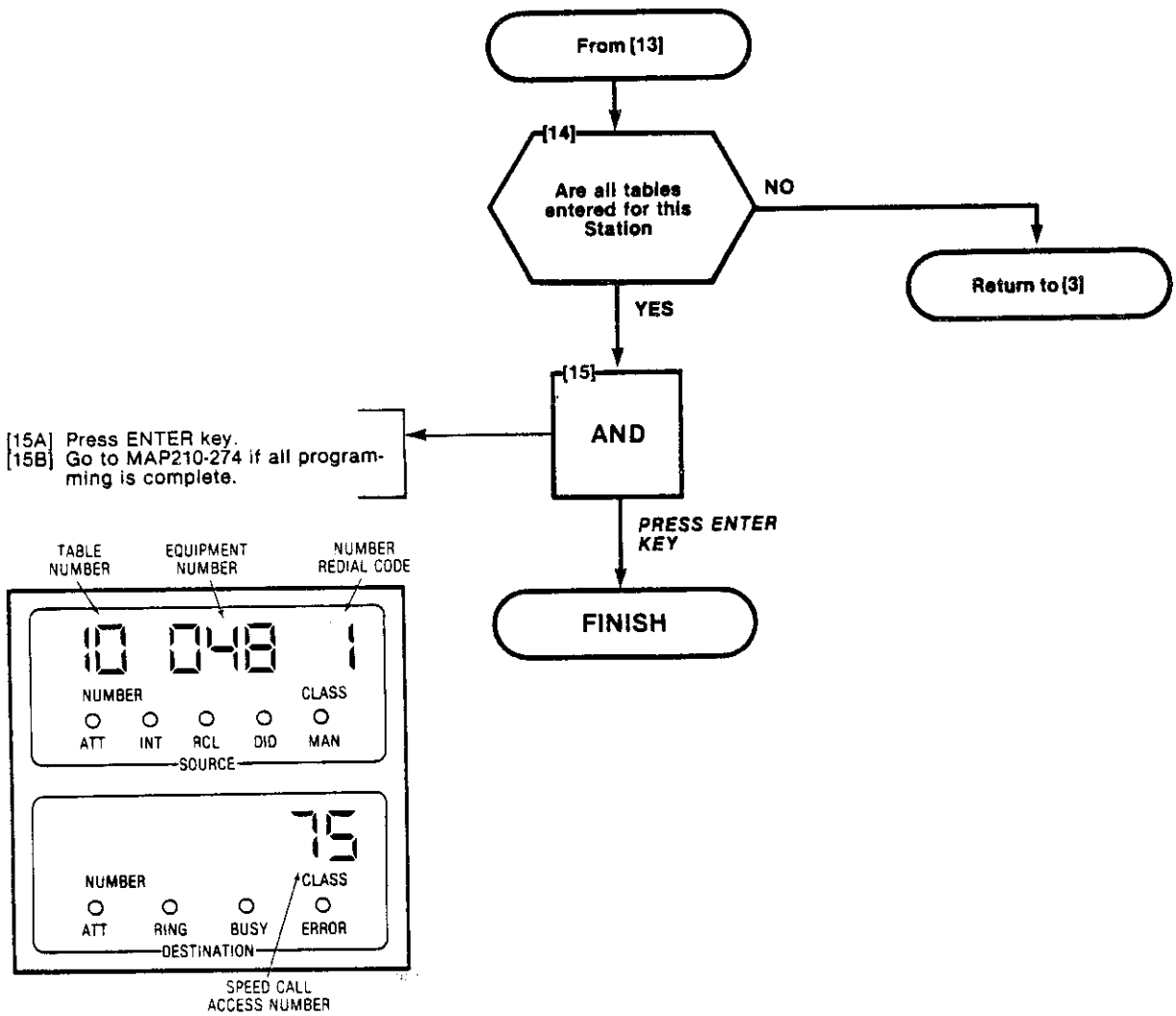

Fig. 242-3 Completed Entries Dislay

CONVERT TABLE FROM PERSONAL TO COMMON-USE
MAP210-243
Issue 2, February 1982
Sheet 1 of 2

COMMON-USE TABLES DO NOT REQUIRE PROGRAMMING. THIS MAP IS THE PROCEDURE USED TO CONVERT A PERSONAL TABLE TO A COMM-USE TABLE.

NOTES

1. Prior to making programming entries on this MAP, Form SC-2 must have been completed. The completed form is used in conjunction with the relevant steps noted in this MAP.

2. After digit entries are made (e.g. Step (4)), the bell may ring and an error code may appear in the DESTINATION display when the key in the next sequence is pressed. In this event refer to Table 243-1, and repeat the sequence, i.e. the relevant function key and its digit entries, in order to correct the previous entry. Fig. 243-2 shows a typical error code entry.

TABLE 243-1

ERROR CODE	DESCRIPTION
E3	The table number entered is not valid for the current size CONFIGURATION
E6	The CONFIGURATION (MAP210-221) entered does not include Speed Call

NOTE

The SPEED CALL LED remains lit during programming in the Speed Call Mode.

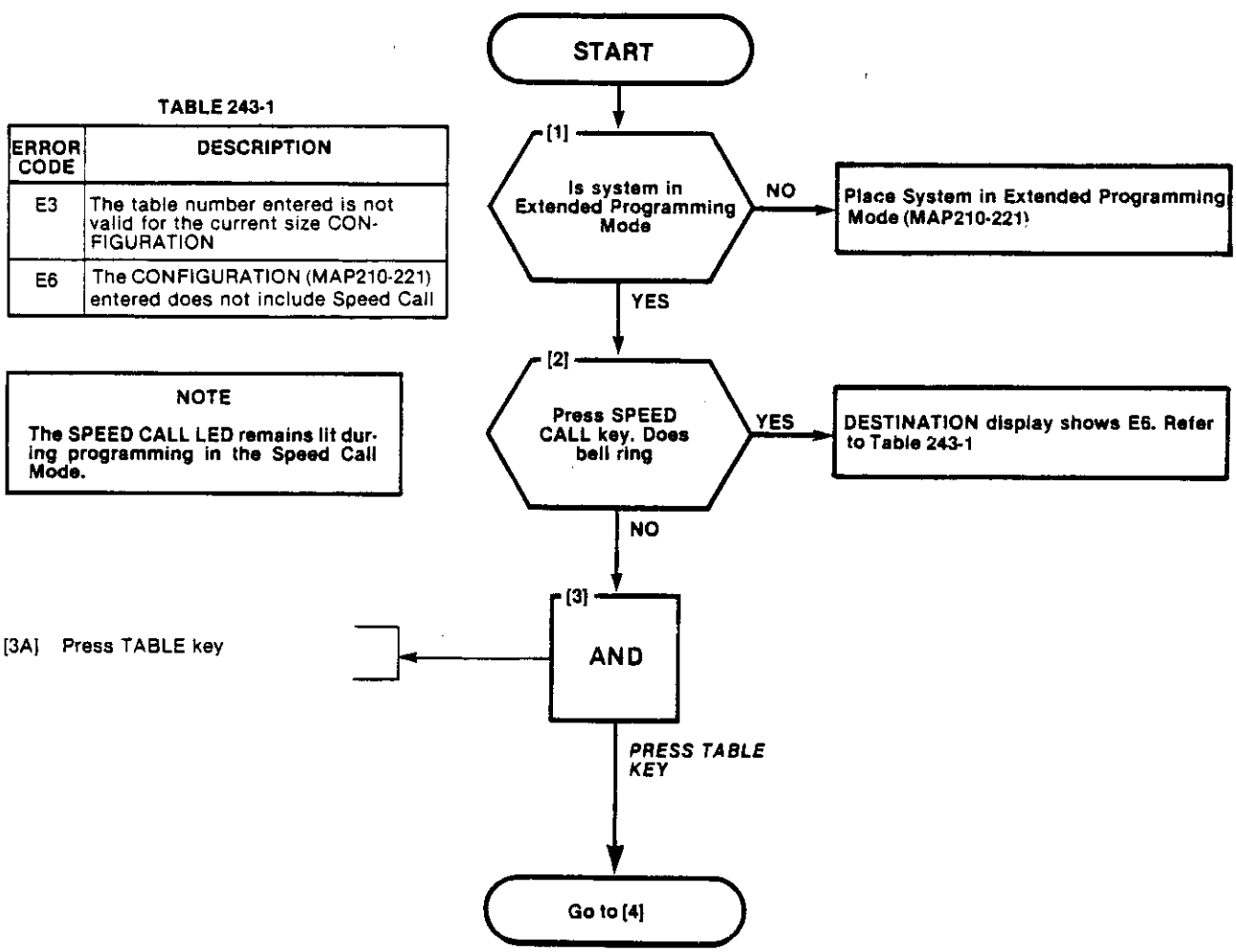

CONVERT TABLE FROM PERSONAL TO COMMON-USE
MAP210-243
Issue 2, February 1982
Sheet 2 of 2

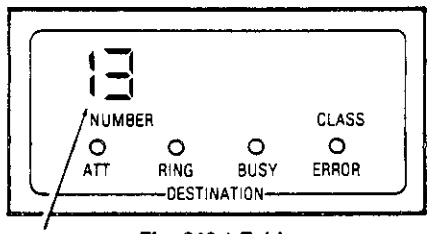

Fig. 243-1 Table Number Display

From [3]

[4] AND

[4A] Enter Table number required (See Form SC-2)
- DESTINATION display shows number entered (Fig. 243-1).

DIAL TABLE NUMBER

[5] AND

[5A] Press EQPT NUMBER key
- SOURCE display shows the data associated with the table (Fig. 243-1)
- DESTINATION display shows the first access number of the table, and the table number (Step 4) disappears

PRESS EQPT NUMBER KEY

[6] AND

[6A] Press DELETE key
- SOURCE display shows Table number (Fig. 243-4), and three hyphens (indicating table is now common-use)

PRESS DELETE KEY

[7] Are other Tables to be entered

YES → Return to [3]

NO

[8] AND

[8A] Press ENTER key
[8B] Go to Map 210-274 if all programming is complete

PRESS ENTER KEY

FINISH

NOTE

Error E3 (Table 003-1) may occur after Step (4). See Note 2 and Fig. 243-3

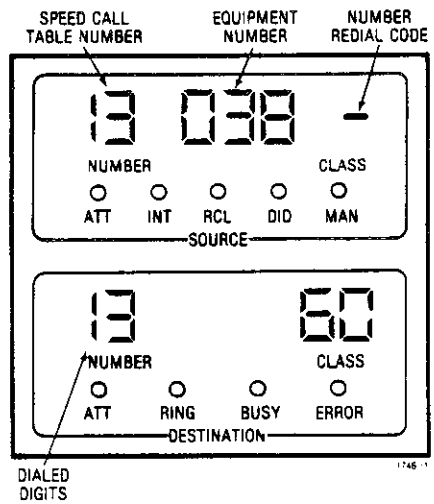

Fig. 243-2 Typical Entry Displays

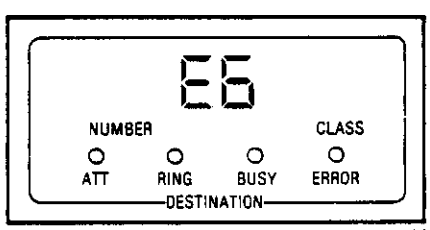

Fig. 243-3 Typical Error Code Display

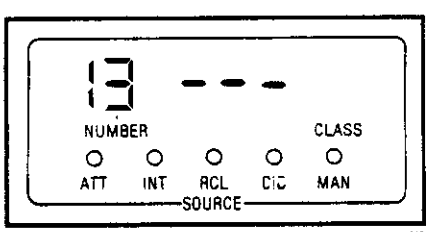

Fig. 243-4 Completed Entry Display

CODE TABLE QUANTITY SELECTION OR CHANGE
MAP210-250
Issue 2, February 1982
Sheet 1 of 1

Fig. 250-1

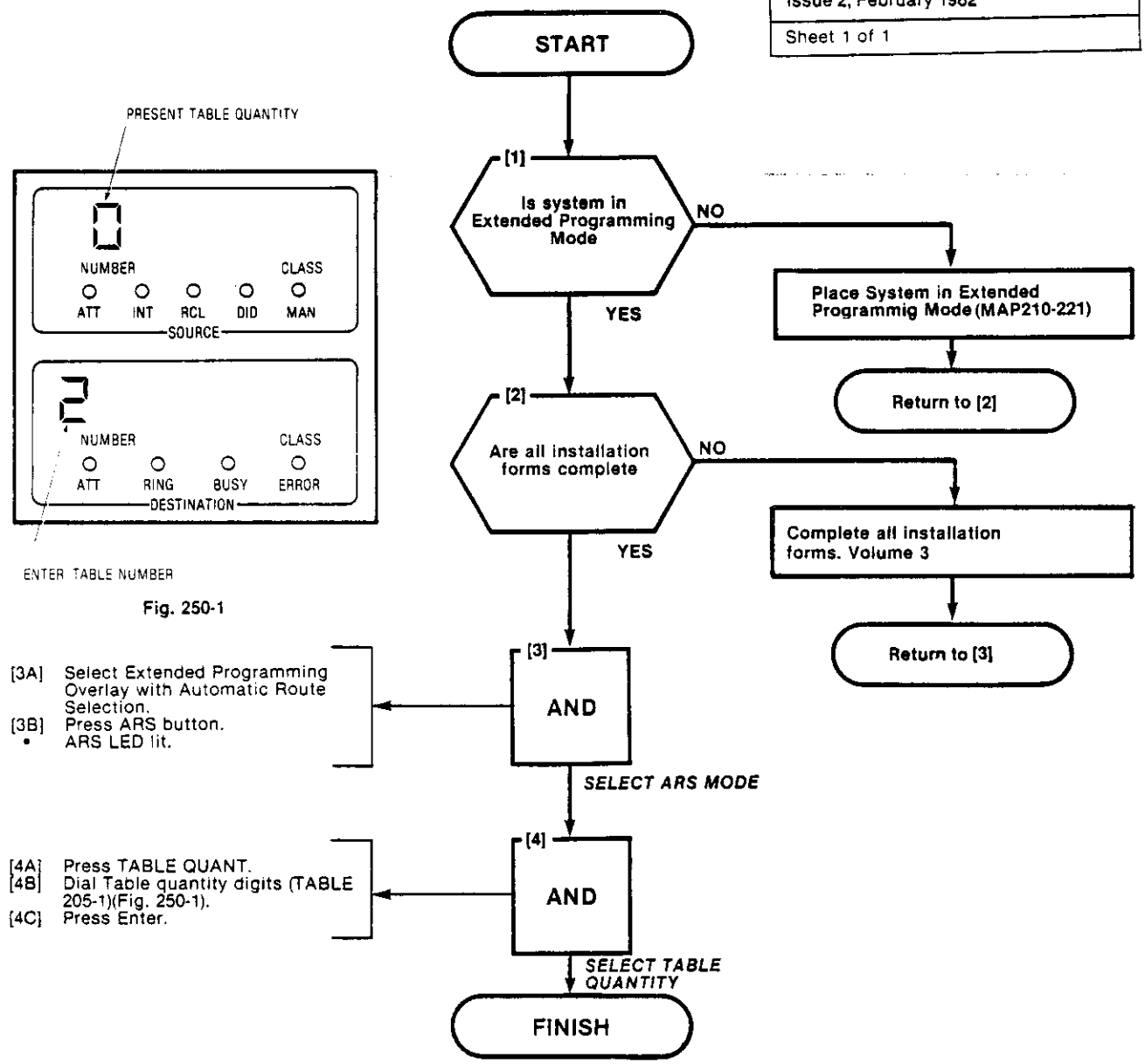

TABLE 250-1

TABLE QUANTITY

Configuration Selected	Permissable Dialed Digits	Type of ARS Table
1	1 to 7	ARS 1 Basic
2	1 to 7	ARS 1 Basic
3	1 to 7	ARS 1 Basic
4	1 to 7	ARS 1 Basic
5	1 to 12	ARS 2 Standard
6	1 to 22	ARS 3 Extended
7	1 to 7	ARS 1 Basic

AREA CODE TABLE PROGRAMMING
MAP210-251
Issue 2, February 1982
Sheet 1 of 2

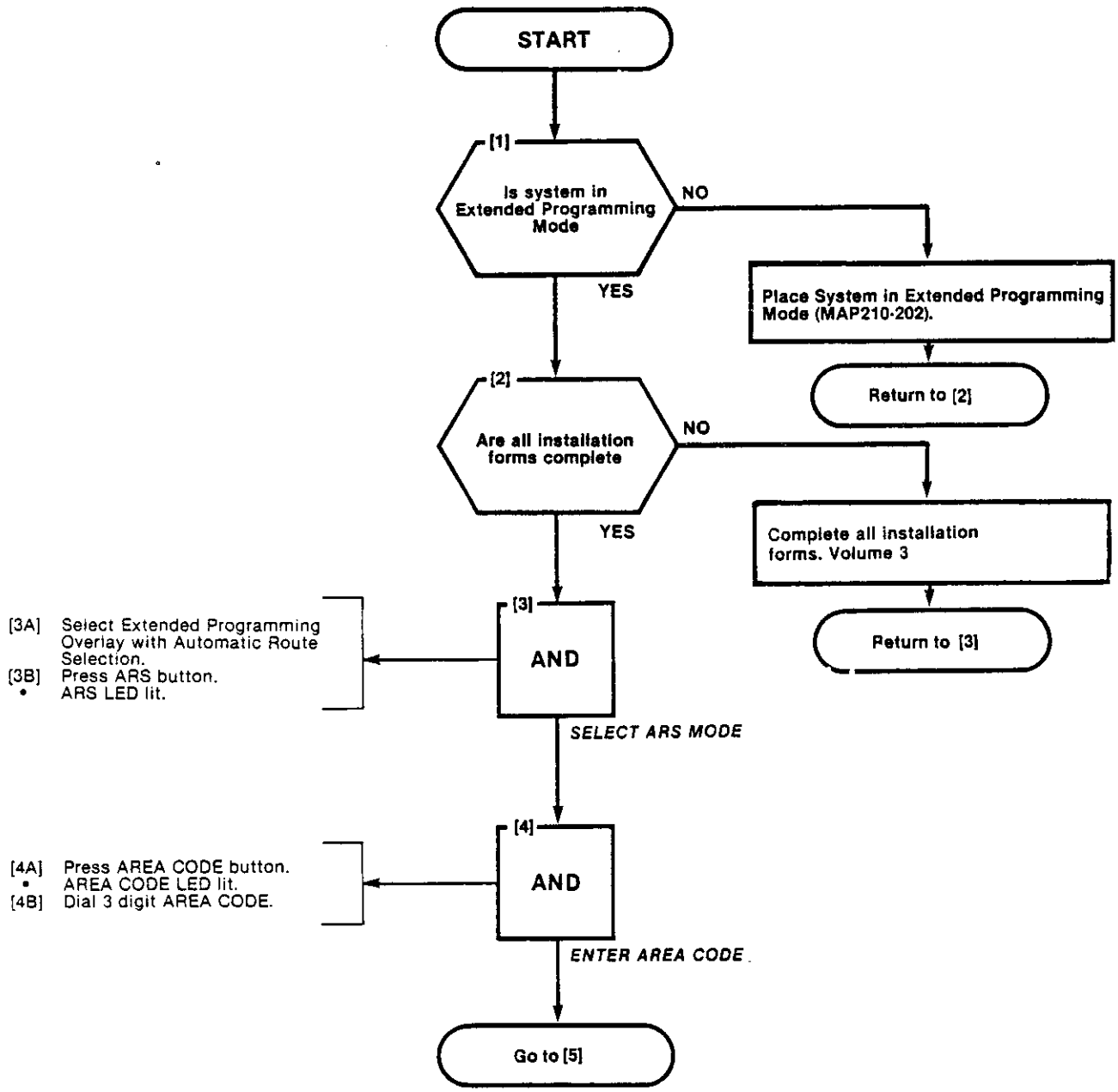

AREA CODE TABLE PROGRAMMING
MAP210-251
Issue 2, February 1982
Sheet 2 of 2

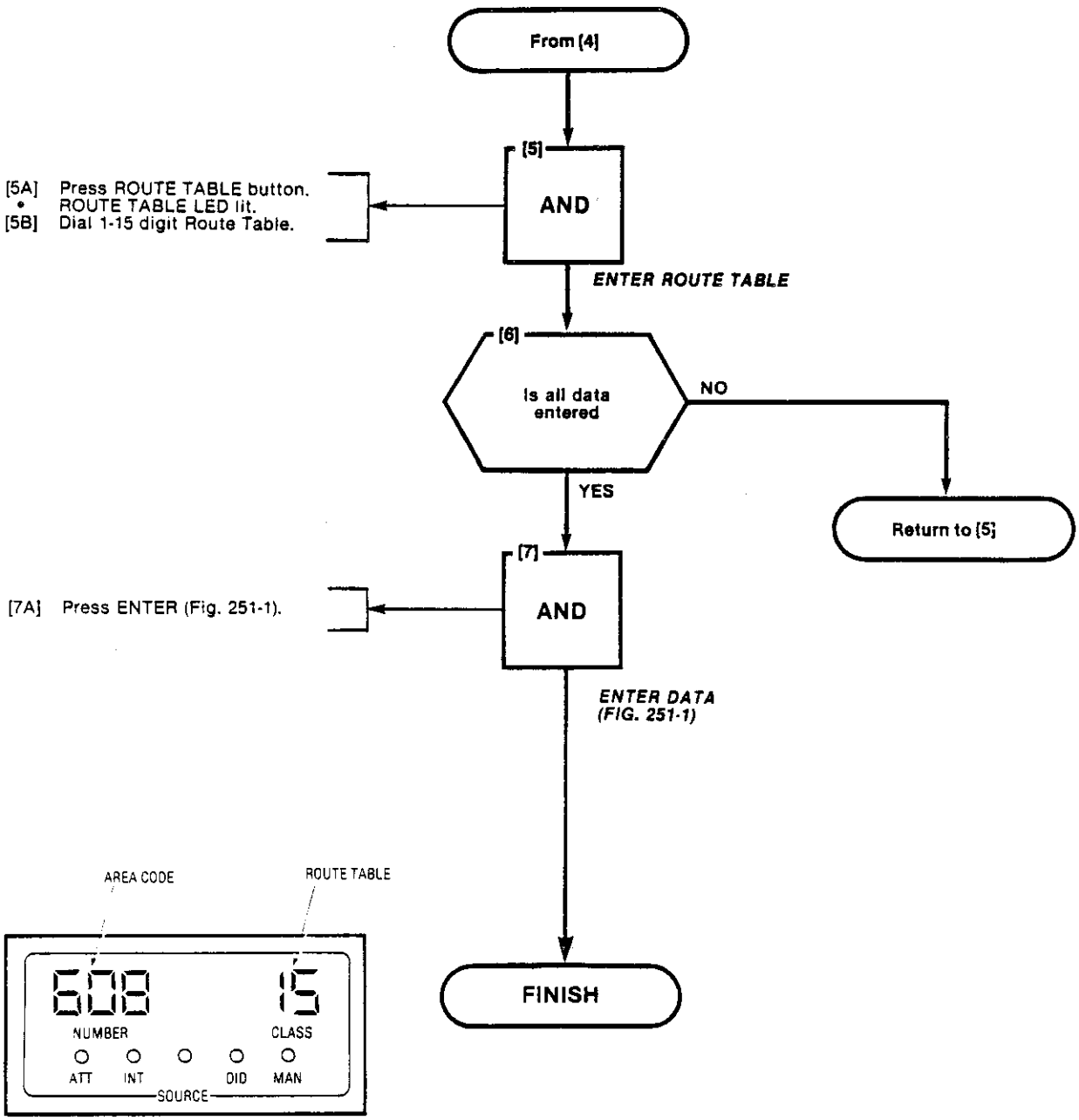

Fig. 251-1 Area Code and Route Table

REVIEW AREA CODE TABLE PROGRAMMING
MAP210-252
Issue 2, February 1982
Sheet 1 of 2

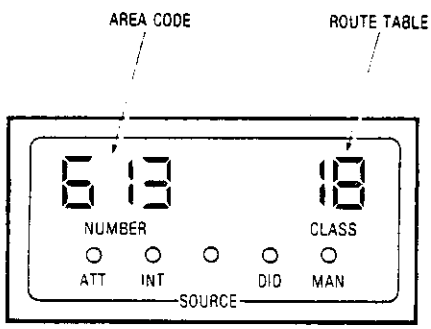

Fig. 252-1
Area Code Table

START

[1] Is system in Extended Progamming Mode

NO

Place System in Extended Programming Mode (MAP210-202).

Return to [2]

YES

[2] Are all installation forms complete

NO

Complete all installation forms. Volume 3

Return to [3]

YES

[3] AND

[3A] Select Extended Programming Overlay with Automatic Route Selection.
[3B] Press ARS button.
• ARS LED lit.

SELECT ARS MODE

[4] AND

[4A] Press AREA CODE button.
• AREA CODE LED lit.
[4B] Dial 3 digit Area Code.

SELECT AREA CODE

Go to [5]

REVIEW AREA CODE TABLE PROGRAMMING
MAP210-252
Issue 2, February 1982
Sheet 2 of 2

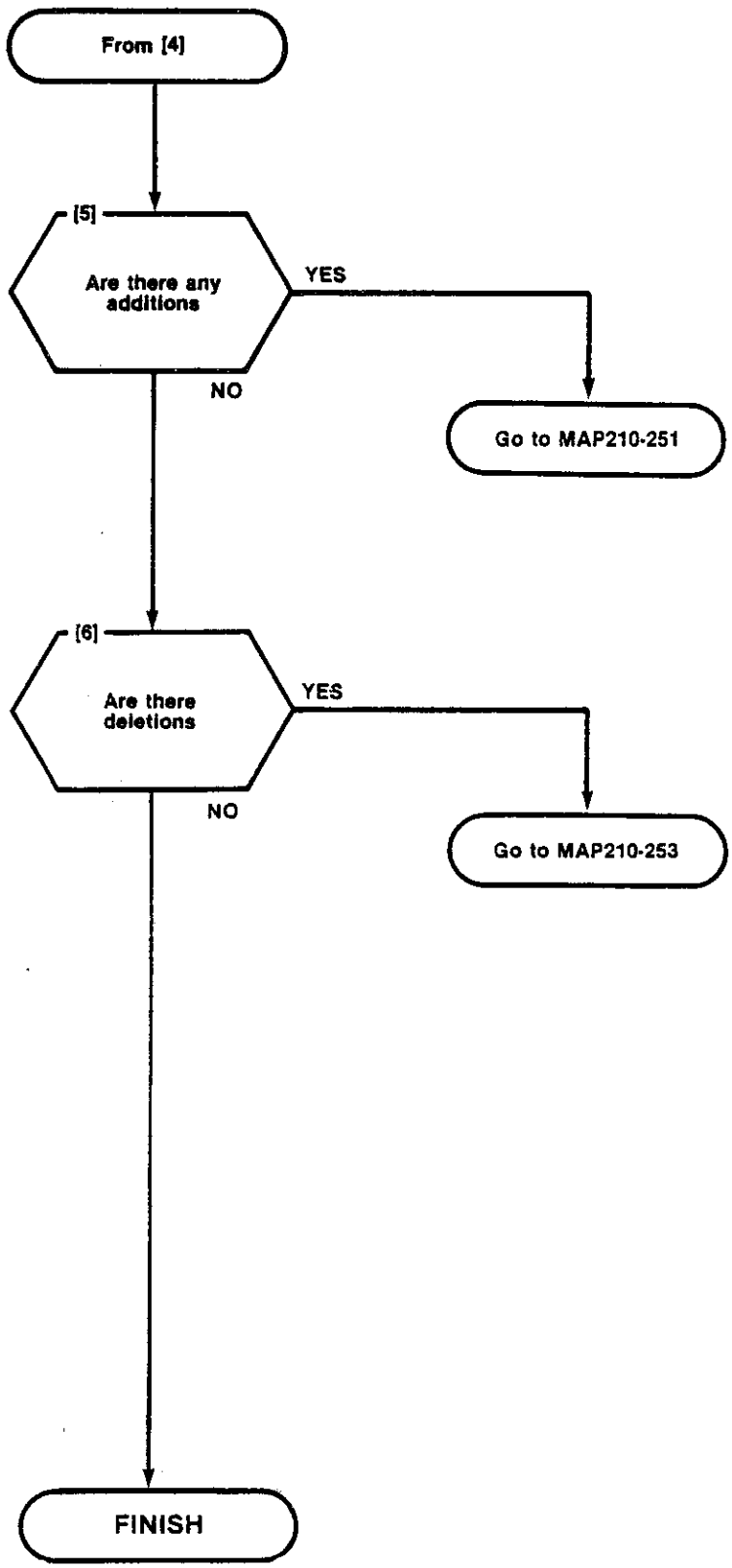

DELETE AN AREA CODE TABLE
MAP210-253
Issue 2, February 1982
Sheet 1 of 2

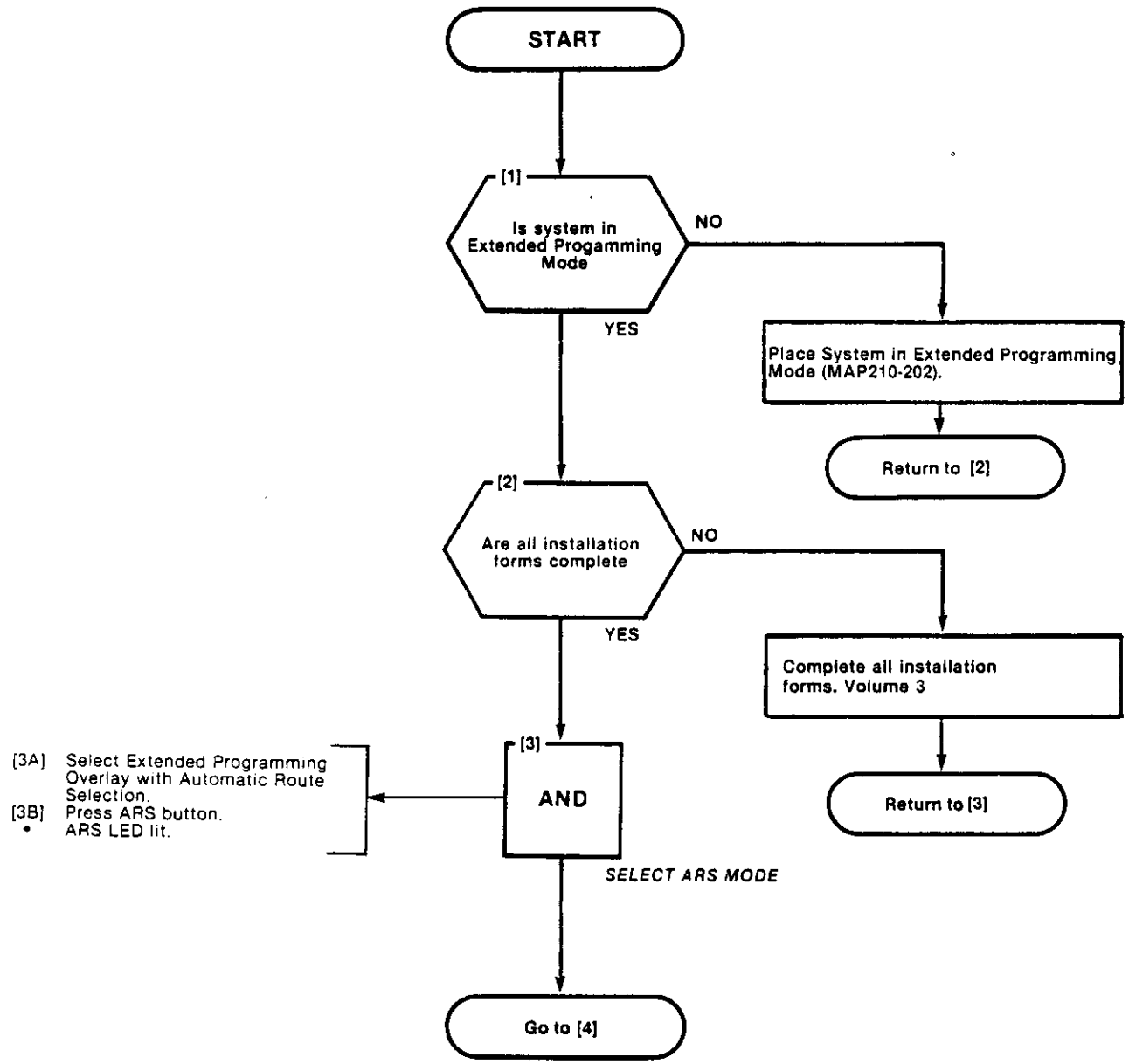

DELETE AN AREA CODE TABLE
MAP210-253
Issue 2, February 1982
Sheet 2 of 2

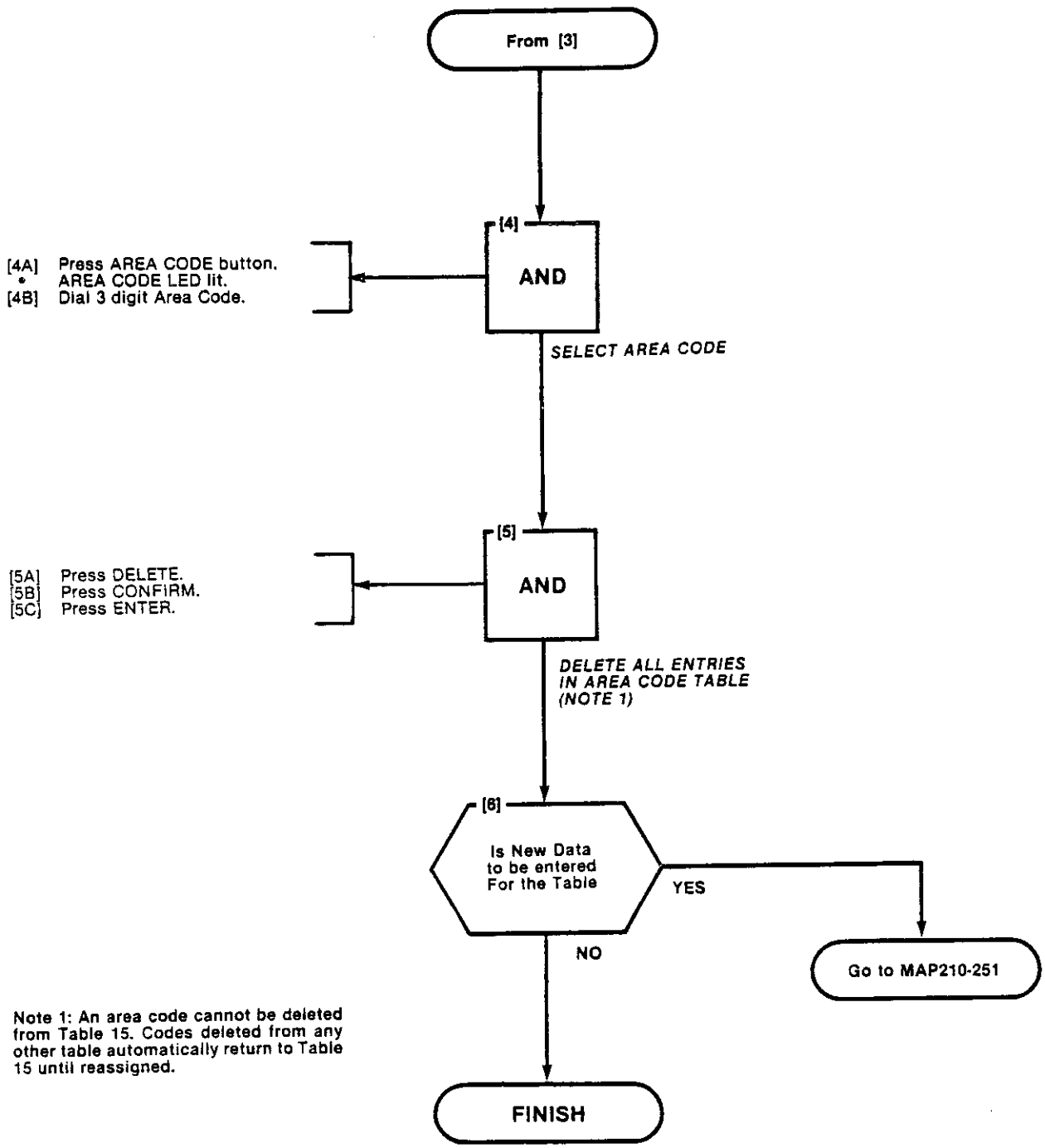

Note 1: An area code cannot be deleted from Table 15. Codes deleted from any other table automatically return to Table 15 until reassigned.

AREA CODE/OFFICE CODE PROGRAMMING
MAP210-254
Issue 2, February 1982
Sheet 1 of 4

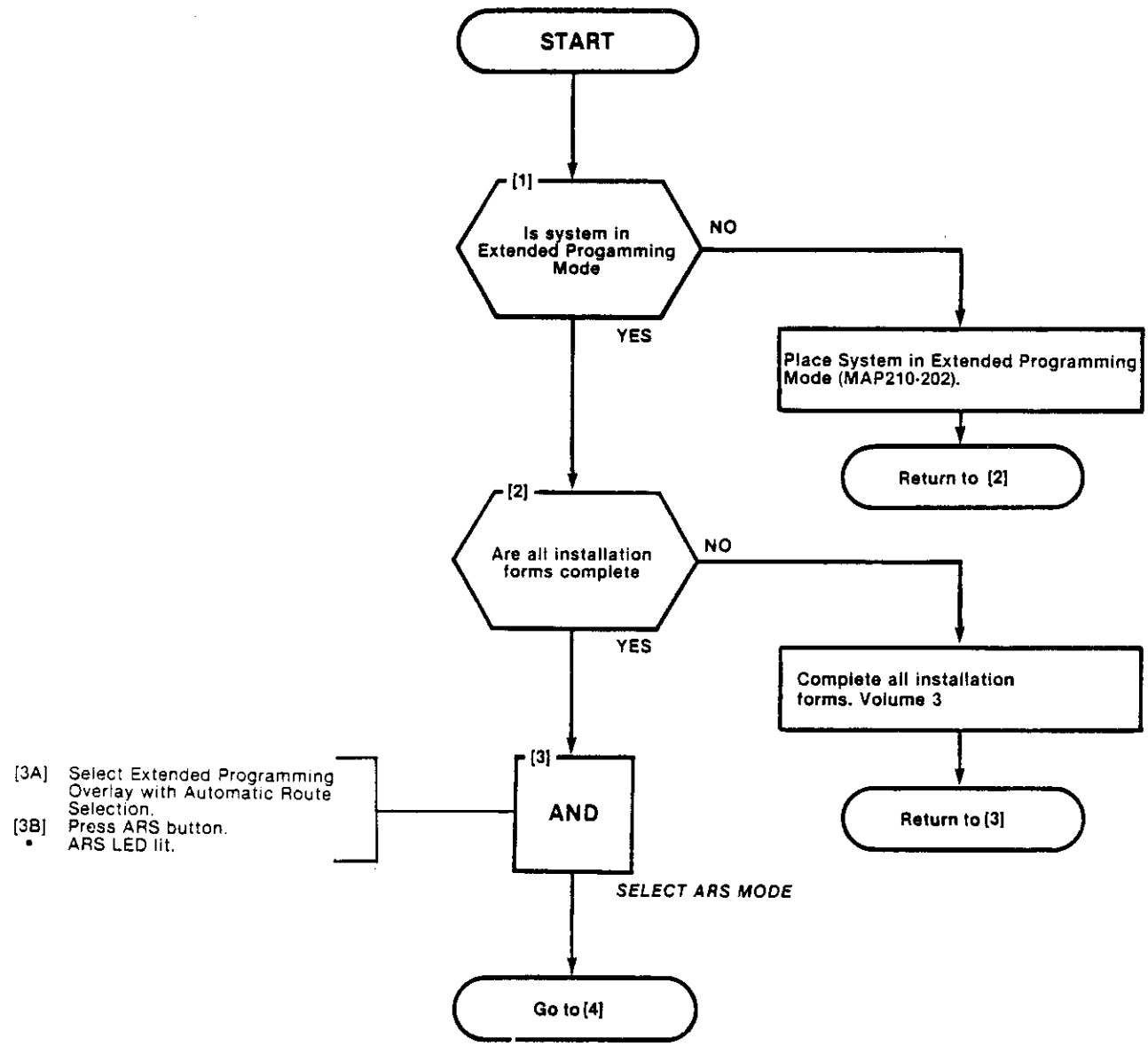

AREA CODE/OFFICE CODE PROGRAMMING
MAP210-254
Issue 2, February 1982
Sheet 2 of 4

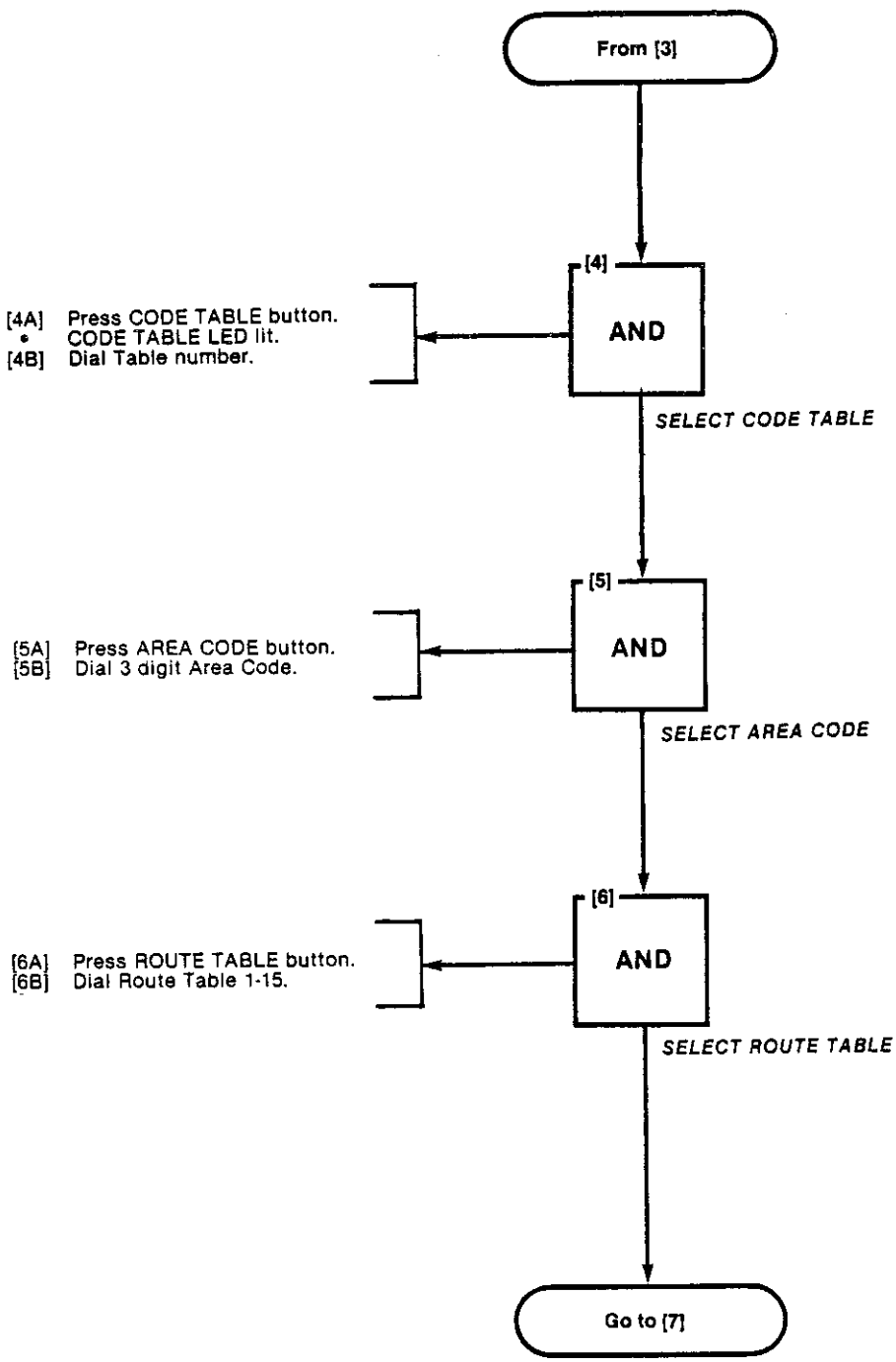

AREA CODE/OFFICE CODE PROGRAMMING
MAP210-254
Issue 2, February 1982
Sheet 3 of 4

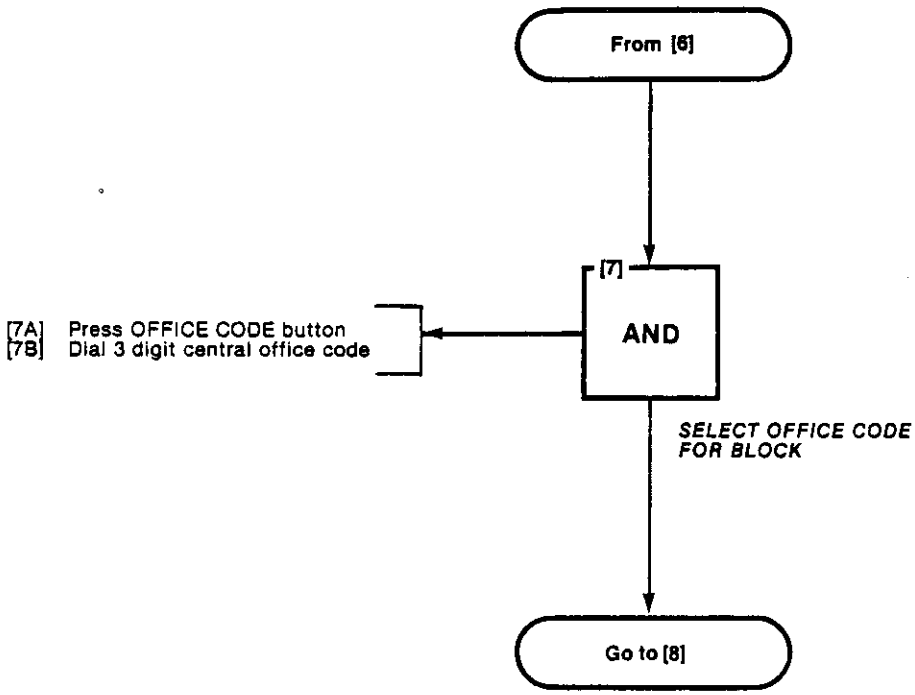

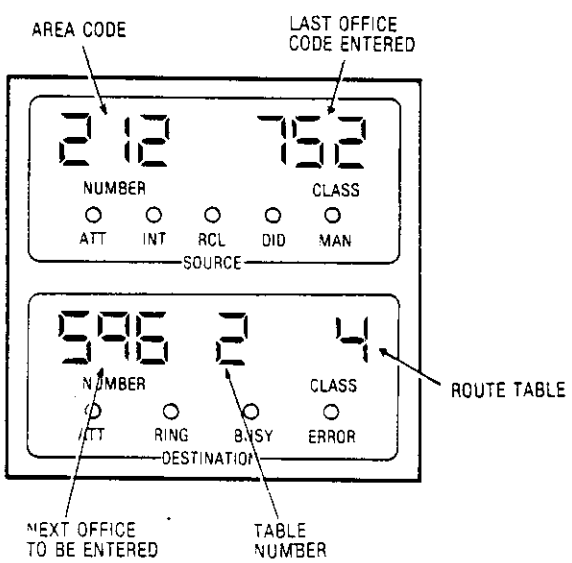

Fig. 254-1

AREA CODE/OFFICE CODE PROGRAMMING
MAP210-254
Issue 2, February 1982
Sheet 4 of 4

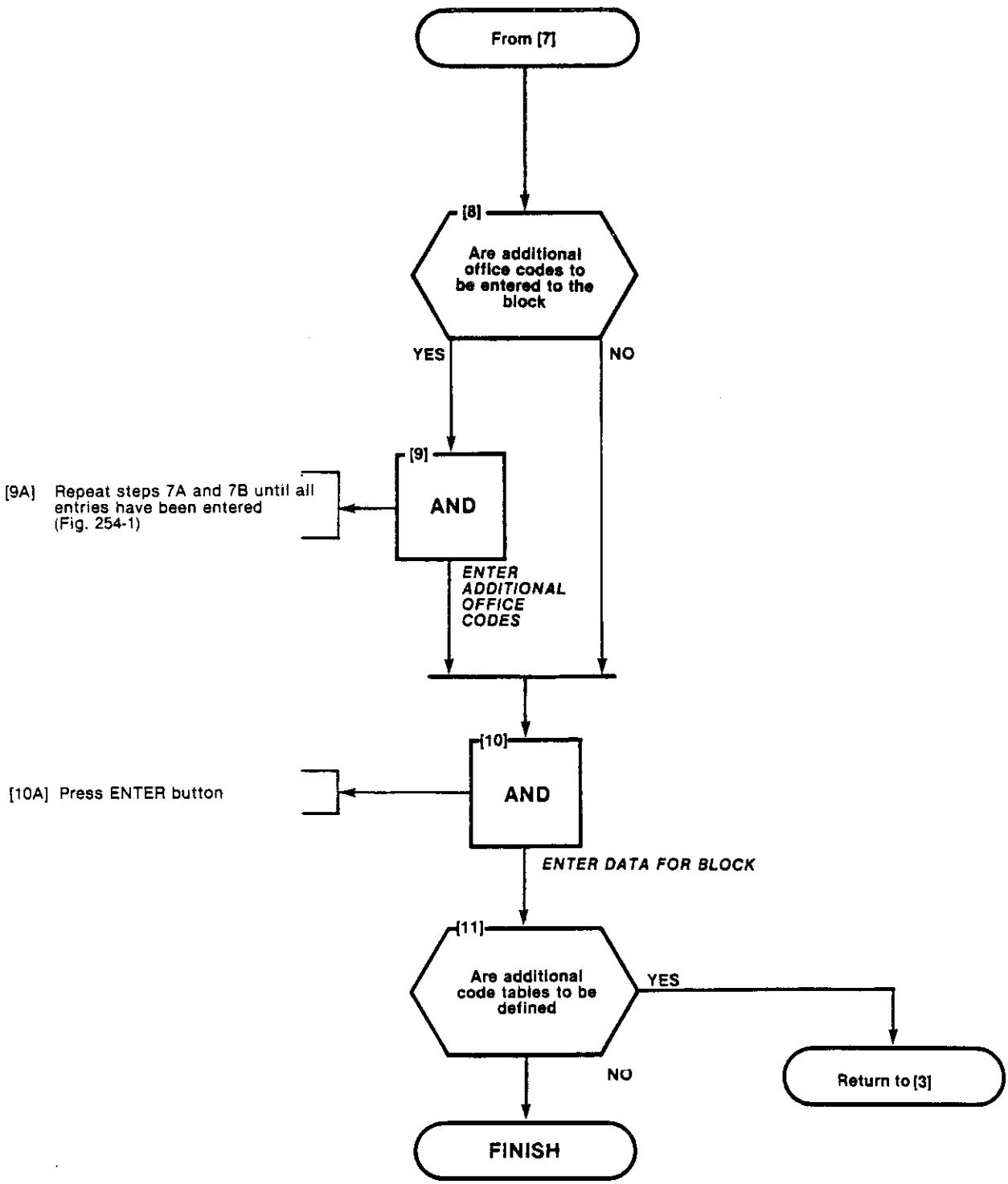

REVIEW OR DELETE PART OR ALL AREA CODE/OFFICE CODE
MAP210-255
Issue 2, February 1982
Sheet 1 of 3

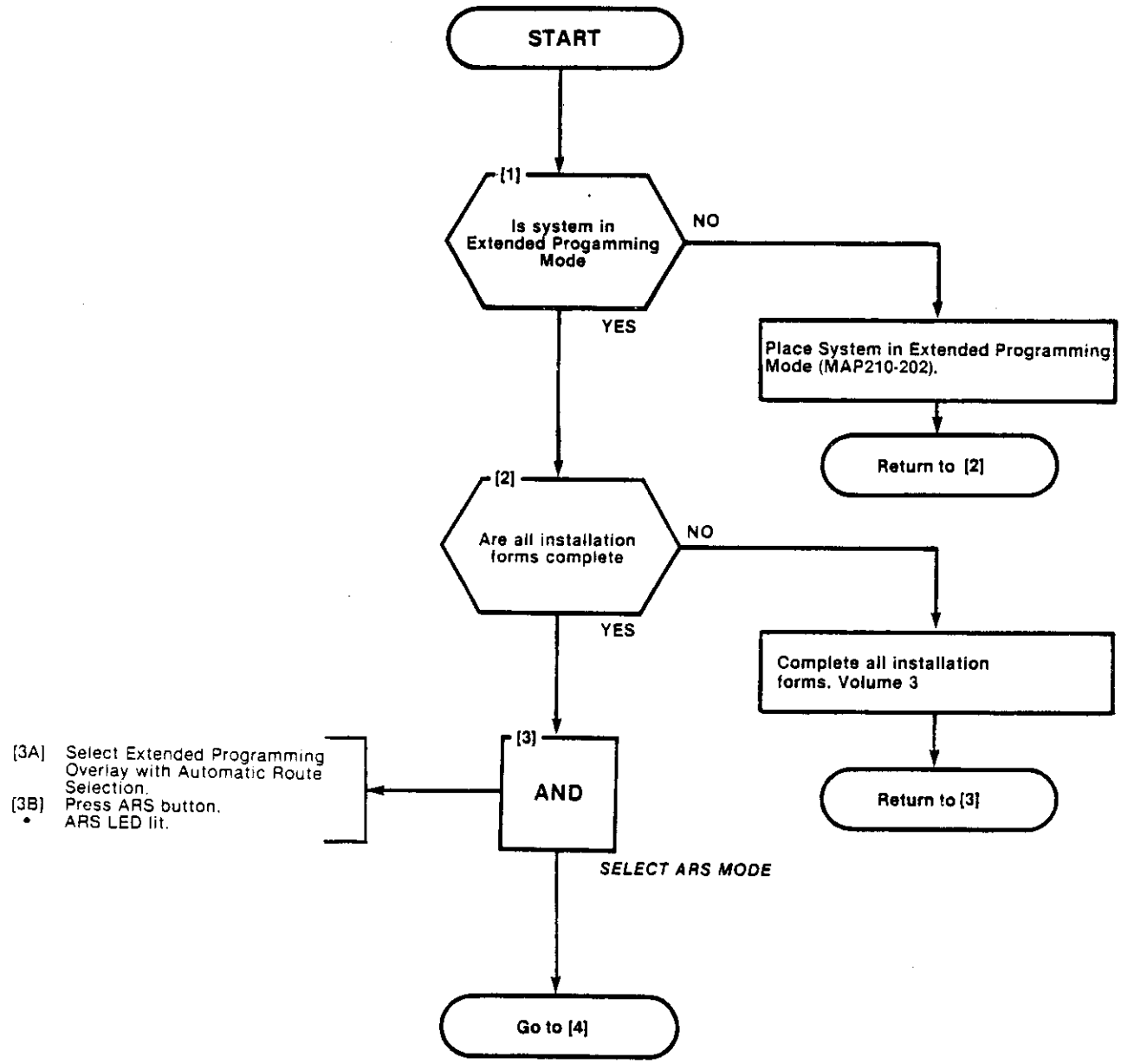

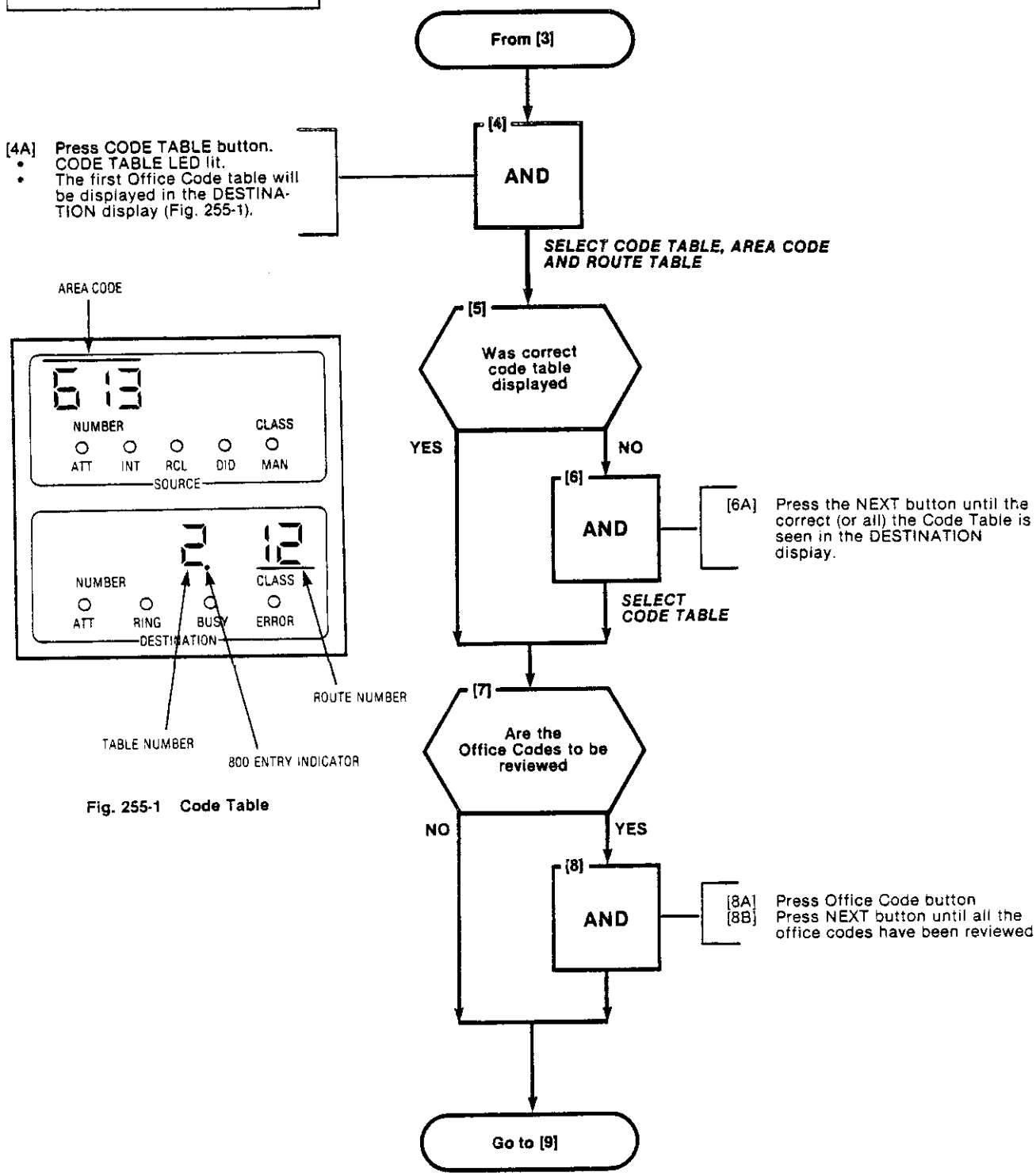

Fig. 255-1 Code Table

REVIEW OR DELETE PART OR ALL AREA CODE/OFFICE CODE
MAP210-255
Issue 2, February 1982
Sheet 3 of 3

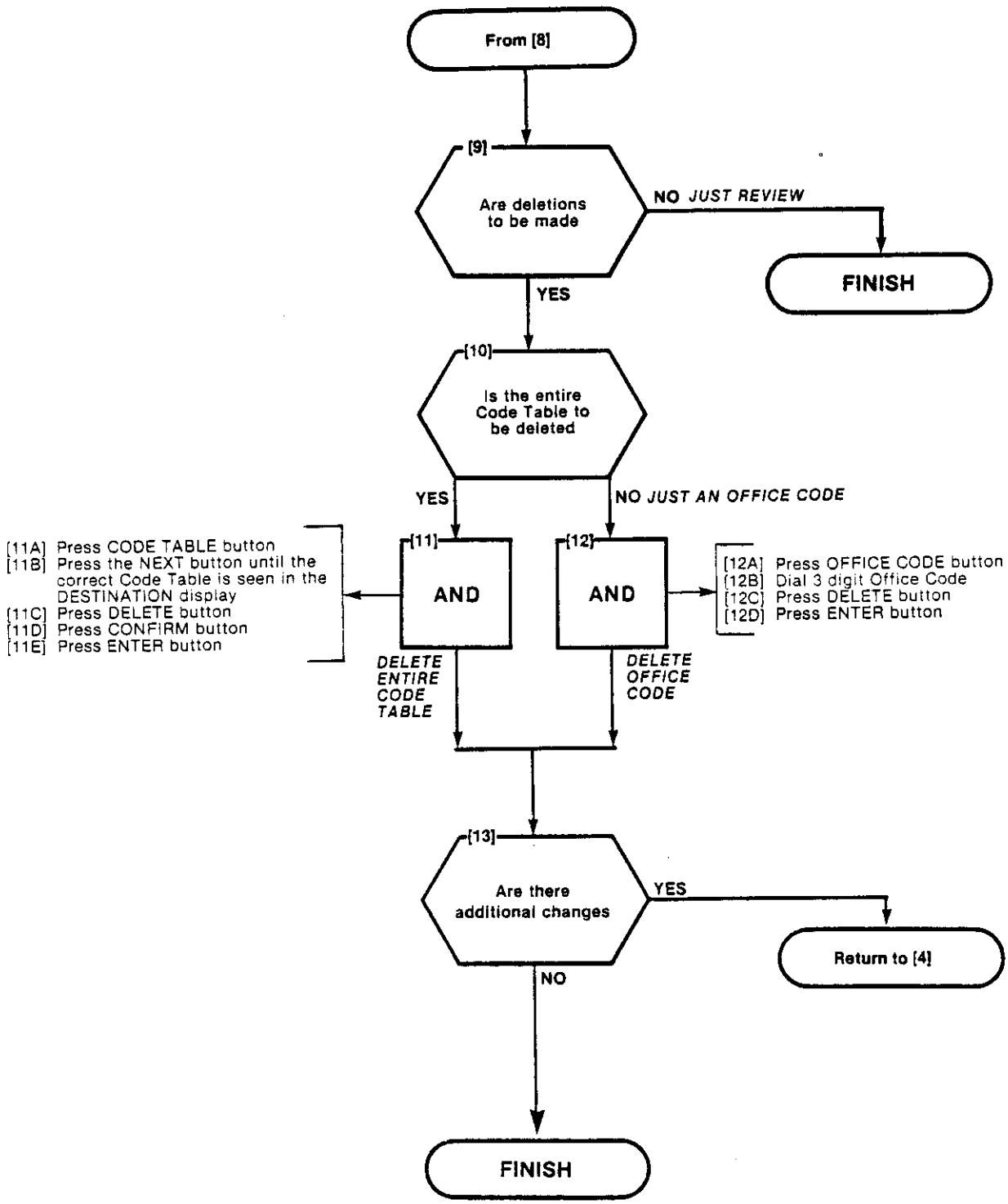

PROGRAM MODIFY DIGITS
MAP210-256
Issue 2, February 1982
Sheet 1 of 2

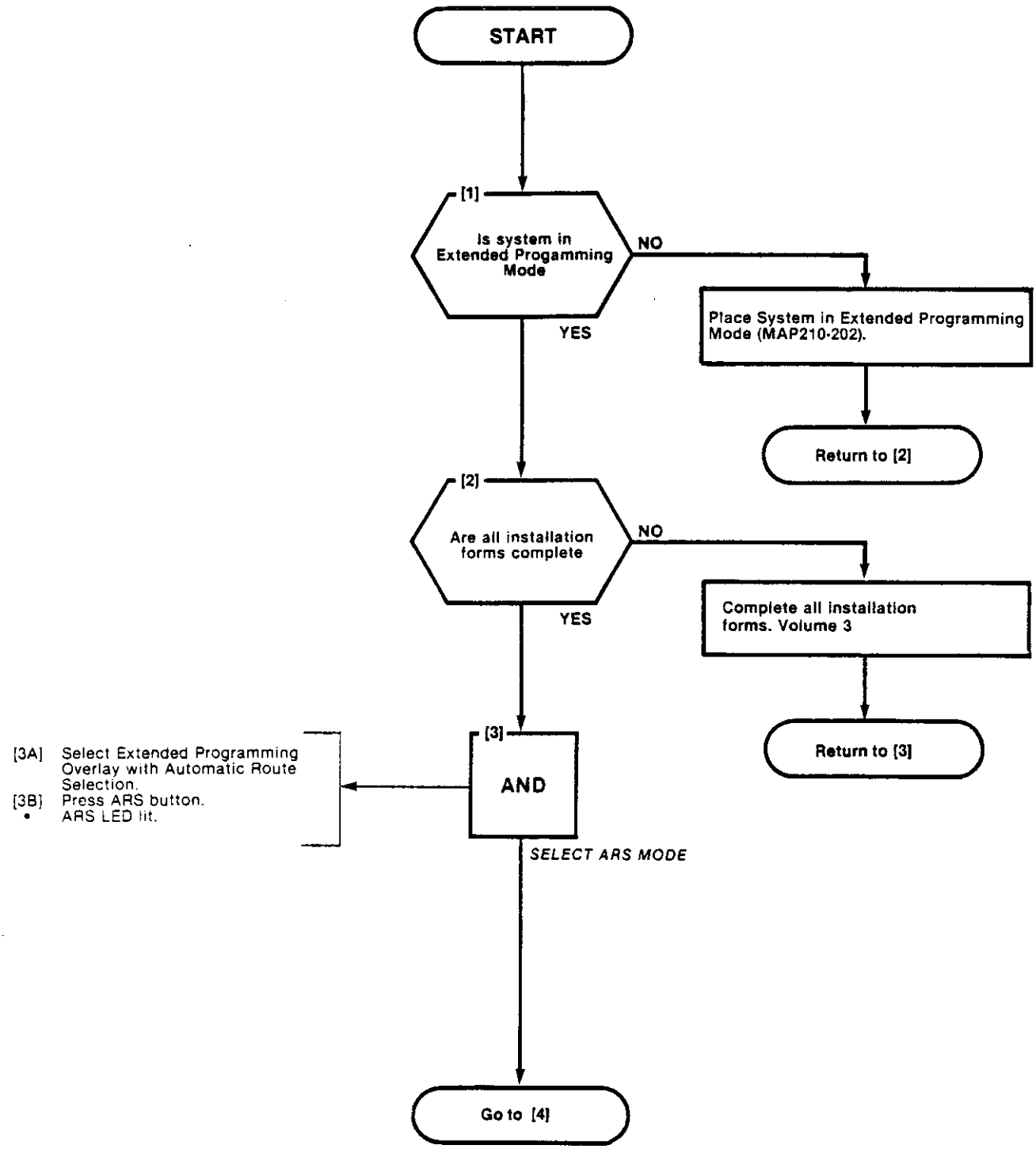

PROGRAM MODIFY DIGITS
MAP210-256
Issue 2, February 1982
Sheet 2 of 2

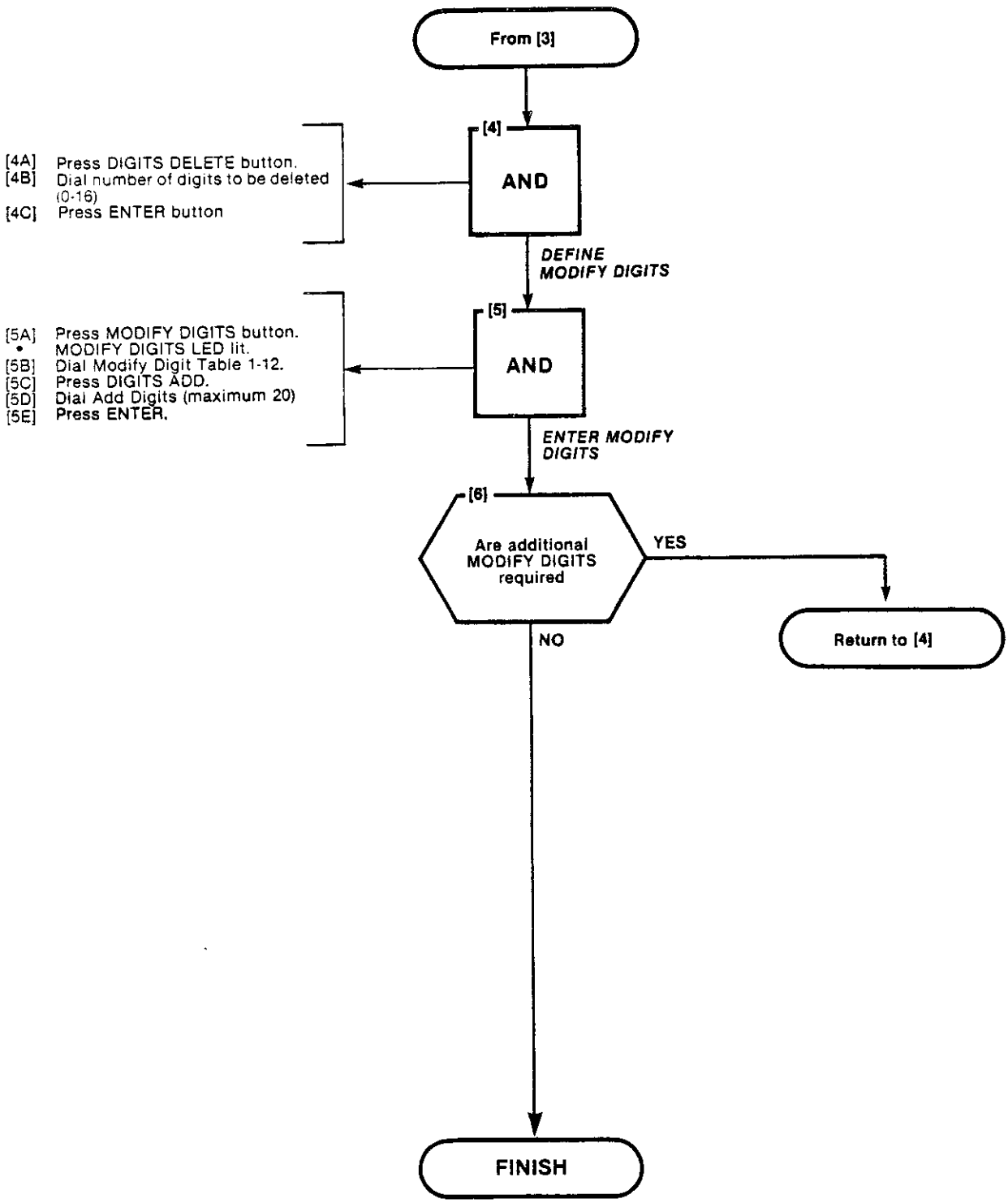

TO REVIEW OR DELETE MODIFY DIGIT TABLES
MAP210-257
Issue 2, February 1982
Sheet 1 of 4

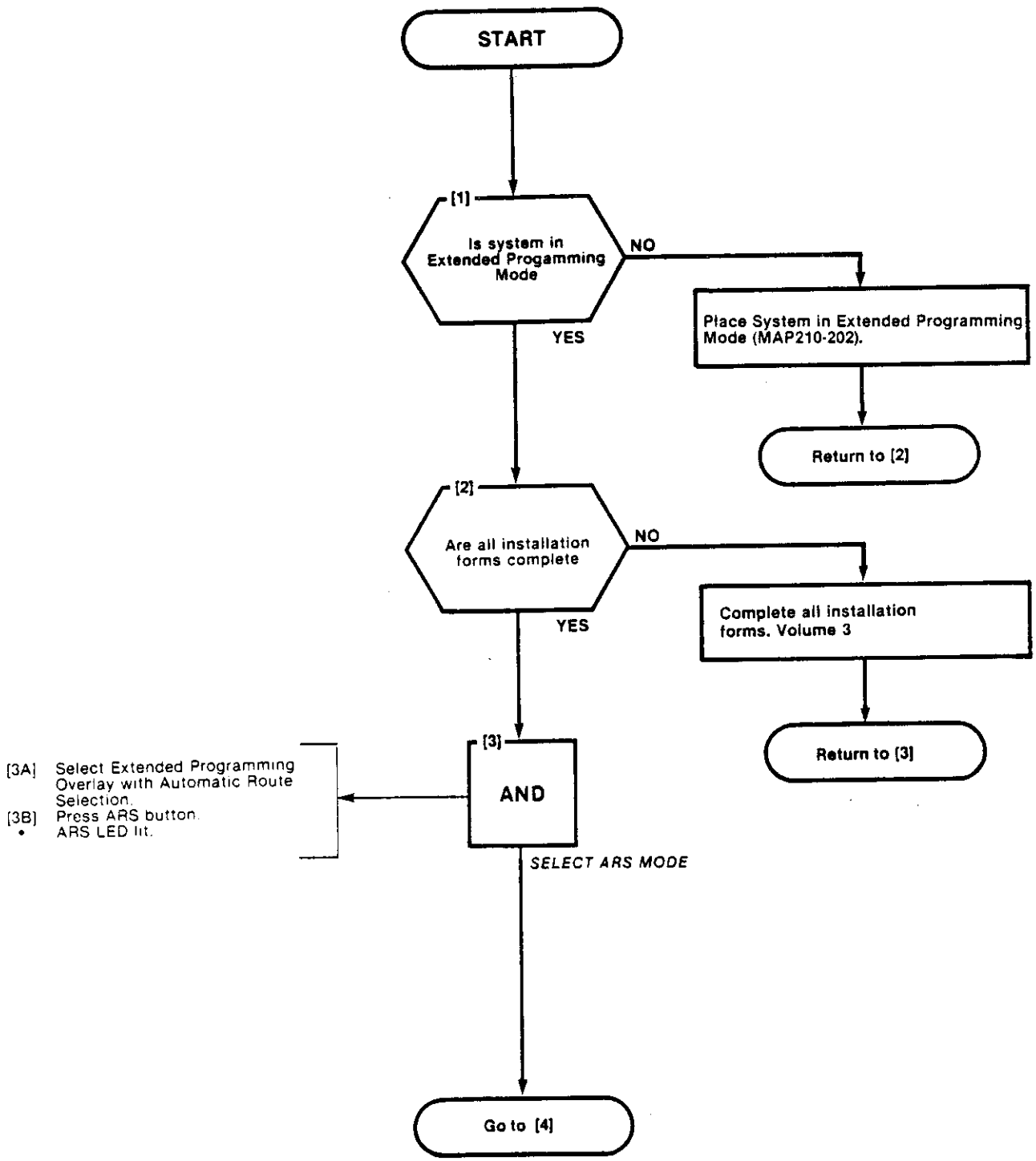

TO REVIEW OR DELETE MODIFY DIGIT TABLES
MAP210-257
Issue 2. February 1982
Sheet 2 of 4

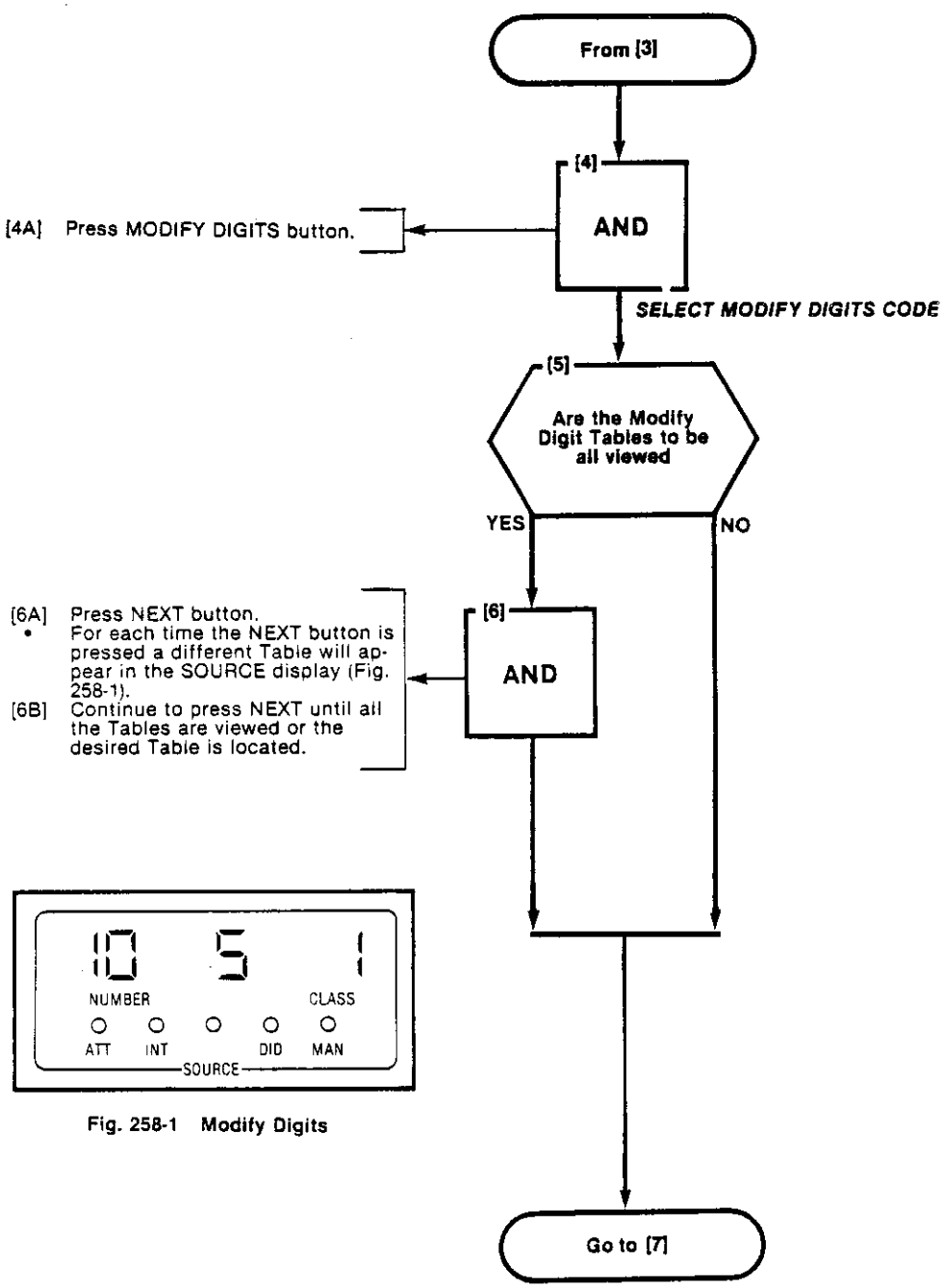

Fig. 258-1 Modify Digits

TO REVIEW OR DELETE MODIFY DIGIT TABLES
MAP210-257
Issue 2, February 1982
Sheet 3 of 4

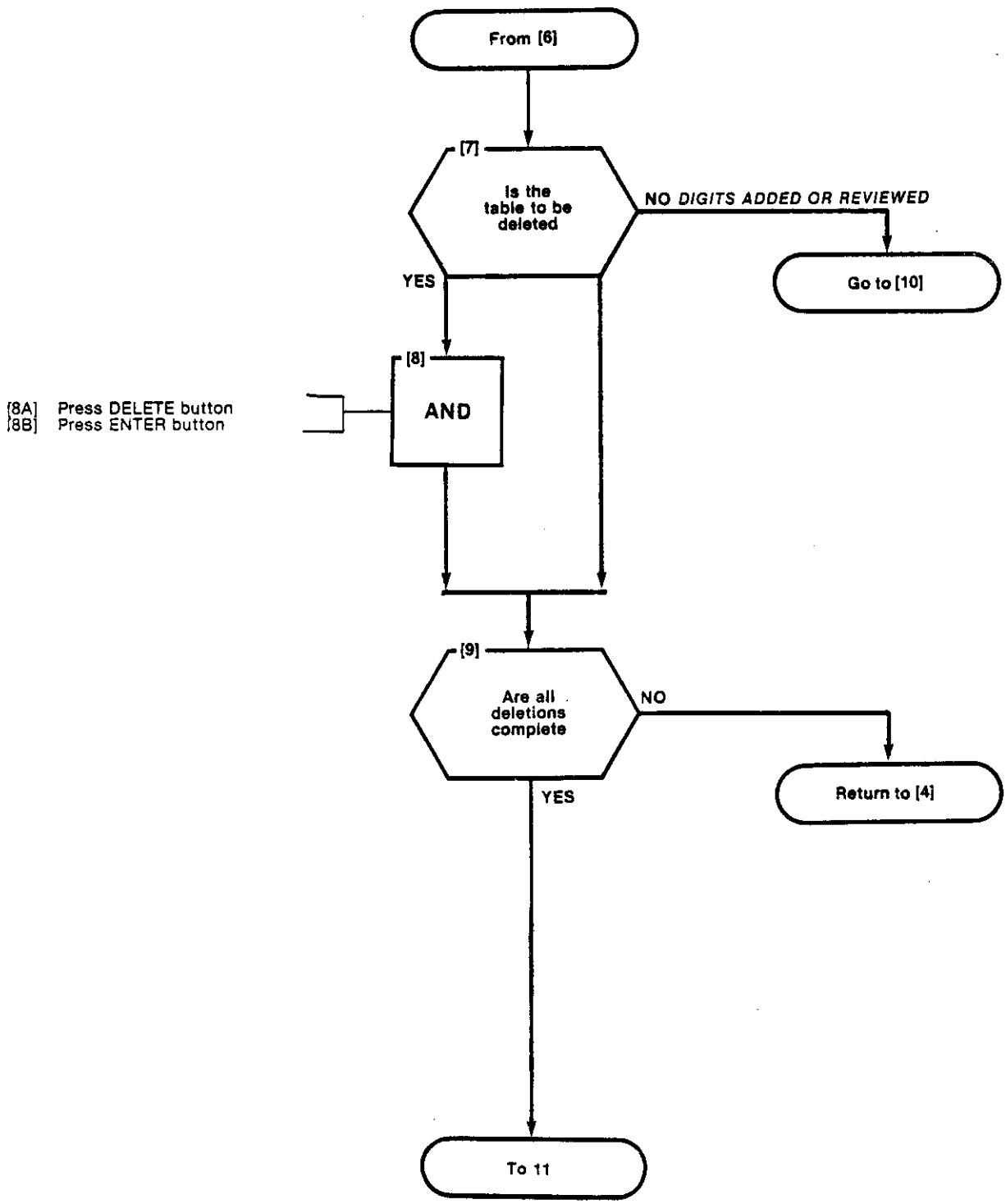

TO REVIEW OR DELETE MODIFY DIGIT TABLES
MAP210-257
Issue 2, February 1982
Sheet 4 of 4

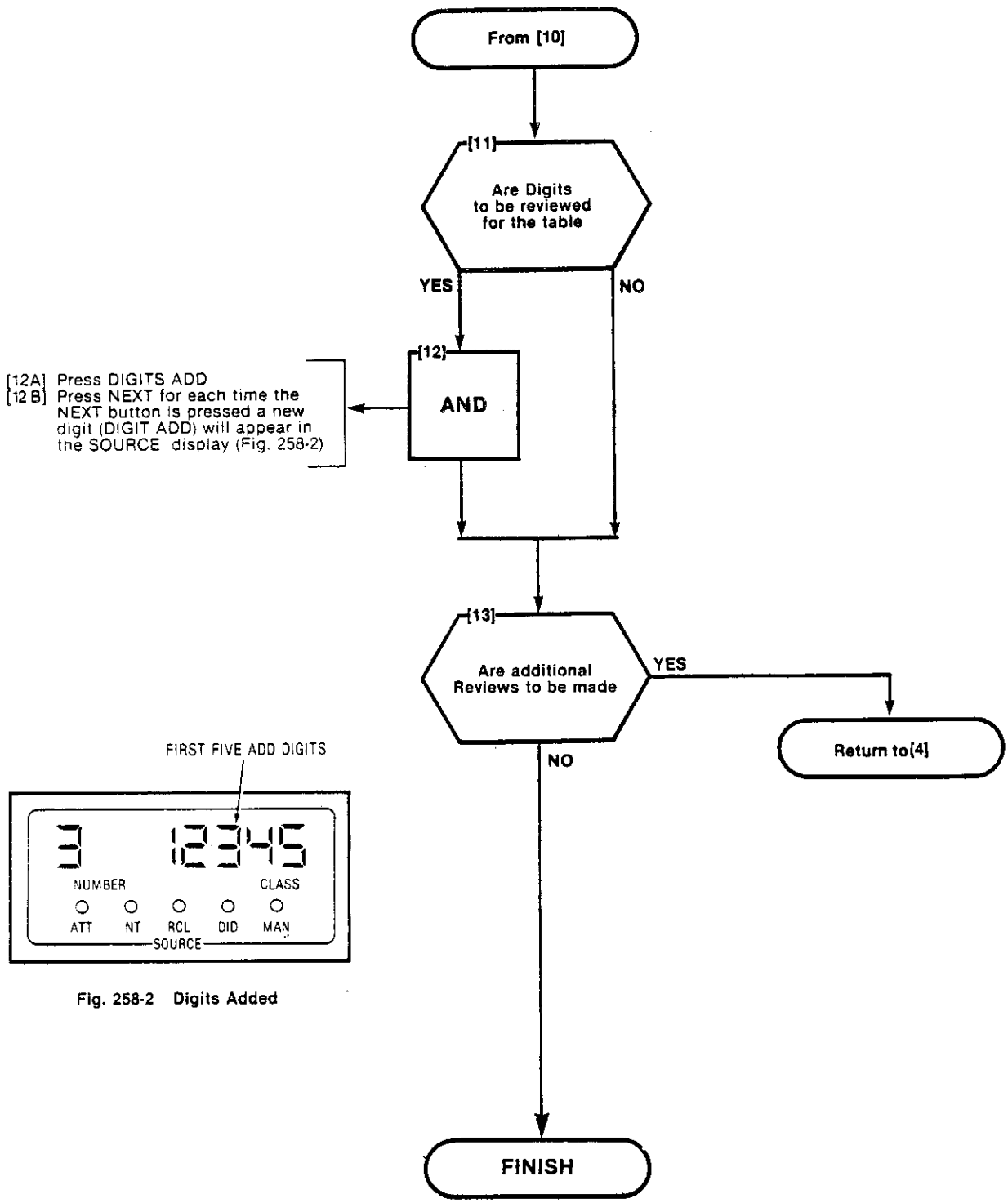

Fig. 258-2 Digits Added

ROUTE TABLE PROGRAMMING
MAP210-258
Issue 2. February 1982
Sheet 1 of 3

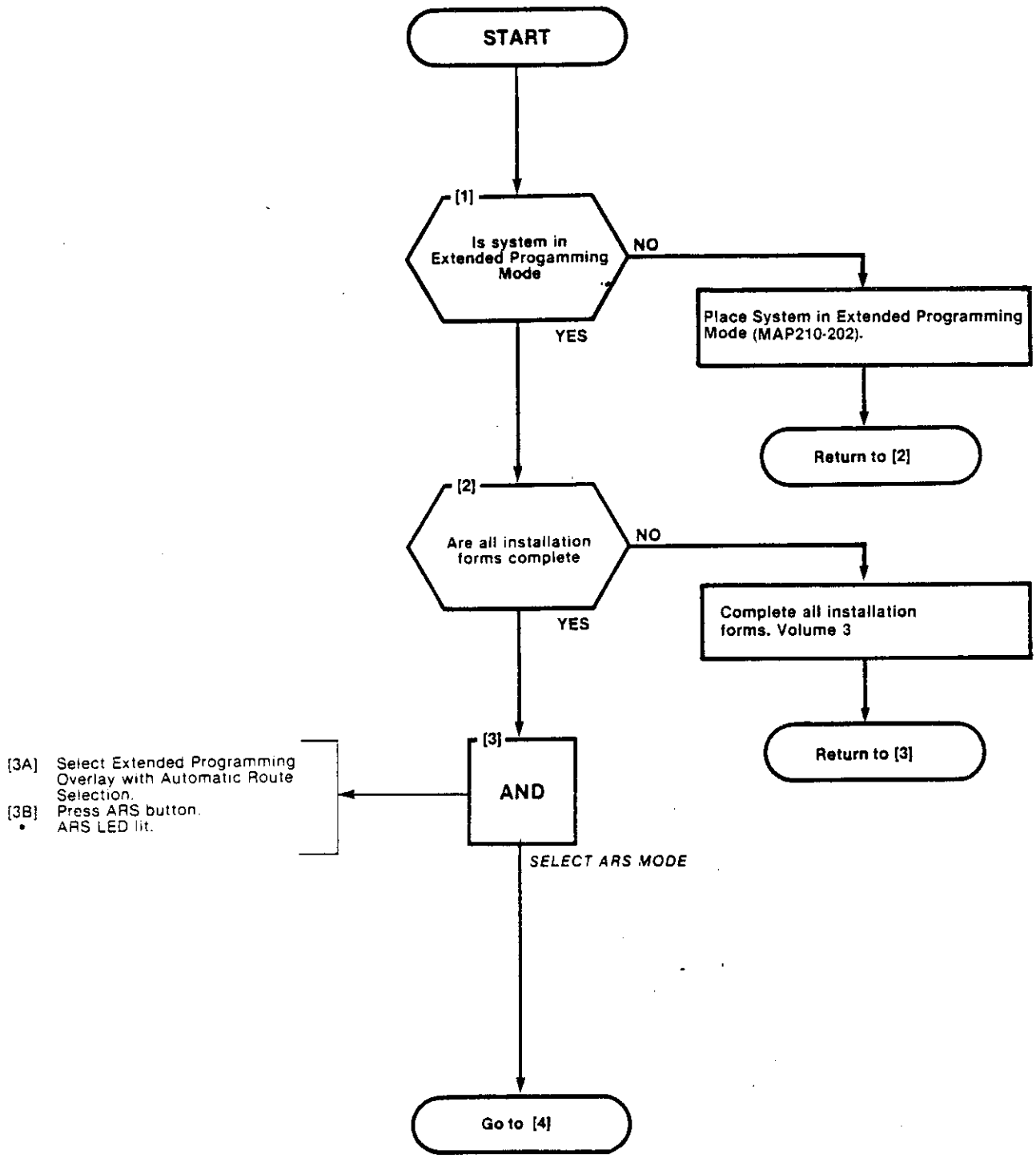

ROUTE TABLE PROGRAMMING
MAP210-258
Issue 2, February 1982
Sheet 2 of 3

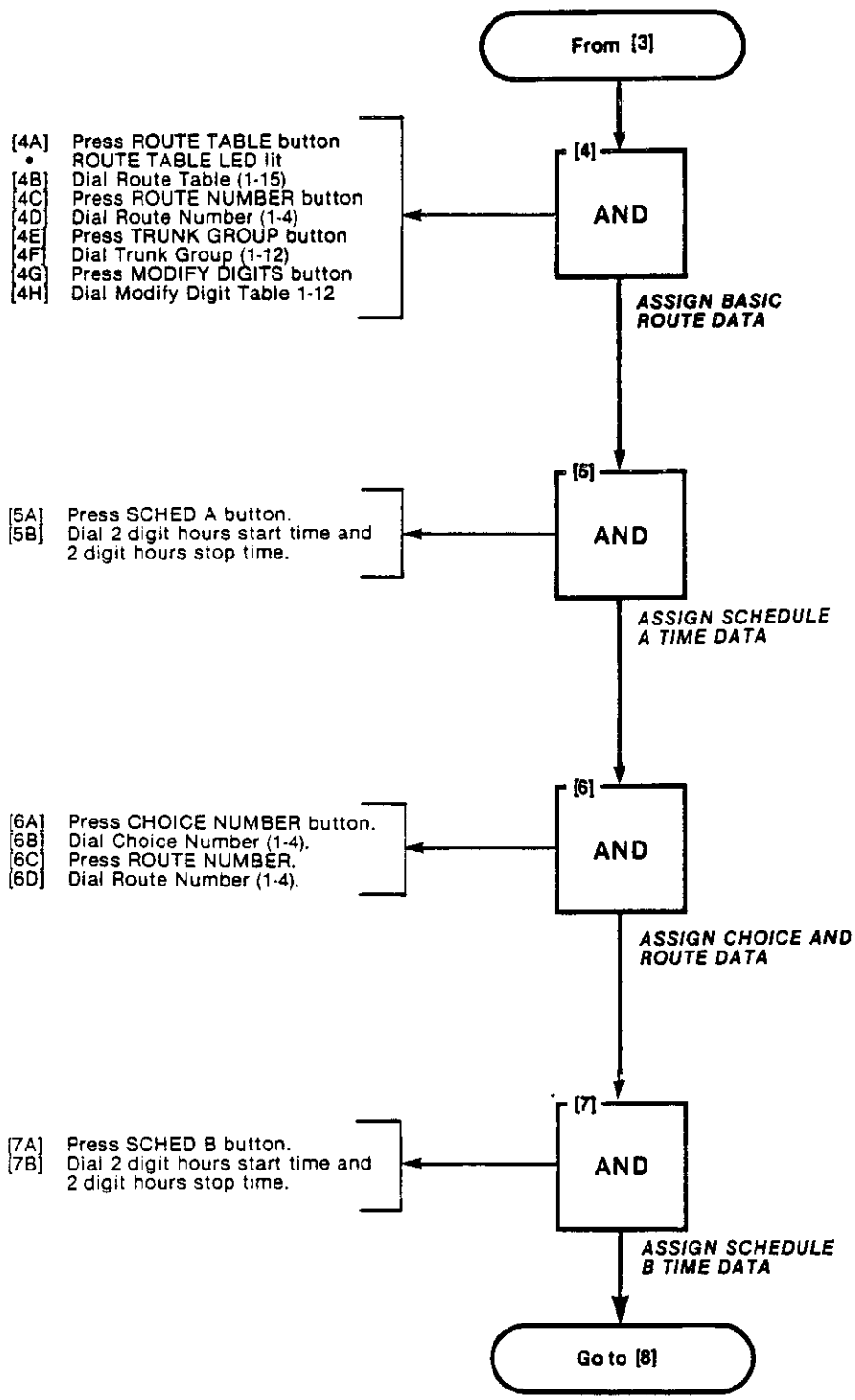

ROUTE TABLE PROGRAMMING
MAP210-258
Issue 2, February 1982
Sheet 3 of 3

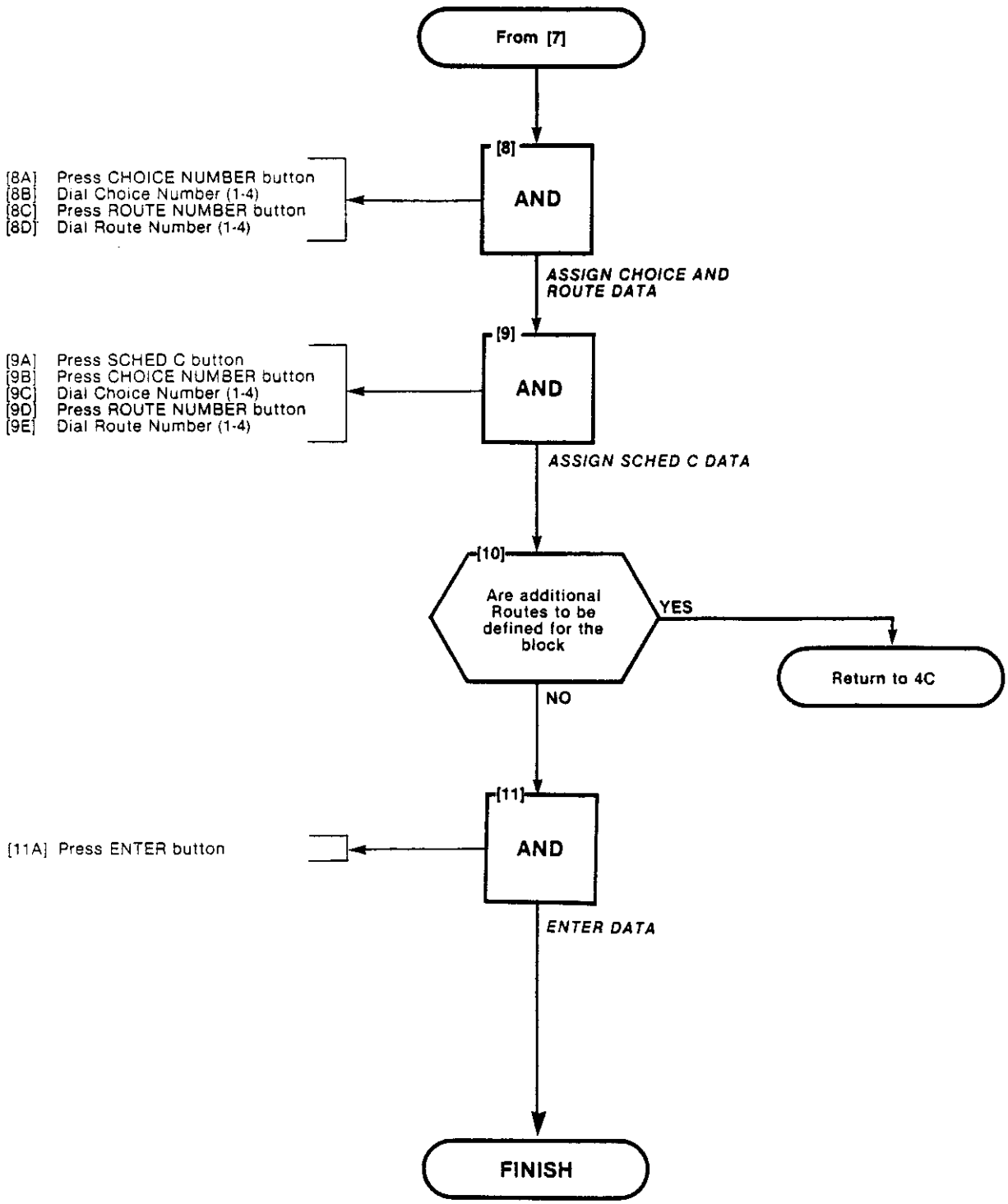

TO REVIEW OR DELETE A ROUTE TABLE
MAP210-259
Issue 2, February 1982
Sheet 1 of 3

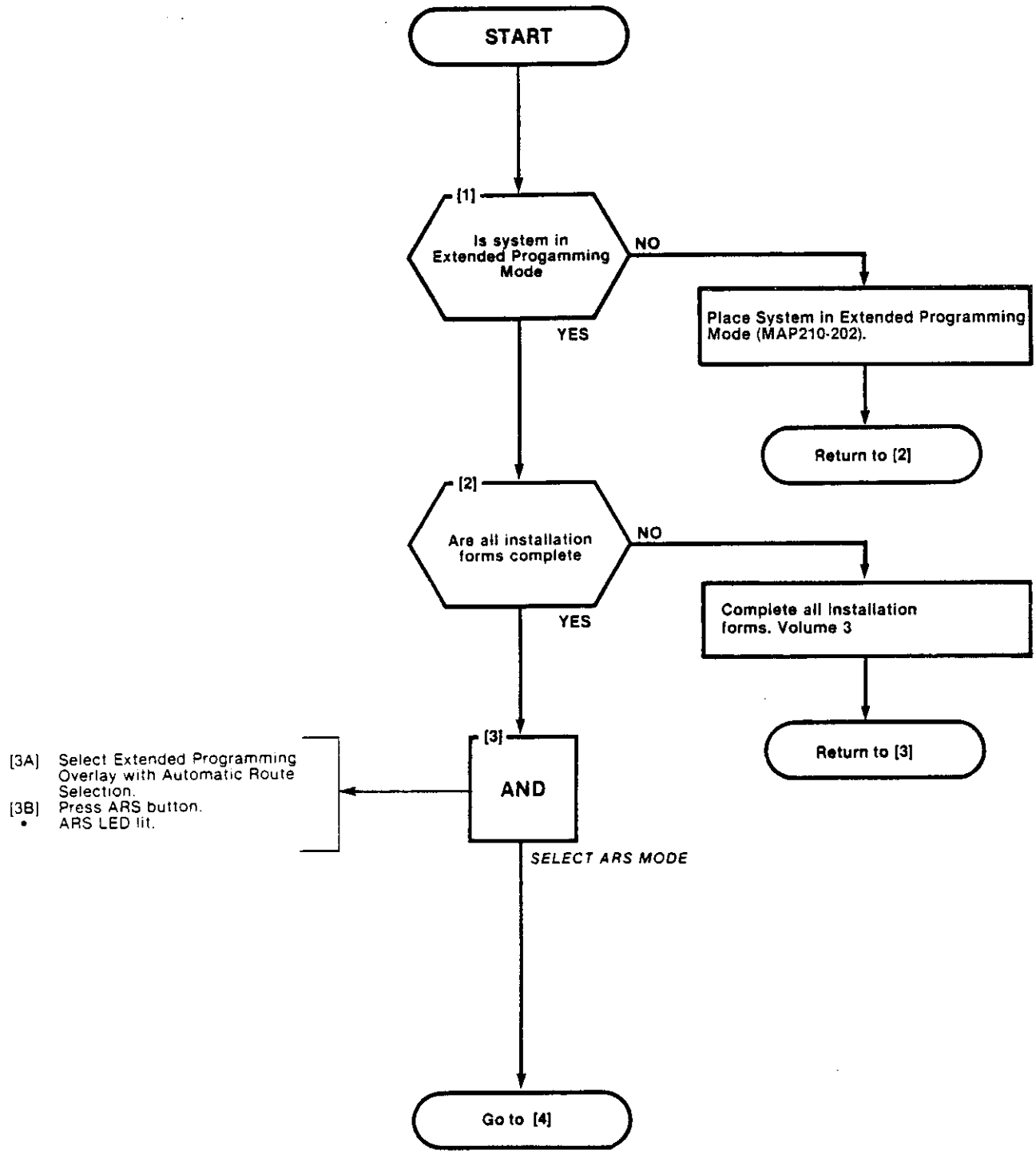

TO REVIEW OR DELETE A ROUTE TABLE
MAP210-259
Issue 2, February 1982
Sheet 2 of 3

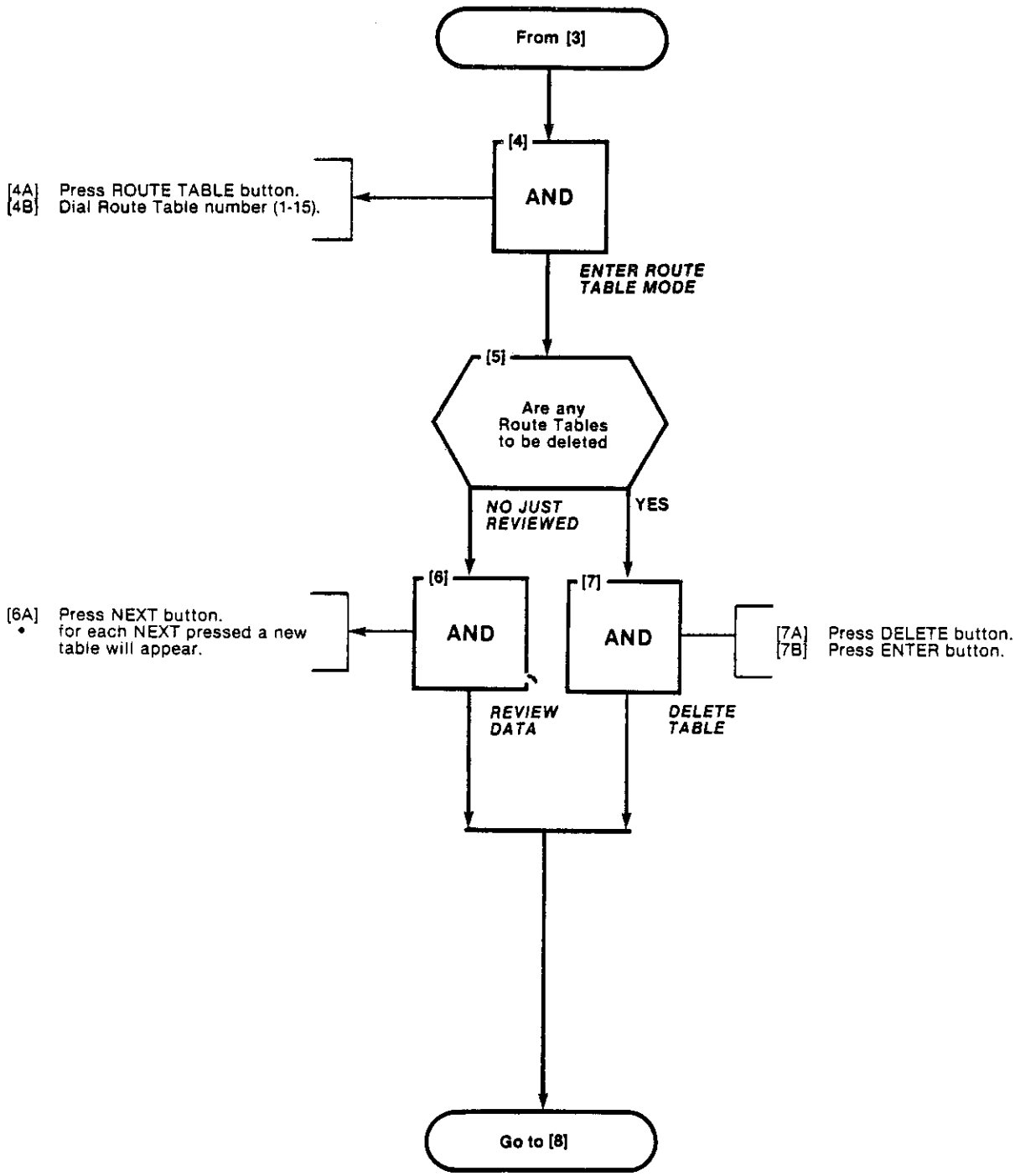

TO REVIEW OR DELETE A ROUTE TABLE
MAP210-259
Issue 2, February 1982
Sheet 3 of 3

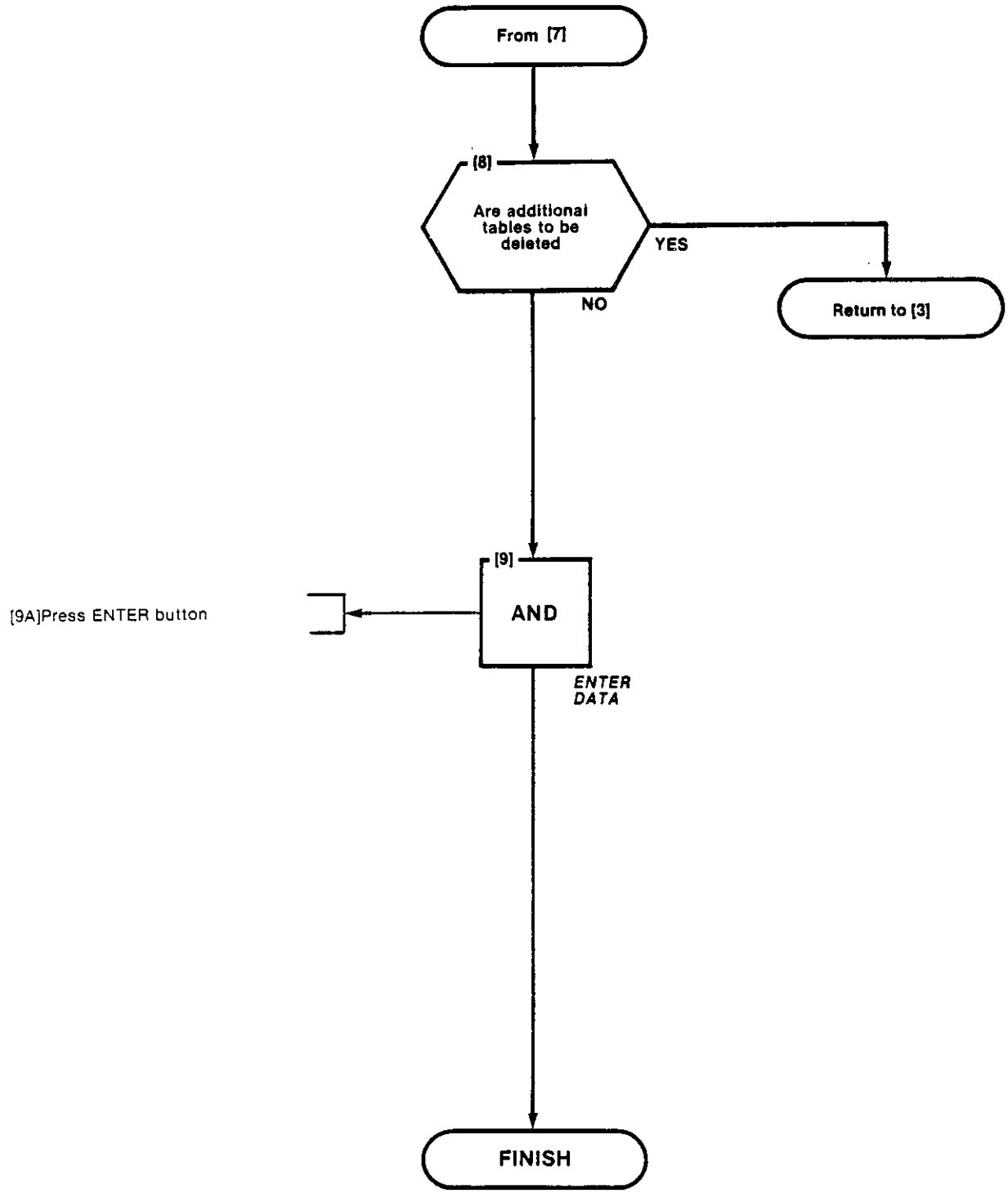

REVIEW OR DELETE ROUTES
MAP210-260
Issue 2, February 1982
Sheet 1 of 3

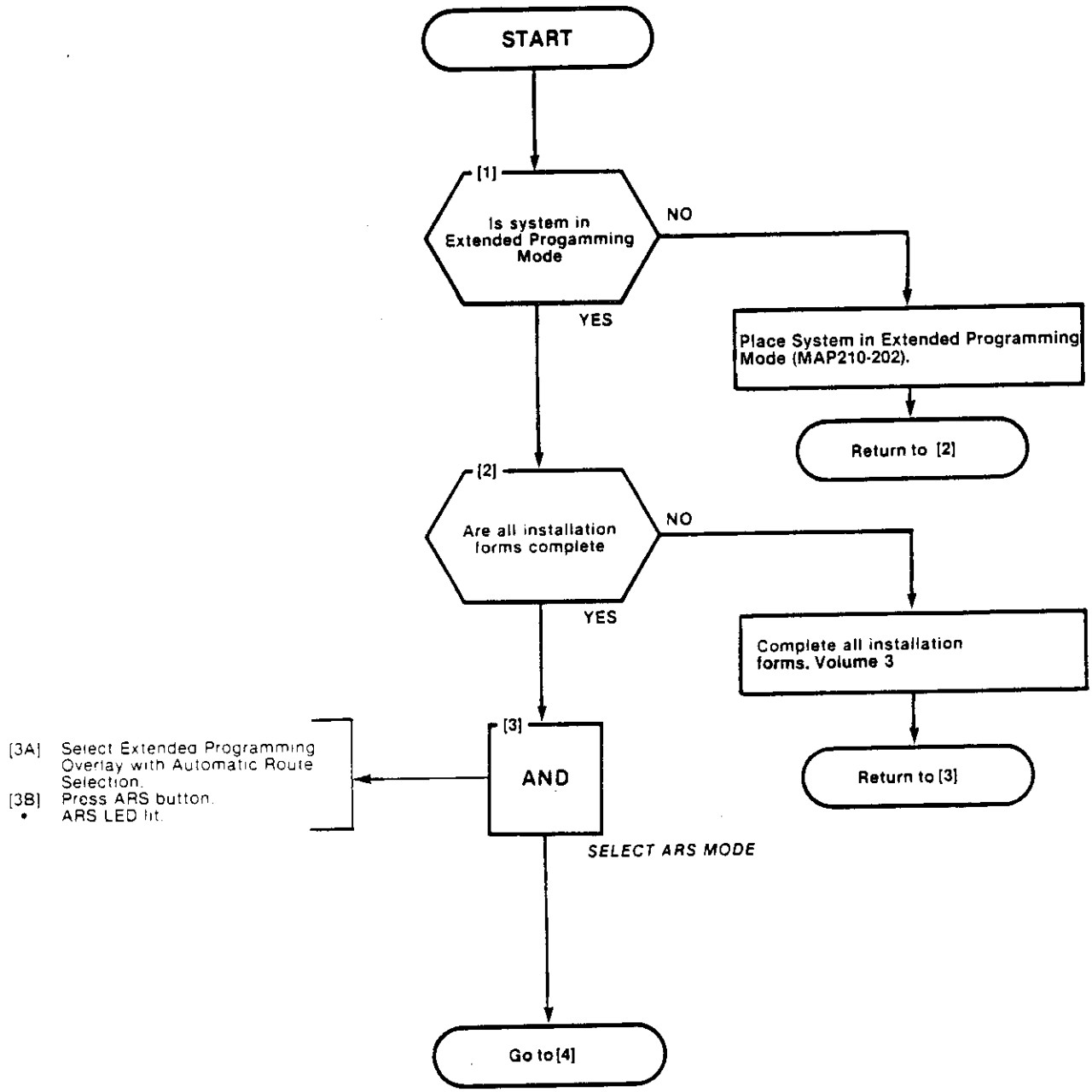

REVIEW OR DELETE ROUTES
MAP210-260
Issue 2, February 1982
Sheet 2 of 3

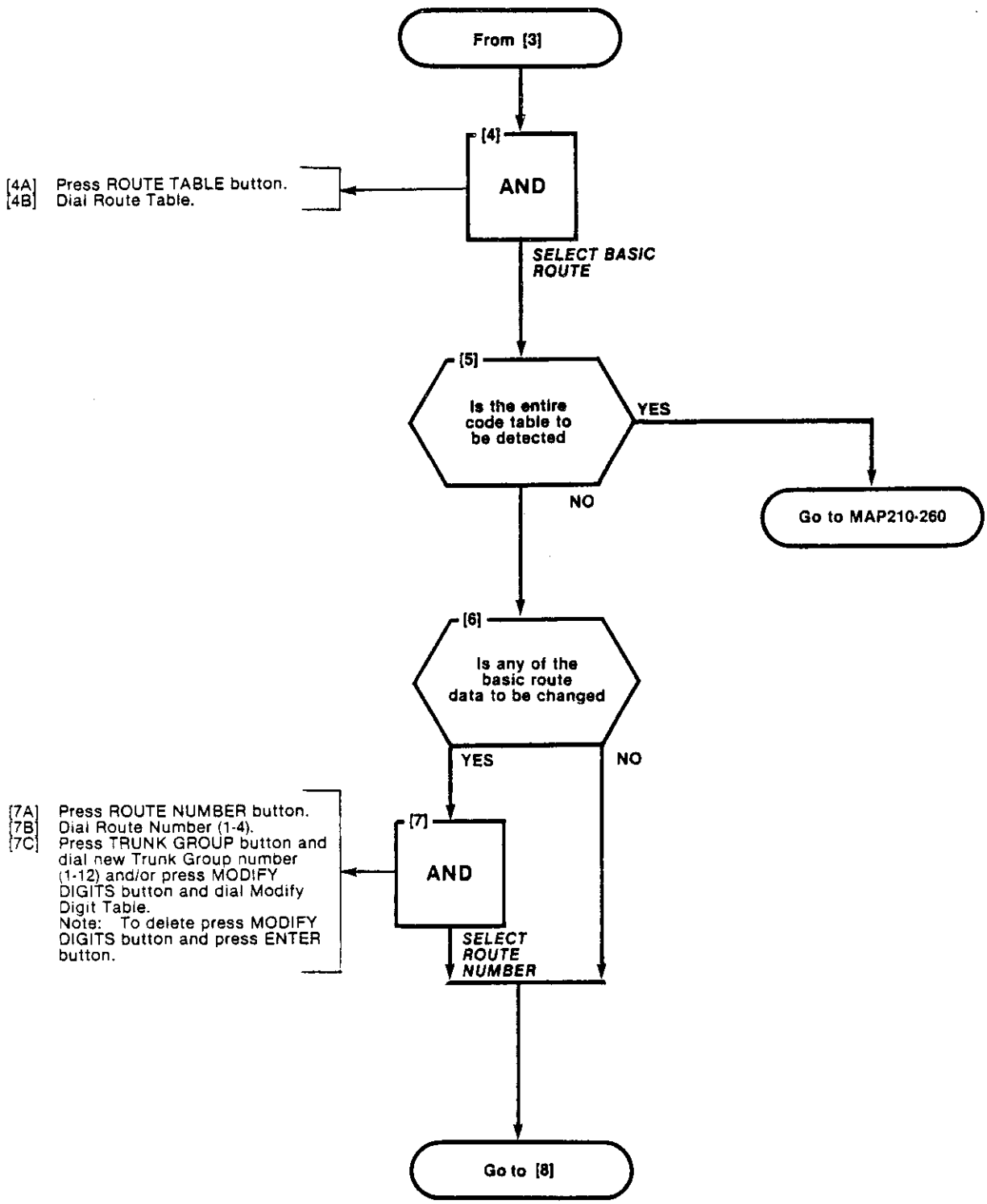

REVIEW OR DELETE ROUTES
MAP210-260
Issue 2. February 1982
Sheet 3 of 3

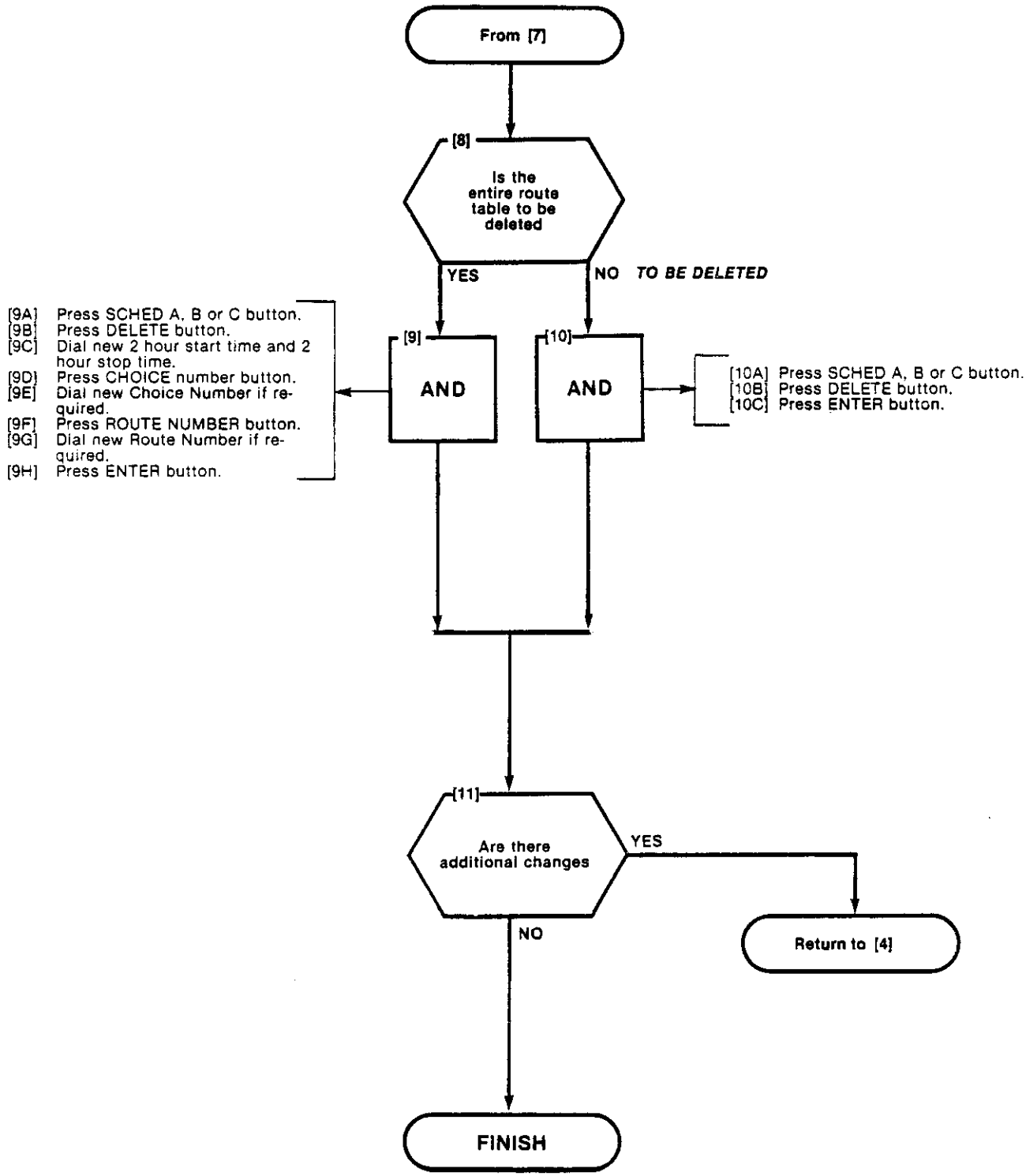

TERMINATING PROGRAMMING
MAP210-274
Issue 2, February 1982
Sheet 1 of 1

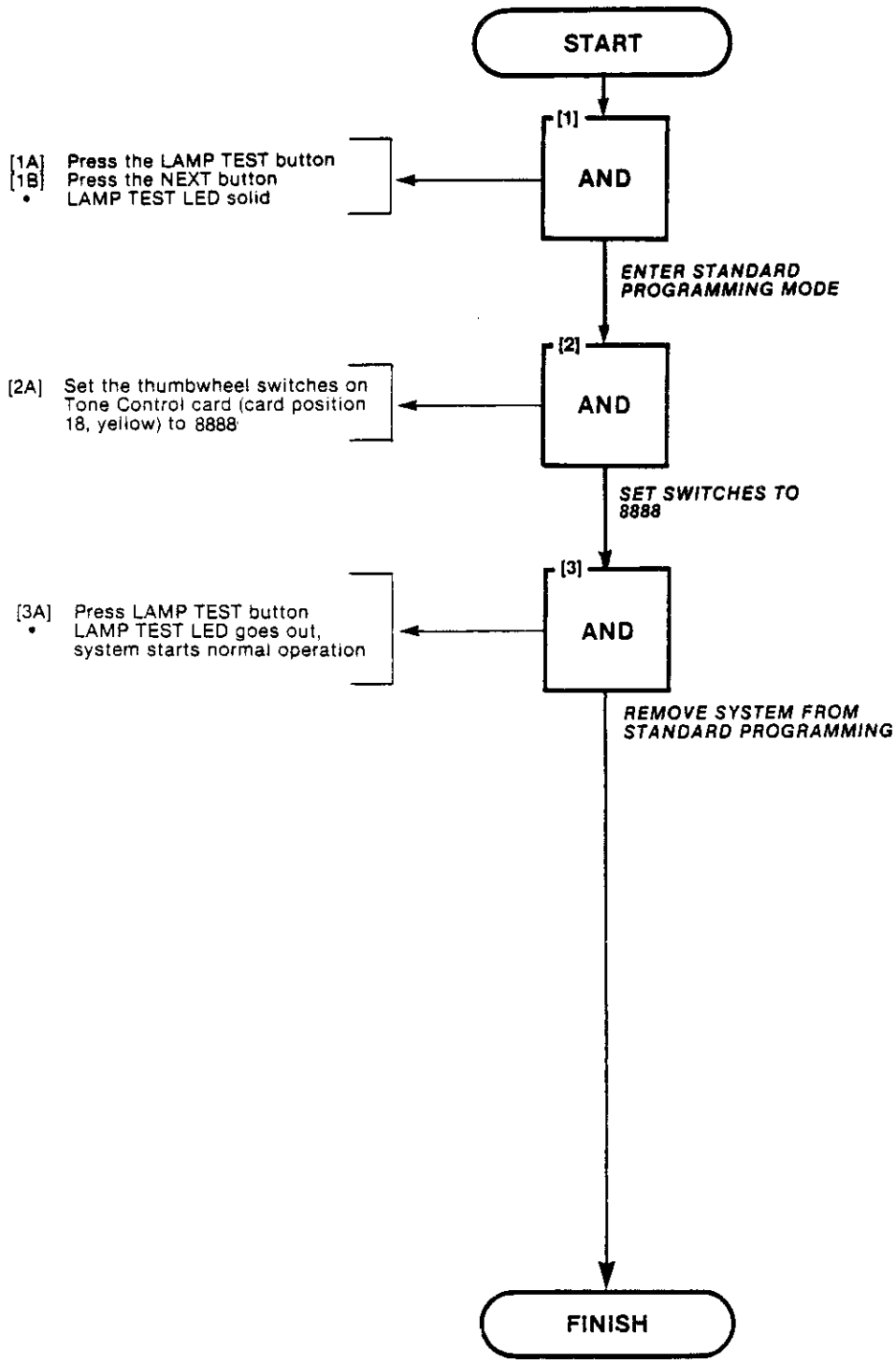

SX-100*SX-200*
SUPERSWITCH*
ELECTRONIC PRIVATE AUTOMATIC BRANCH EXCHANGE
SYSTEM TEST PROCEDURES
GENERIC 216

CONTENTS PAGE

1. INTRODUCTION 2

General 2
Reason for Reissue 2

2. DETAILED TEST PROCEDURES 3

System Test Procedures 3

APPENDIX 1 Mitel Action Procedures . A1-1

APPENDIX 2 Extension Tests A2-1/2

Set Up Test Equipment
(MAP215-201) A2-3/4
Broker's Call
(MAP215-202) A2-5/6
Call Forwarding - Busy
(MAP215-203) A2-7/8
Call Forwarding - Don't Answer
(MAP215-204) A2-9/10
Call Forwarding - Follow Me
(MAP215-205) A2-11/12
Call Park
(MAP215-206) A2-13/14
Call Pickup
(MAP215-207) A2-15/16
Camp-On
(MAP215-208) A2-17/18
Consultation Hold/Transfer/Add-On
(MAP215-209) A2-19/20
Automatic Callback - Don't Answer
(MAP215-210) A2-21/22
Automatic Callback - Busy
(MAP215-211) A2-23/24
Meet Me Conference
(MAP215-212) A2-25/26

CONTENTS PAGE

APPENDIX 2 Extension Test (Cont'd)

Executive Busy Override
(MAP215-213) A2-27/28
Paging
(MAP215-214) A2-29/30
Do Not Disturb
(MAP215-215) A2-31/32
Call Hold
(MAP215-216) A2-33
Room Status
(MAP215-217) A2-37/38
Automatic Wake-Up (Alarm Call)
(MAP215-218) A2-39/40
Use a Common Use Speed Call
(MAP215-219) A2-41/42
Personal Speed Call
(MAP215-220) A2-43/44
External Call Forwarding
(MAP215-221) A2-45/46
Transfer with Privacy
(MAP215-222) A2-47/48
Account Code
(MAP215-223) A2-49/50
Hands-Free Station
(MAP215-224) A2-51/52
Call Forwarding Busy/Don't Answer
(MAP215-225) A2-53/54
Enable Non-CO to Trunk Connect
(MAP215-226) A2-55/56

APPENDIX 3 Console Tests A3-1/2

Answer Incoming Call
(MAP215-300) A3-3
Automatic Callback
(MAP215-301) A3-7/8

Copyright of MITEL Corporation 1981

* Trademark of MITEL Corporation 1981

CONTENTS PAGE

APPENDIX 3 Console Tests (Cont'd)

Extending Internal Calls (MAP215-302) A3-9/10
Answering Recall (MAP215-303) A3-11
Override (MAP215-304) A3-13/14
Flexible Night Service (MAP215-305) A3-15/16
Trunk Busy Operation (MAP215-306) A3-17/18
Trunk Group Attendant Access (MAP215-307) A3-19/20
Trunk Group Dial Access (MAP215-308) A3-21/22
Test Termination (MAP215-309) A3-23/24
Answering Incoming CO Trunk Call (MAP215-310) A3-29
Attendant Do Not Disturb (MAP215-311) A3-33/34
Message Waiting (MAP215-312) A3-35
Attendant Call Forwarding - Busy (MAP215-313) A3-37
Attendant Call Forwarding - Don't Answer (MAP215-314) A3-39/40
Attendant Call Forwarding - Follow Me (MAP215-315) A3-41/42
Attendant Call Forwarding Busy/Don't Answer (MAP215-316) A3-43/44
Attendant Controlled Conference (MAP215-317) A3-45
Attendant Station Busy Out (MAP215-318) A3-47/48
Call Block (MAP215-319) A3-49
Attendant Do Not Disturb (H/M) (MAP215-320) A3-51
Message Registration (MAP215-321) A3-55/56
Controlled Outgoing Call Restriction (H/M) (MAP215-322) A3-57
Room Status (MAP215-323) A3-59
Automatic Wake-Up (Alarm Call) (MAP215-324) A3-63
Message Waiting (H/M) (MAP215-325) A3-65/66
Console Data Display and Date Utility (MAP215-326) A3-67/68
Customer Program Dump/Load (MAP215-327) A3-69
Controlling the Printer (MAP215-328) A3-71/72
Room Audit (MAP215-329) A3-73/74
System Identifier (MAP215-330) A3-75/76
Common Use Speed Call (MAP215-331) A3-77/78
Customer Programming (MAP215-332) A3-79/80
External Call Forwarding (MAP215-333) A3-81/82
Test Audible Tone Indicators (MAP215-334) A3-83
Single Digit Dialing (MAP215-335) A3-85
Common Alerting Devices (MAP215-336) A3-87/88
Answer DID Trunk Call (MAP215-337) A3-89

1. INTRODUCTION

General

1.01 This Section details the system test procedures to be performed after the system installation (Section MITL9105/9110-097-200-NA) and programming (Section MITL9105/9110-097-210-NA) have been completed. Upon completion of the tests listed in this Section, all programmed system options and features will have been checked.

Reason for Reissue

1.02 This Section has been reissued to include enhancements to the extensions and console test procedures for Generic 216.

2. DETAILED TEST PROCEDURES

General

2.01 All test procedures in this Section are performed in accordance with MITEL Action Procedures (MAP's). An outline of the purpose and use of MAP's is contained in Appendix 1. Actual system test procedures to be used for the PABX are as detailed in the following paragraphs.

System Test Procedures

2.02 The System Test Procedures are divided into two appendices: Extension Tests and Console Tests. The test level relationship is given in Tables 2-1 and 2-2. Some tests may not be relevant, i.e. Hotel/Motel (H/M) options when the system is configured for a business arrangement. Tables 2-3 and 2-4 give the suggested applications of these tests as Hotel/Motel (H/M) and Business. Note: that in some situations some systems may use Options that seem out of context to the Hotel/Motel and Business sections, however the relevant test should still be performed for these options.

2.03 Where several customers (tenants) share one PABX then the test procedures to be performed (listed in Tables 2-1, 2-2, 2-3 and 2-4) are in respect to the "Non-Hotel/Motel" options, i.e. they are the same as for the a single customer configuration. It should be noted however that the console SOURCE and DESTINATION displays, during the test procedures, will reflect the fact that a multi-tenant configuration is in effect. These displays will show the "tenant" digit which prefixes the extension number. A typical example of this difference is illustrated in Figs. 2-1 and 2-2, respectively showing a single customer extension display, and a display which indicates that the calling extension (333) forms part of Tenant group 2.

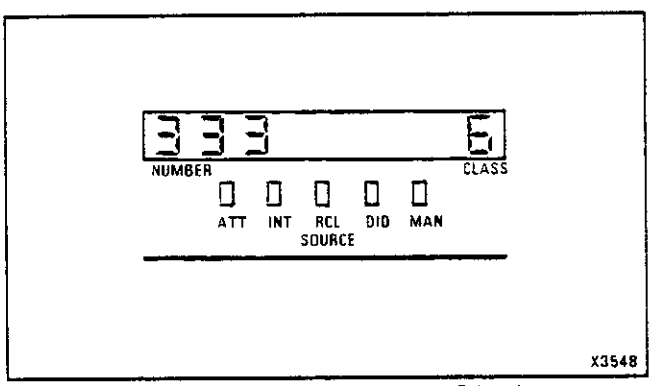

Fig. 2-1 Single Customer Display

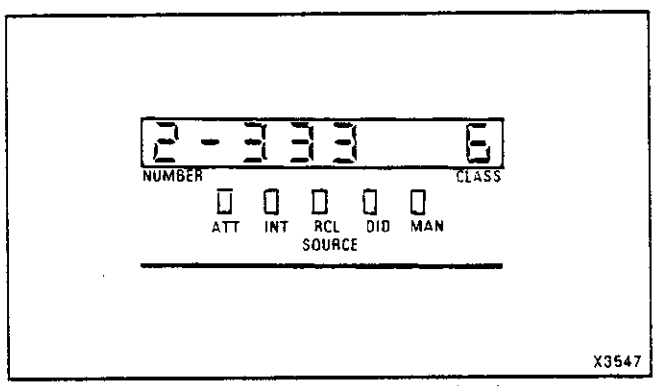

Fig. 2-2 Multi-Tenant Display

TABLE 2-1 EXTENSION TESTS

TEST	APPLICATION
Set Up Test Equipment	All
Broker's Call	All
Call Forwarding - Busy	All
Call Forwarding - Don't Answer	All
Call Forwarding - Follow Me	All
Call Park	All
Call Pickup	All
Camp-On	All
Consultation Hold/Transfer/Add-On	All
Automatic Callback - Don't Answer	All
Automatic Callback - Busy	All
Meet Me Conference	All
Executive Busy Override	All
Paging	All
Do Not Disturb	All
Call Hold	All
Room Status	H/M
Automatic Wake-Up (Alarm Call)	H/M
Personal Speed Call	H/M
Common Use Speed Call	Business
External Call Forwarding	All
Transfer with Privacy	All
Account Code	Business
Hands-Free Station	All
Call Forwarding Busy/Don't Answer	All
Enable Non-CO to Trunk Connect	All

TABLE 2-2 CONSOLE TESTS

TEST	APPLICATION
Answer Incoming Call	All
Automatic Callback	All
Extending Internal Calls	All
Answering Recall	All
Override	All
Flexible Night Service	All
Trunk Busy Operation	All
Trunk Group Attendant Access	All
Trunk Group Dial Access	All
Test Termination	All
Answer Incoming CO Trunk Call	All
Attendant Do Not Disturb	All
Message Waiting	All
Attendant Call Forwarding - Busy	All
Attendant Call Forwarding - Don't Answer	All
Attendant Call Forwarding - Follow Me	All
Attendant Call Forwarding Busy/Don't Answer	All
Attendant Controlled Conference	All
Attendant Station Busy Out	All
Call Block	H/M
Attendant Do Not Disturb	All
Message Registration	H/M
Controlled Outgoing Call Restriction	All
Room Status	H/M
Automatic Wake-Up (Alarm Call)	H/M
Message Waiting H/M	H/M
Console Date Display and Date Utility	All
Customer Program Dump Load	All
Controlling the Printer	All
Room Audit	H/M
System Identifier	All
Common Use Speed Call	Business
Customer Programming	All
External Call Forwarding	All
Test Audible Tone Indicators	All

TABLE 2-3 EXTENSION APPLICATIONS

TEST	APPLICATION
Set Up Test Equipment	Both
Broker's Call	Business
Call Forwarding - Busy	Business
Call Forwarding - Don't Answer	Business
Call Forwarding - Follow Me	Business
Call Park	Business
Call Pickup	Business
Camp-On	Business
Consultation Hold/Transfer/Add-On	Business
Automatic Callback - Don't Answer	Business
Automatic Callback - Busy	Business
Meet Me Conference	Business
Executive Busy Override	Business
Paging	Business
Do Not Disturb	Both
Call Hold	Business
Room Status	H/M
Automatic Wake-Up (Alarm Call)	H/M
Personal Speed Call	Business
Common Use Speed Call	Business
External Call Forwarding	Business
Transfer with Privacy	Business
Account Code	Business
Hands-Free Station	Business
Call Forwarding Busy/Don't Answer	Business
Enable Non-CO to Trunk Connect	Business

TABLE 2-4 CONSOLE APPLICATION

TEST	APPLICATION
Answer Incoming Call	Both
Automatic Callback	Both
Extending Internal Calls	Both
Answering Recall	Both
Override	Business
Flexible Night Service	Both
Trunk Busy Operation	Both
Trunk Group Attendant Access	Both
Trunk Group Dial Access	Both
Test Termination	Both
Answer Incoming CO Trunk Call	Both
Attendant Do Not Disturb	Both
Message Waiting	H/M
Attendant Call Forwarding - Busy	Business
Attendant Call Forwarding - Don't Answer	Business
Attendant Call Forwarding - Follow Me	Business
Attendant Call Forwarding Busy/Don't Answer	Business
Attendant Controlled Conference	Business
Attendant Station Busy Out	Both
Call Block	H/M
Attendant Do Not Disturb	H/M
Message Registration	H/M
Controlled Outgoing Call Restriction	H/M
Room Status	H/M
Automatic Wake-Up (Alarm Call)	H/M
Message Waiting H/M	H/M
Console Date Display and Date Utility	Both
Customer Program Dump Load	Both
Controlling the Printer	Both
Room Audit	H/M
System Identifier	Both
Common Use Speed Call	Business
Customer Programming	Both
External Call Forwarding	Business
Test Audible Tone Indicators	Both

APPENDIX 1
MITEL ACTION PROCEDURES

GENERAL

A1.01 Task oriented functions in this section are implemented using MITEL ACTION PROCEDURES (MAP's).

A1.02 A MAP is a step by step procedure using a flow chart principle, written and illustrated where necessary to a level of detail that allows both experienced and inexperienced personnel to carry out the tasks detailed. A MAP contains two levels of information as follows:

(a) For experienced personnel, a series of steps (level one) each numbered (n) and annotated with minimal information.

(b) For inexperienced personnel, each step referred to in (a) above is amplified by a connected series of numbered substeps (nA) (level two).

A1.03 A typical example of a MAP is shown in Fig. A1-1, with the two levels detailed.

MAP SYMBOLS

A1.04 There are four basic symbol shapes which may be used in a MAP, and are defined as follows.

A1.05 AND Block: Used to indicate a level one step that must be performed. Consists of a square with the word AND centred in the block.

A1.06 OR Block: Used to indicate a choice of level one steps, one of which must be performed. Consists of a rectangle, with the text centred in the block, and with the word OR appearing between the alternative operations.

A1.07 The rectangle is also used to border instructions which imply that the operative must perform a task outside the scope of the MAP. The text is centred in the rectangle.

A1.08 DECISION Block: Used to indicate a decision within the level one steps which must be made. The symbol is based on a hexagon with the top and bottom sides extended. Decision text is centred in the symbol.

A1.09 START/FINISH/JUMP TO Block: Used to indicate the start and finish of a MAP. Also used to indicate "jump to" points within the MAP, for example "go to (n)" or "from (n)" or "return to (n)". The symbol is a rectangle with semi-circular ends. Text is centred in the symbol.

THE OPERATORS USE OF MAP'S

Experienced Operator

A1.10 For the experienced operator to complete a task using a MAP, reference to the sequential short form level one steps is usually all that is necessary. Using Fig. A1 as an example, the experienced operator would proceed as follows.

A1.11 A (1) makes a decision based on the information within the block. If the answer is YES, the operator must proceed to a different MAP. If the answer is NO, the operator is faced with another decision at block (2).

A1.12 At (2) if the decision is NO, there is no requirement to proceed further and the test is abandoned. This naturally results in a FINISH block. If the decision is YES, the operator proceeds to (3) and (4) in succession, i.e. dials the DID station number and completes the call to the check extension.

A1.13 The description of the instructions carried out in A1.05 and A1.06 have assumed that the level of competence of the operator is such that short form level one steps contain sufficient information, and therefore the operator reads only the centre column of the MAP, top to bottom of the page.

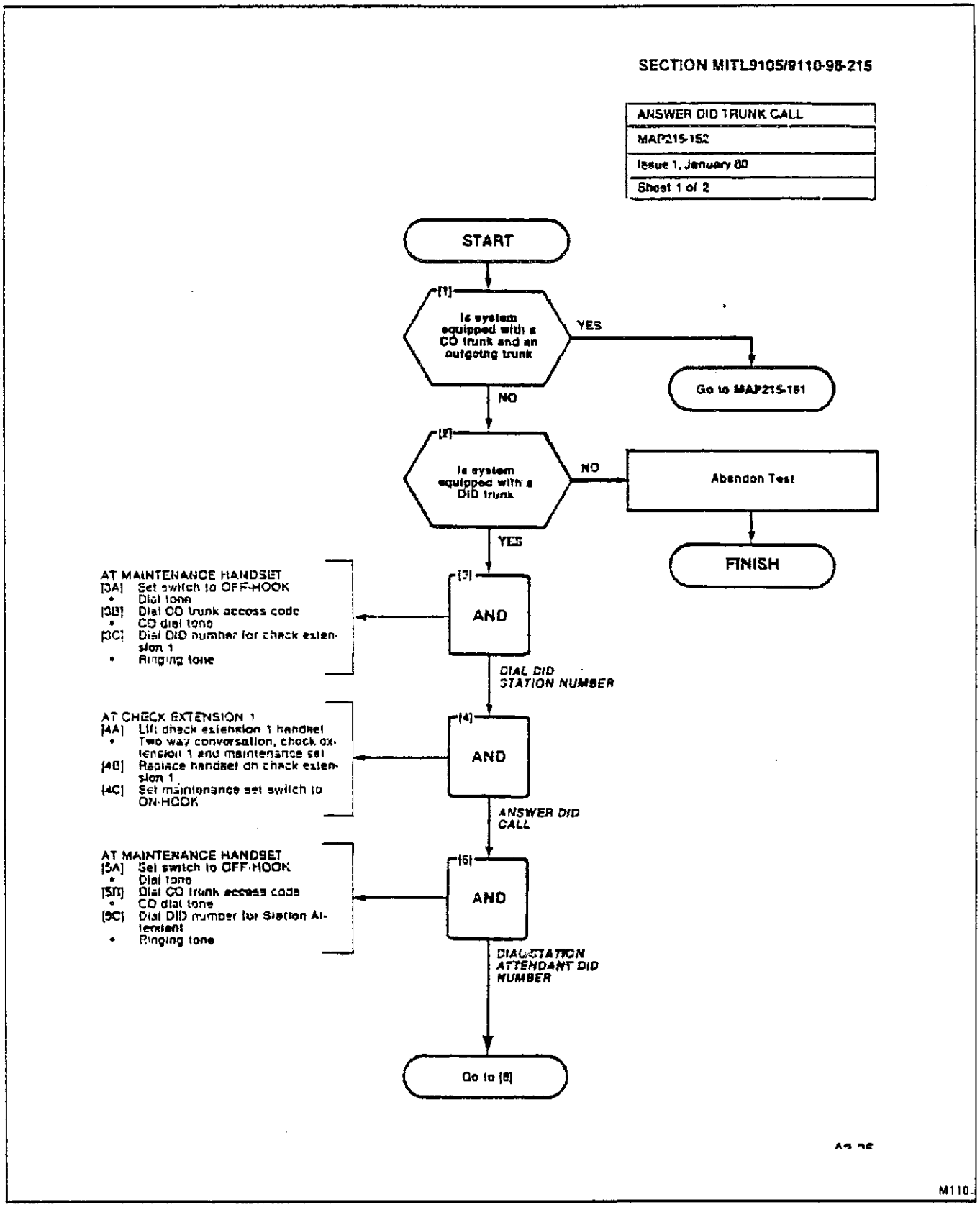

Fig. A1-1 Typical MAP Page

Inexperienced Operator

A1.14 If the operator's experience is such that the level two substeps should be referred to as follows.

(a) At (1) and (2) make the decisions called for at these steps as before.

(b) At step (3) dial the DID station number by performing substeps (3A), (3B) and (3C).

In terms of steps and substeps, the operative follows a decision, decision then step and substep paths in the example shown.

TOOLS, TEST EQUIPMENT AND SPECIAL INSTRUCTIONS

A1.16 Any tools, test equipment or special instructions that the operator required or needs to know are stated on the first page of each MAP. If the MAP is long, and contains a number of sub procedures, these are listed in synopsis form on the first page.

APPENDIX 2
EXTENSION TESTS

A2.01 The following test are a series of extension tests. Specific reference should be made to Table 2-1 and Table 2-3. These Tables will determine the Generic level applicable and if the test is relevant to the system application.

TABLE A2-1 EXTENSION TESTS

ORDER	OPTION	MAP No.
1	Set Up Test Equipment	215-201
2	Broker's Call	215-202
3	Call Forwarding - Busy	215-203
4	Call Forwarding - Don't Answer	215-204
5	Call Forwarding - Follow Me	215-205
6	Call Park	215-206
7	Call Pickup	215-207
8	Camp-On	215-208
9	Consulatation Hold/Transfer/Add-On	215-209
10	Automatic Callback - Don't Answer	215-210
11	Automatic Callback - Busy	215-211
12	Meet Me Conference	215-212
13	Executive Busy Override	215-213
14	Paging	215-214
15	Do Not Disturb	215-215
16	Call Hold	215-216
17	Room Status	215-217
18	Automatic Wake-Up (Alarm Call)	215-218
19	Common Use Speed Call	215-219
20	Personal Speed Call	215-220
21	External Call Forwarding	215-221
22	Transfer with Privacy	215-222
23	Account Code	215-223
24	Hands-Free Station	215-224
25	Call Forwarding Busy/Don't Answer	215-225
26	Enable Non-CO to Trunk Connect	215-226

SET UP TEST EQUIPMENT
MAP215-201
Issue 2, February 1982
Sheet 1 of 2

TEST EQUIPMENT REQUIRED
Maintenance Handset (BUTT-IN)
Console
1, 2 and 3 Telephone Sets (Check Extensions located within reach of equipment cabinet)

START

[1]
AND

[1A] Unlock and open cabinet door on cabinet versions

ON MAINTENANCE PANEL

[1B] Connect maintenance handset Tip lead to TIP stud (Fig. 201-1)

[1C] Connect maintenance handset Ring lead to RING stud

[1D] Insert console connector into MAINTENANCE CONNECTOR

AT CHECK EXTENSION 1, 2, AND 3

[1E] Connect check extension Tip and Ring lead to TIP and RING pins on CROSS CONNECT FIELD

CONNECT TEST EQUIPMENT (FIG. 201-1)

Note: Check extension must have access to all features to be tested.

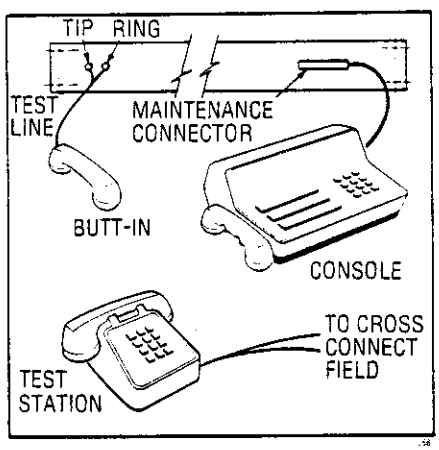

Fig. 201-1

AT MAINTENANCE HANDSET

[2A] Set switch to OFF-HOOK
- Dial tone

[2B] Dial 0
- Ringing tone
- Console rings

AT CONSOLE

[2C] Press ANSWER
- SOURCE display shows number and class-of-service of test line, ATT lamp lit

[2D] Note number of test line

[2E] Press RELEASE

[2F] Set maintenance handset switch to ON-HOOK

[2]
AND

DETERMINE NUMBER OF TEST LINE

Go to [3]

SET UP TEST EQUIPMENT
MAP215-201
Issue 2, February 1982
Sheet 2 of 2

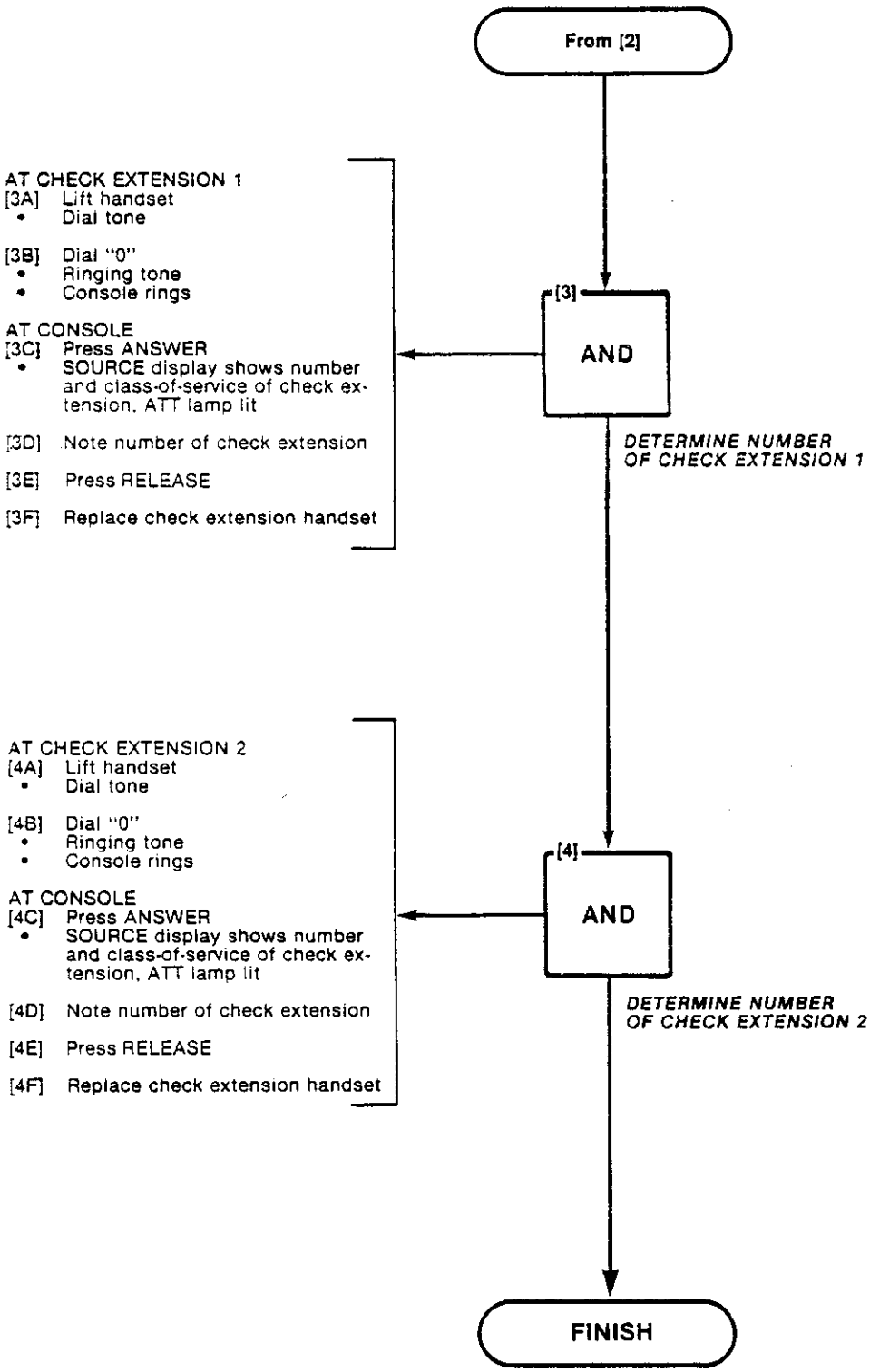

BROKER'S CALL
MAP215-202
Issue 1. August 1981
Sheet 1 of 1

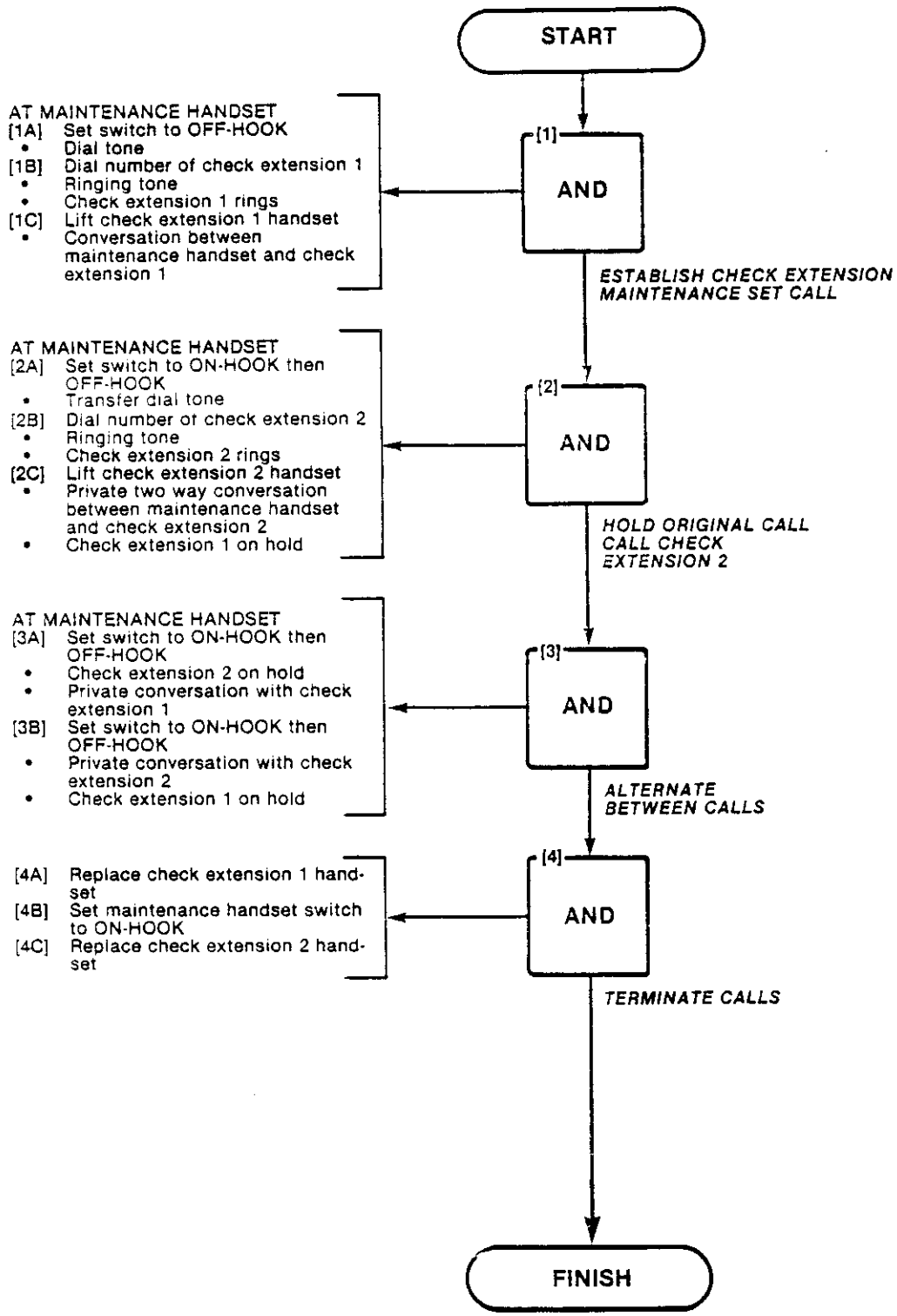

CALL FORWARDING - BUSY
MAP215-203
Issue 1, August 1981
Sheet 1 of 1

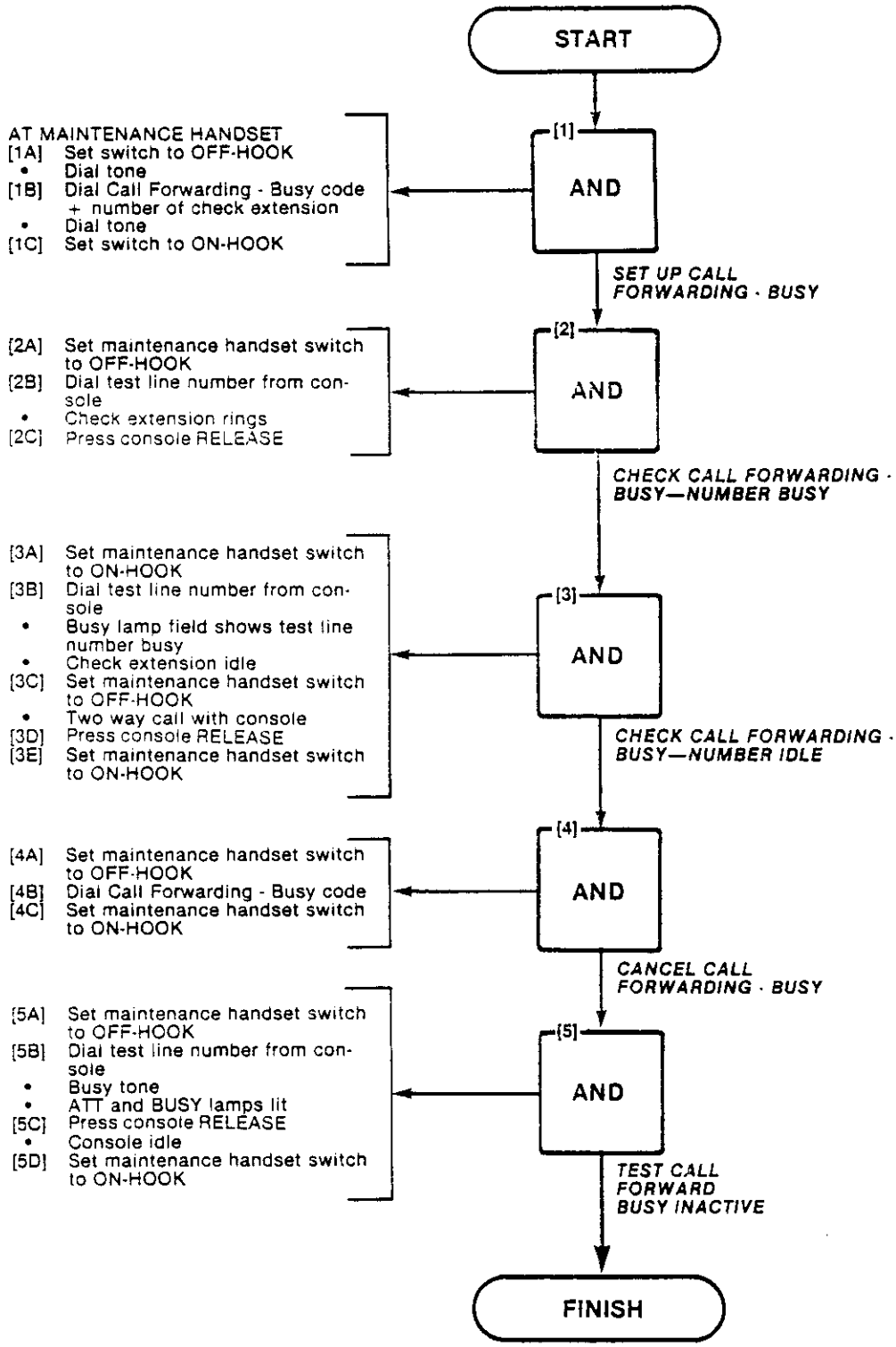

CALL FORWARDING - DON'T ANSWER
MAP215-204
Issue 1, August 1981
Sheet 1 of 1

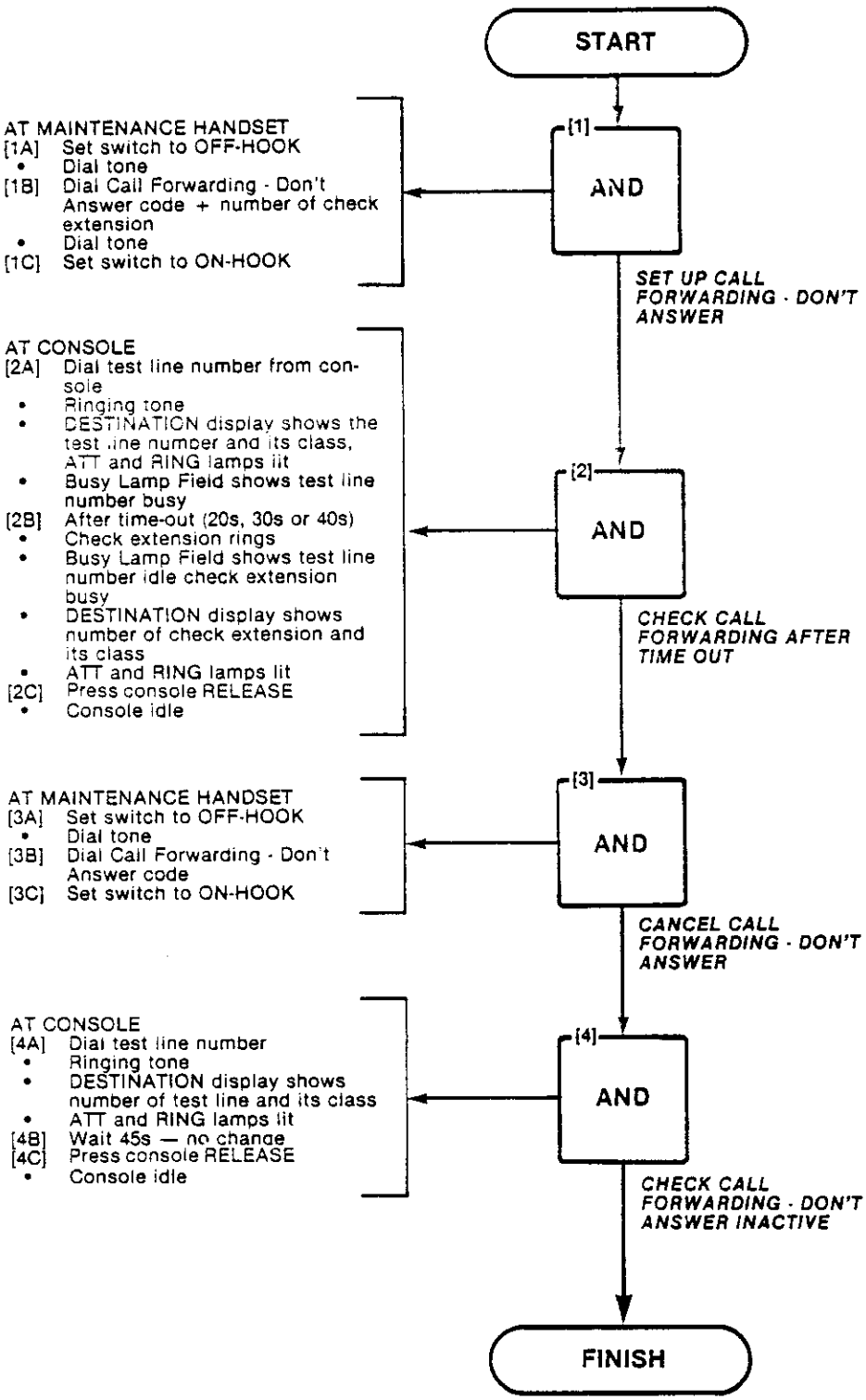

CALL FORWARDING - FOLLOW ME
MAP215-205
Issue 1, August 1981
Sheet 1 of 1

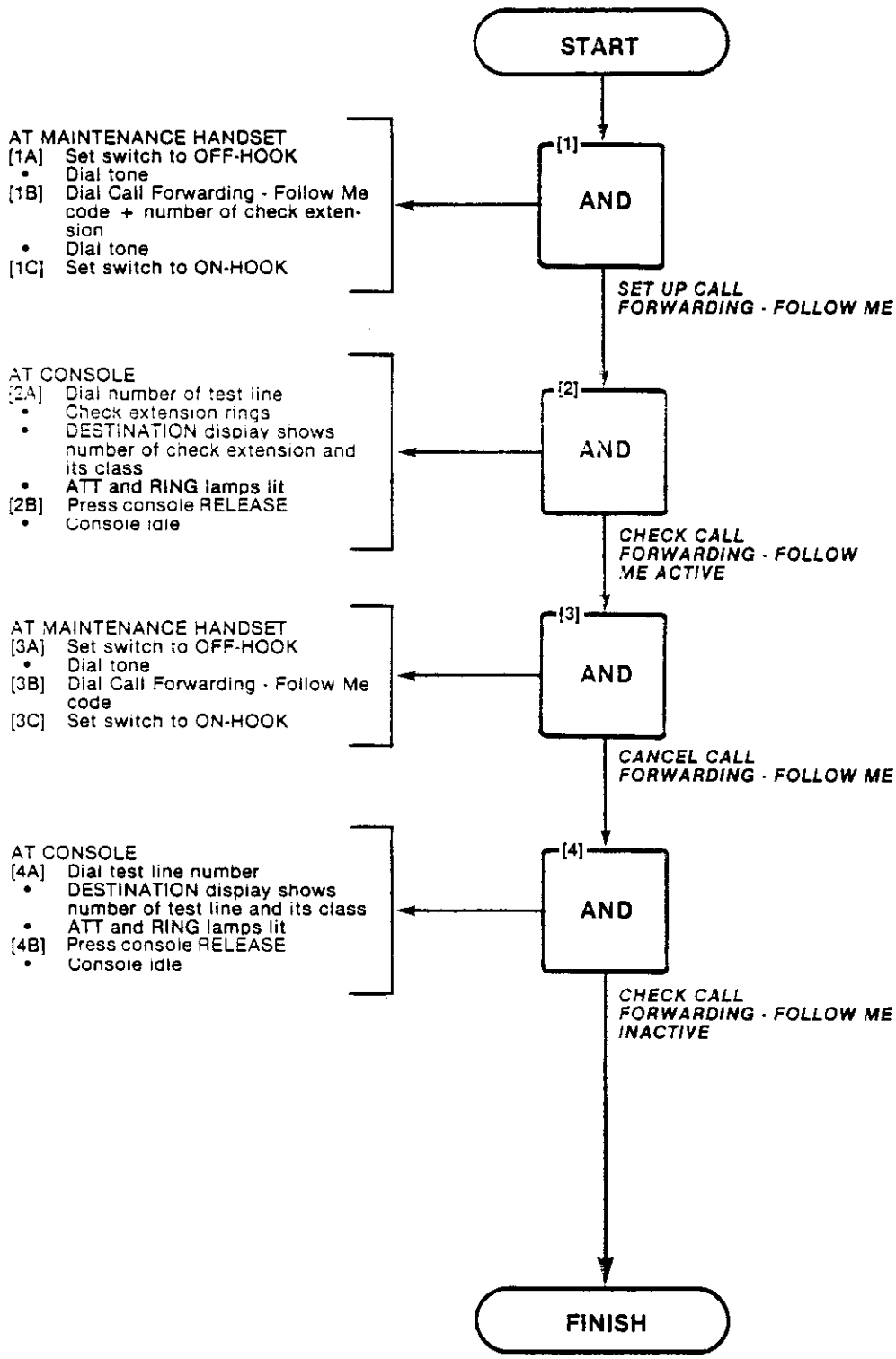

CALL PARK
MAP215-206
Issue 1, August 1981
Sheet 1 of 1

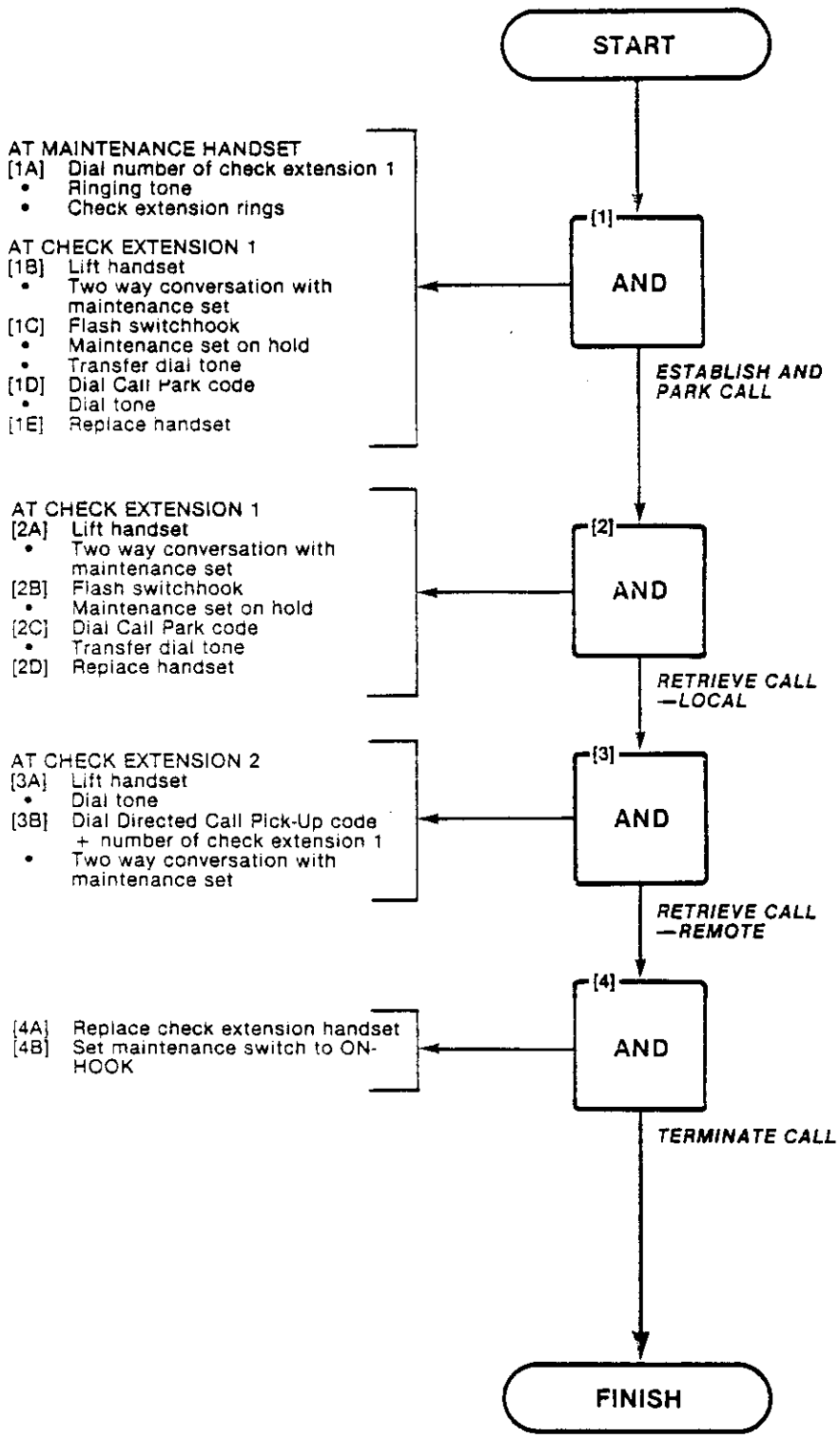

CALL PICK-UP
MAP215-207
Issue 1, August 1981
Sheet 1 of 2

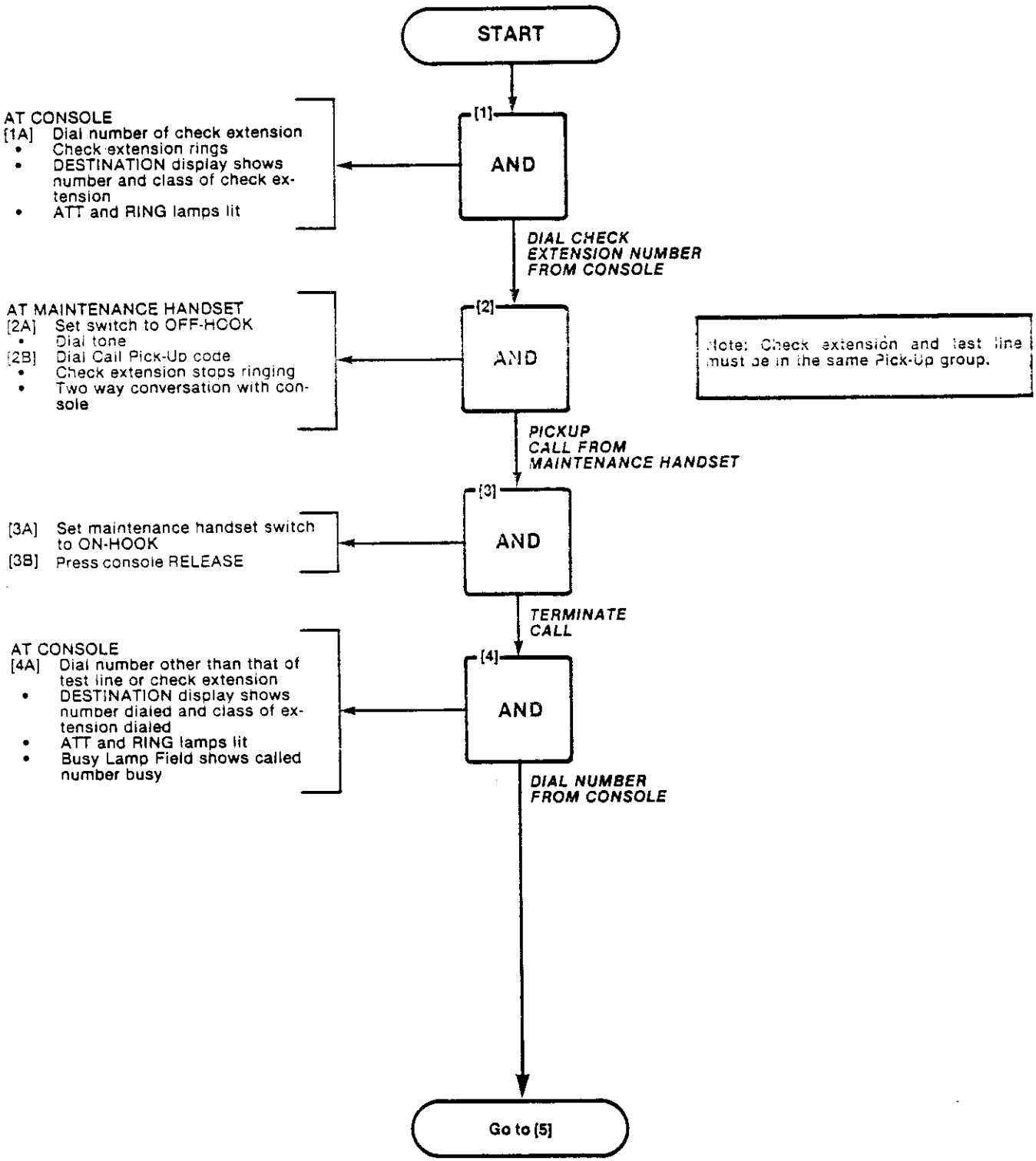

CALL PICK-UP
MAP215-207
Issue 1, August 1981
Sheet 2 of 2

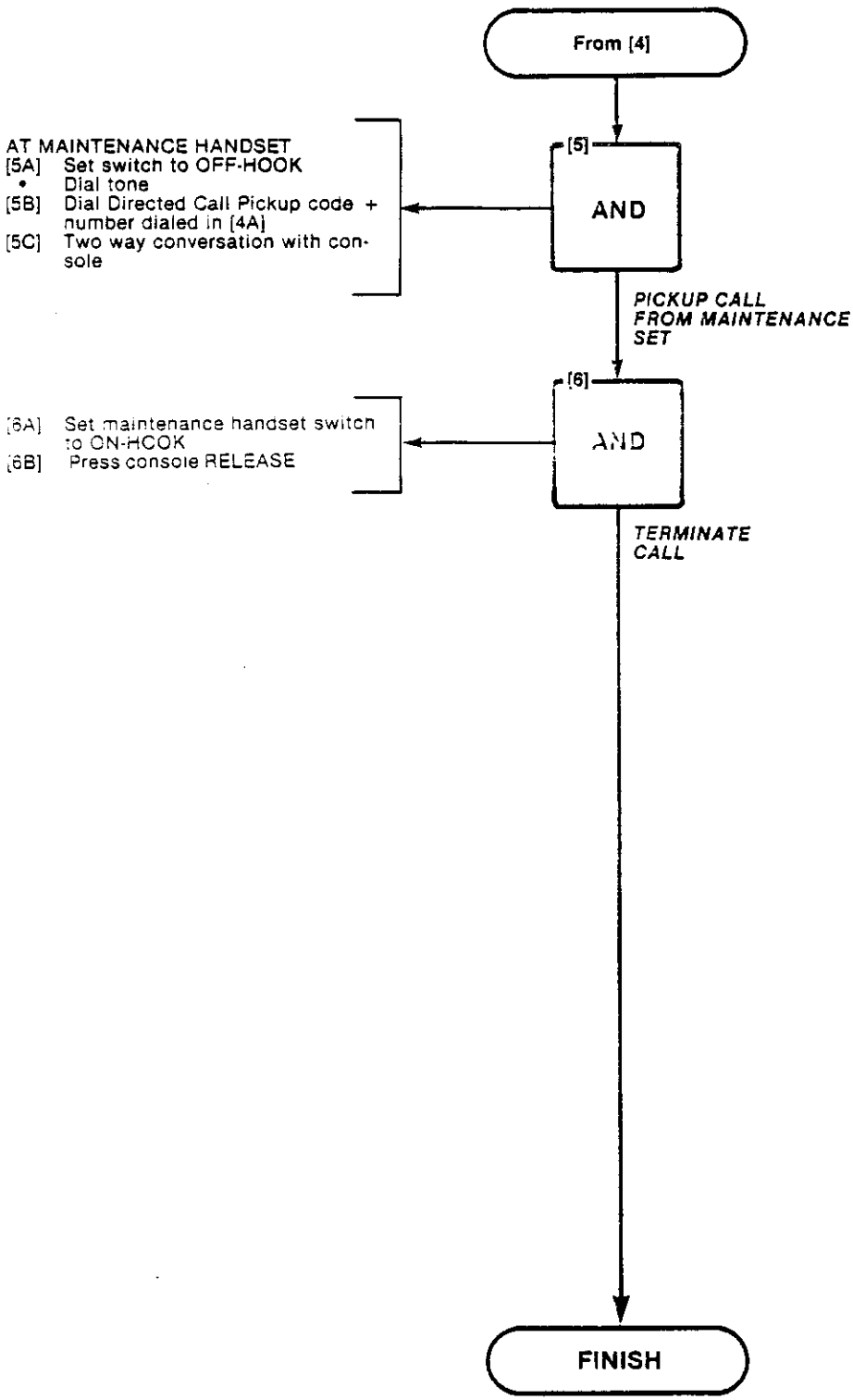

CAMP-ON
MAP215-208
Issue 1, August 1981
Sheet 1 of 1

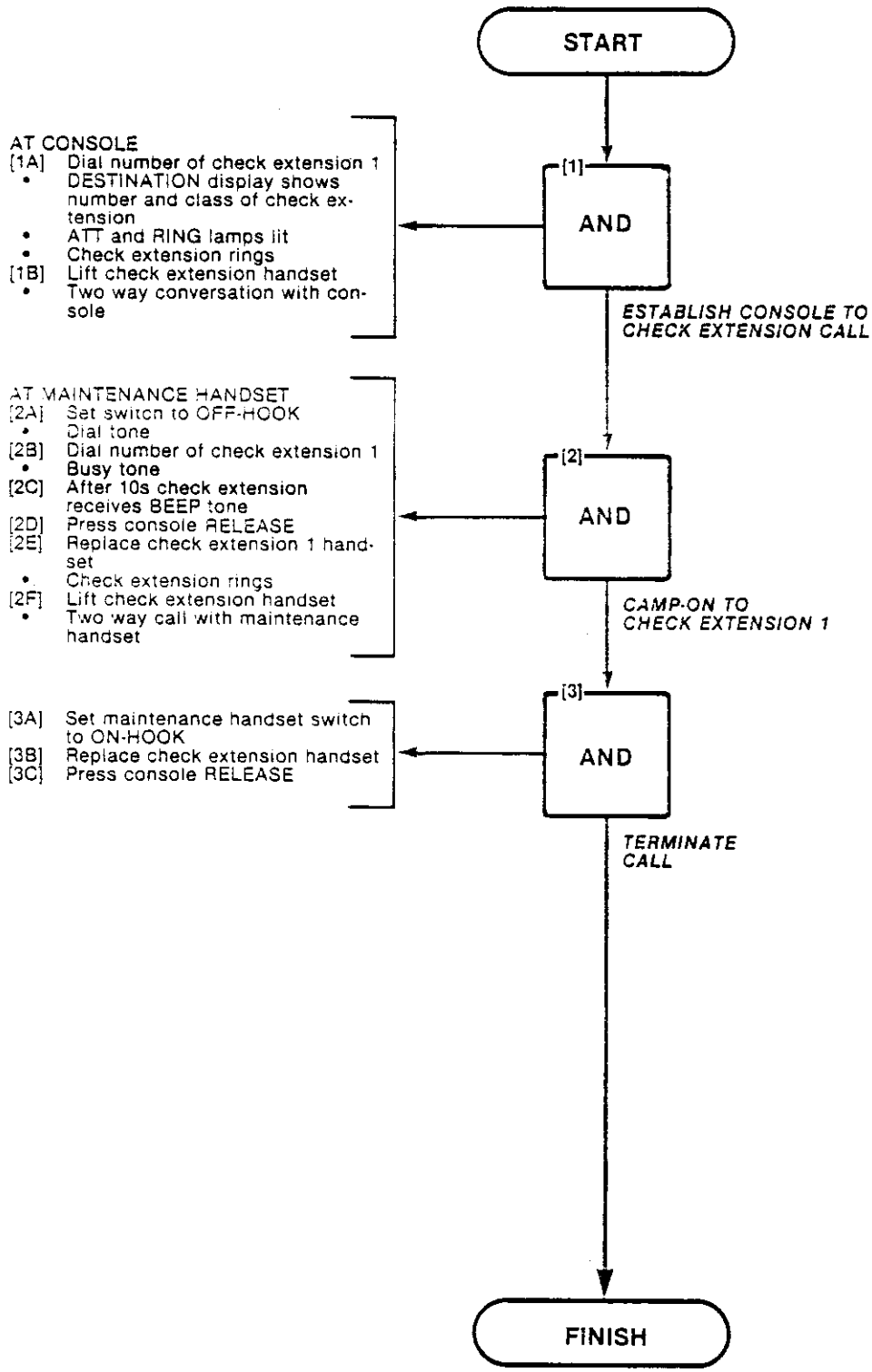

CONSULTATION HOLD/TRANSER/ADD-ON
MAP215-209
Issue 1, August 1981
Sheet 1 of 1

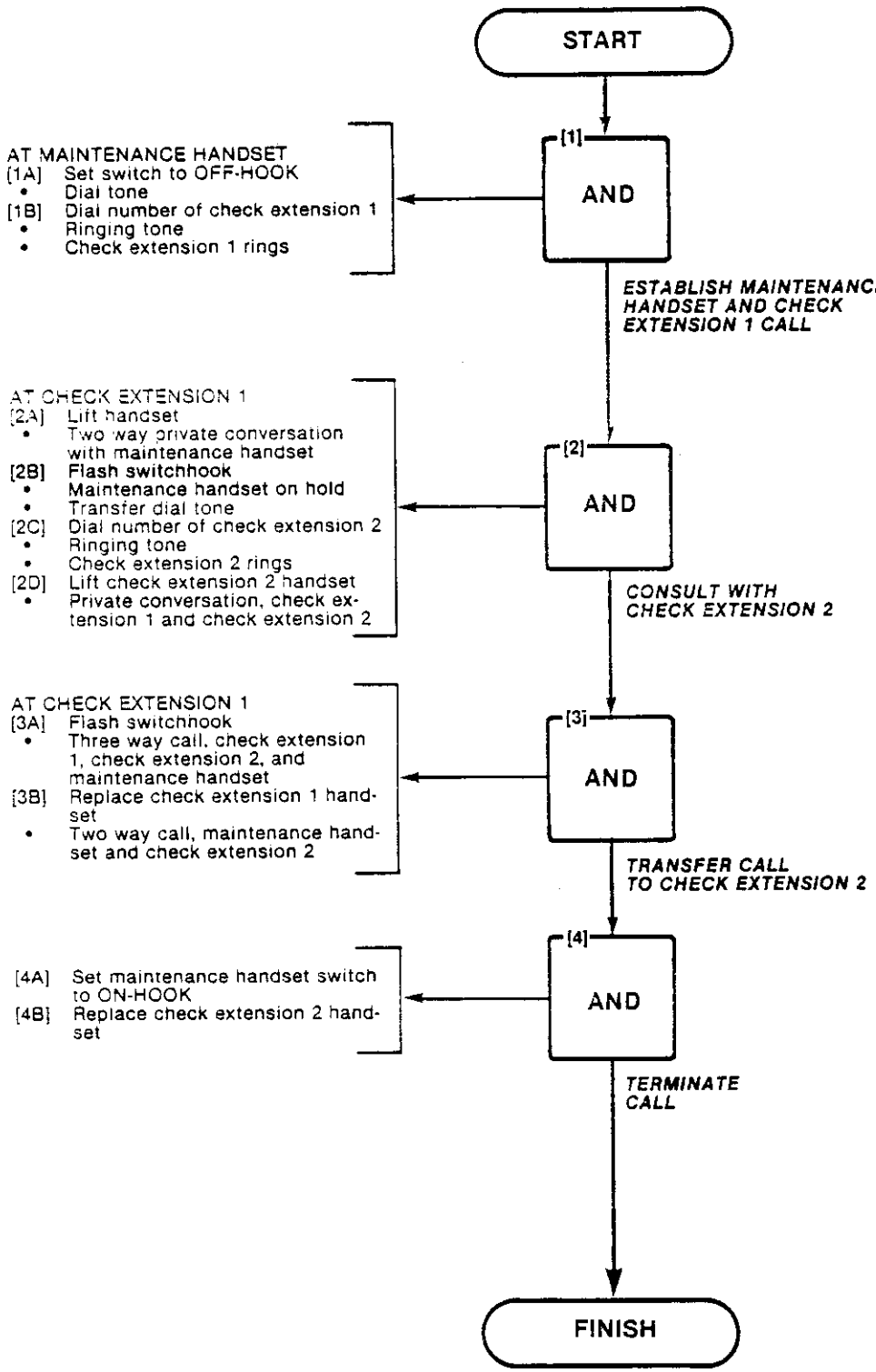

AUTOMATIC CALLBACK - DON'T ANSWER
MAP215-210
Issue 2. February 1982
Sheet 1 of 1

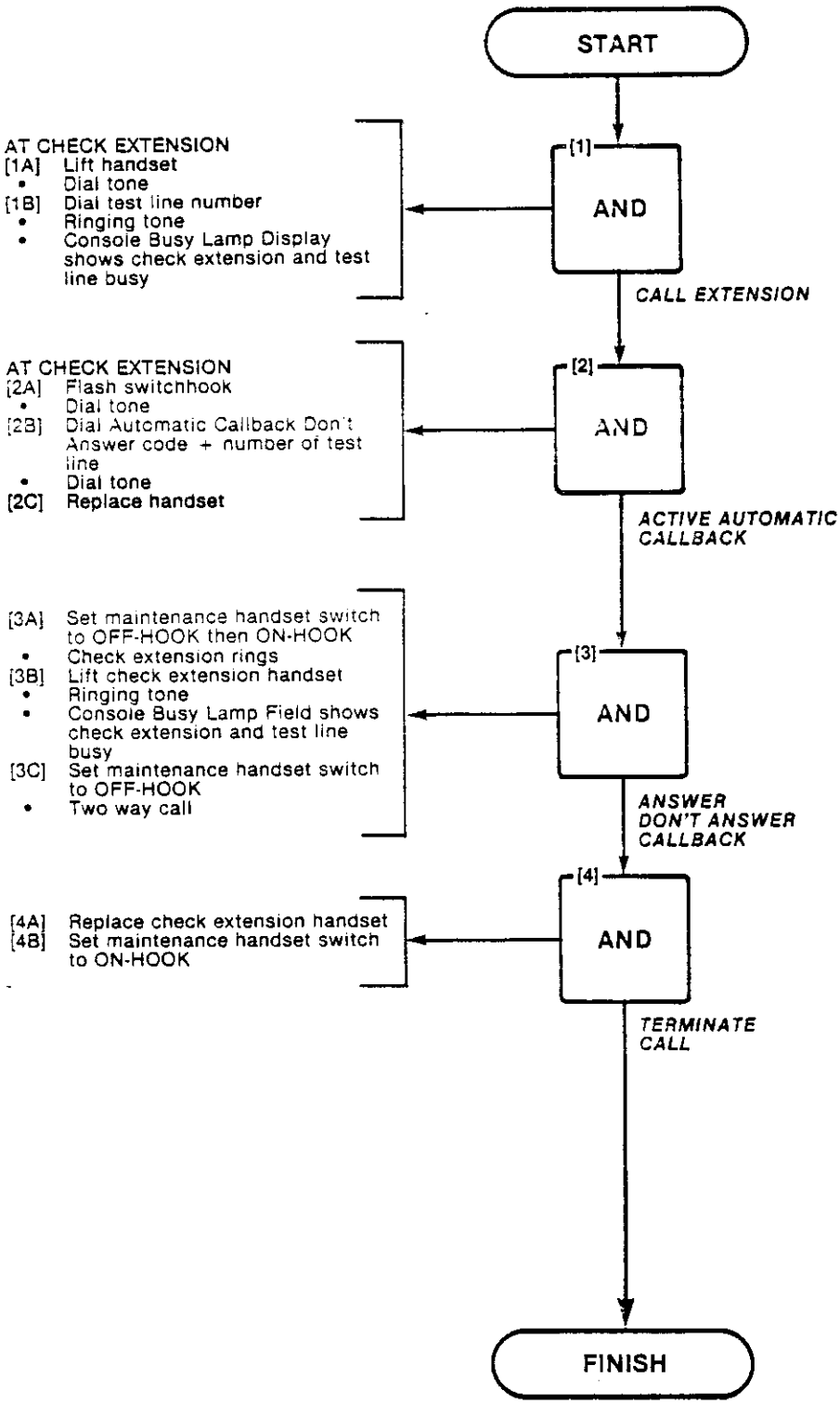

AUTOMATIC CALLBACK - BUSY
MAP215-211
Issue 2. February 1982
Sheet 1 of 1

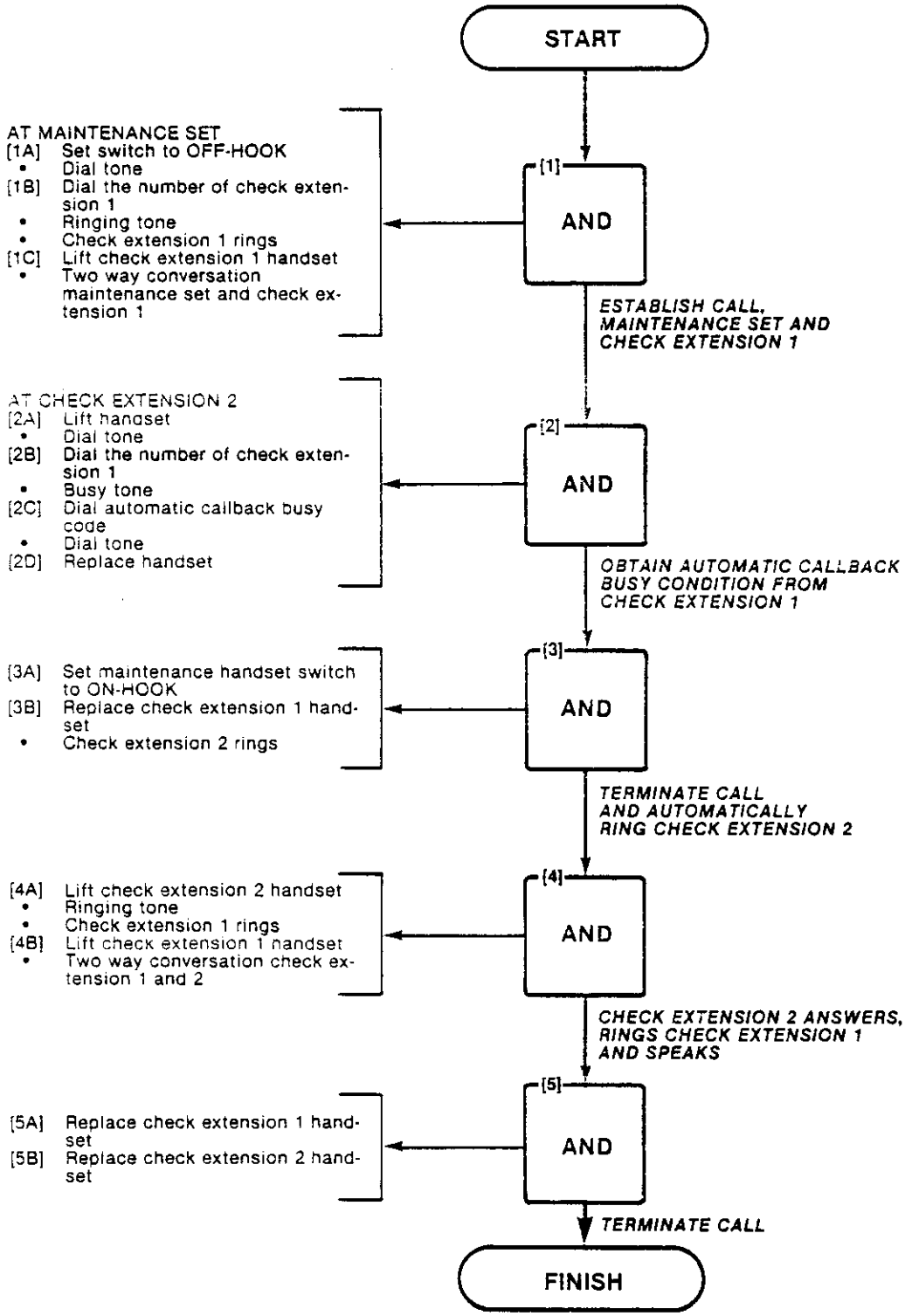

MEET-ME CONFERENCE
MAP215-212
Issue 1, August 1981
Sheet 1 of 1

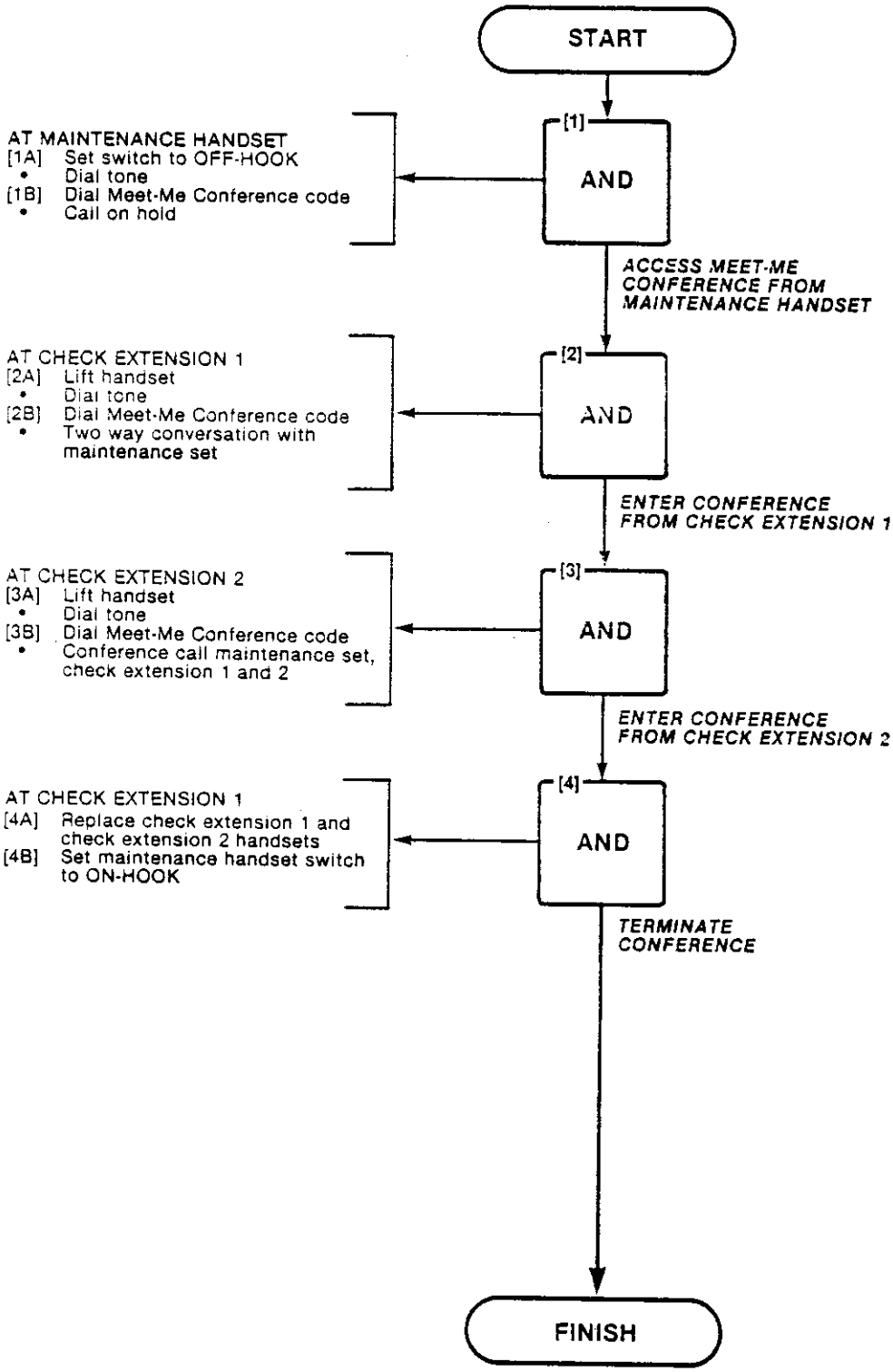

EXECUTIVE BUSY OVERRIDE
MAP215-213
Issue 2, February 1982
Sheet 1 of 1

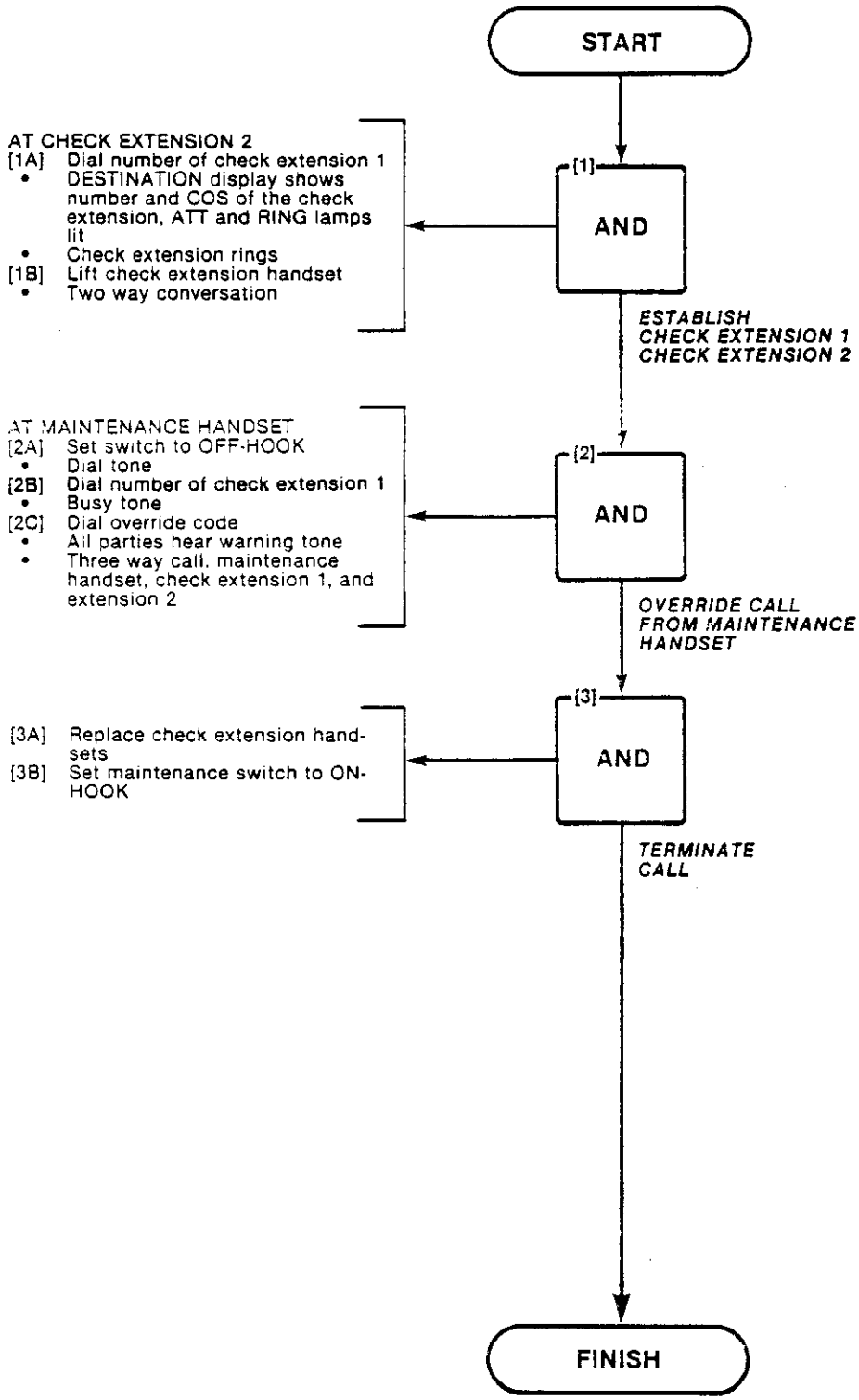

PAGING
MAP215-214
Issue 1, August 1981
Sheet 1 of 1

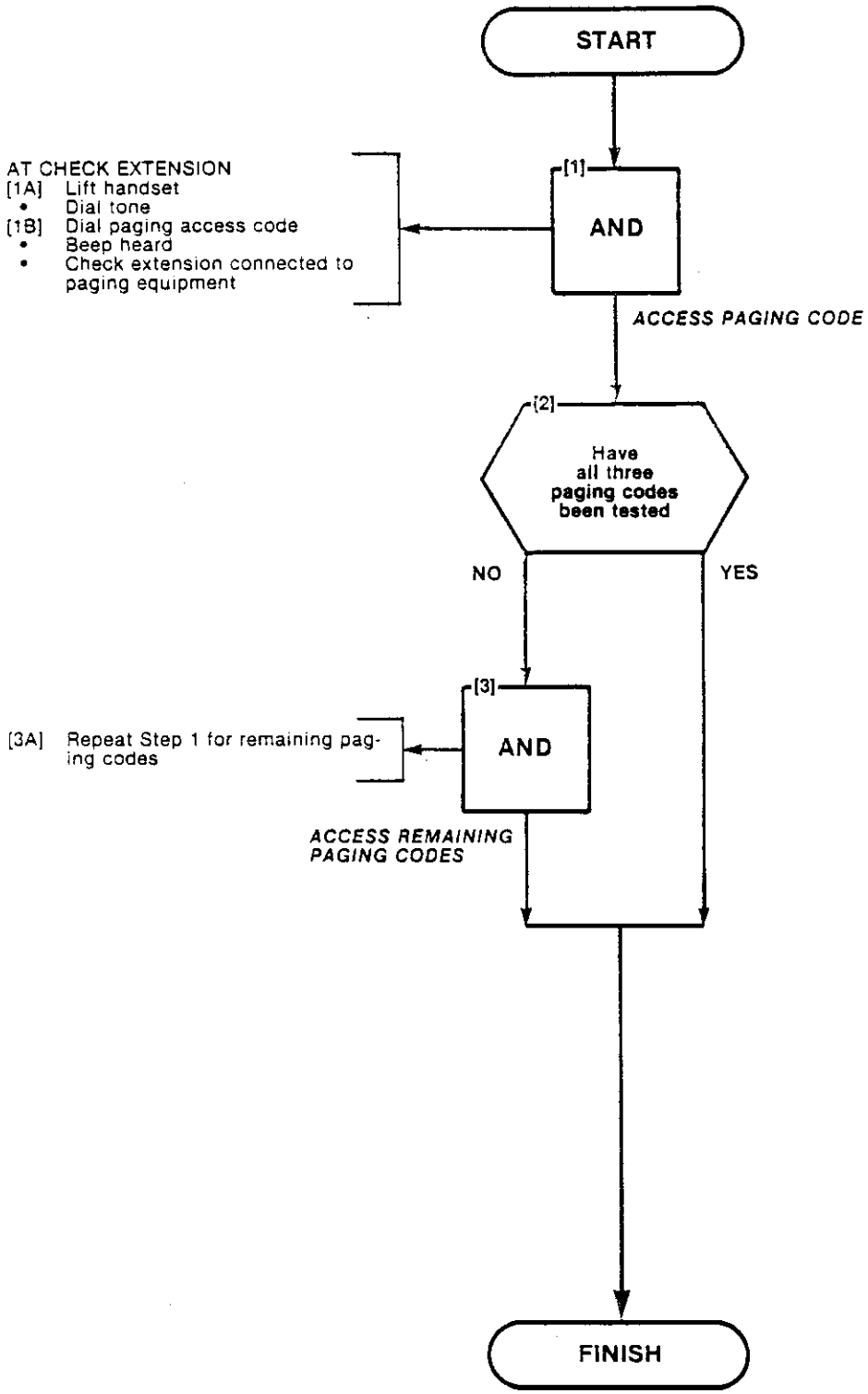

DO NOT DISTURB
MAP215-215
Issue 1, August 1981
Sheet 1 of 1

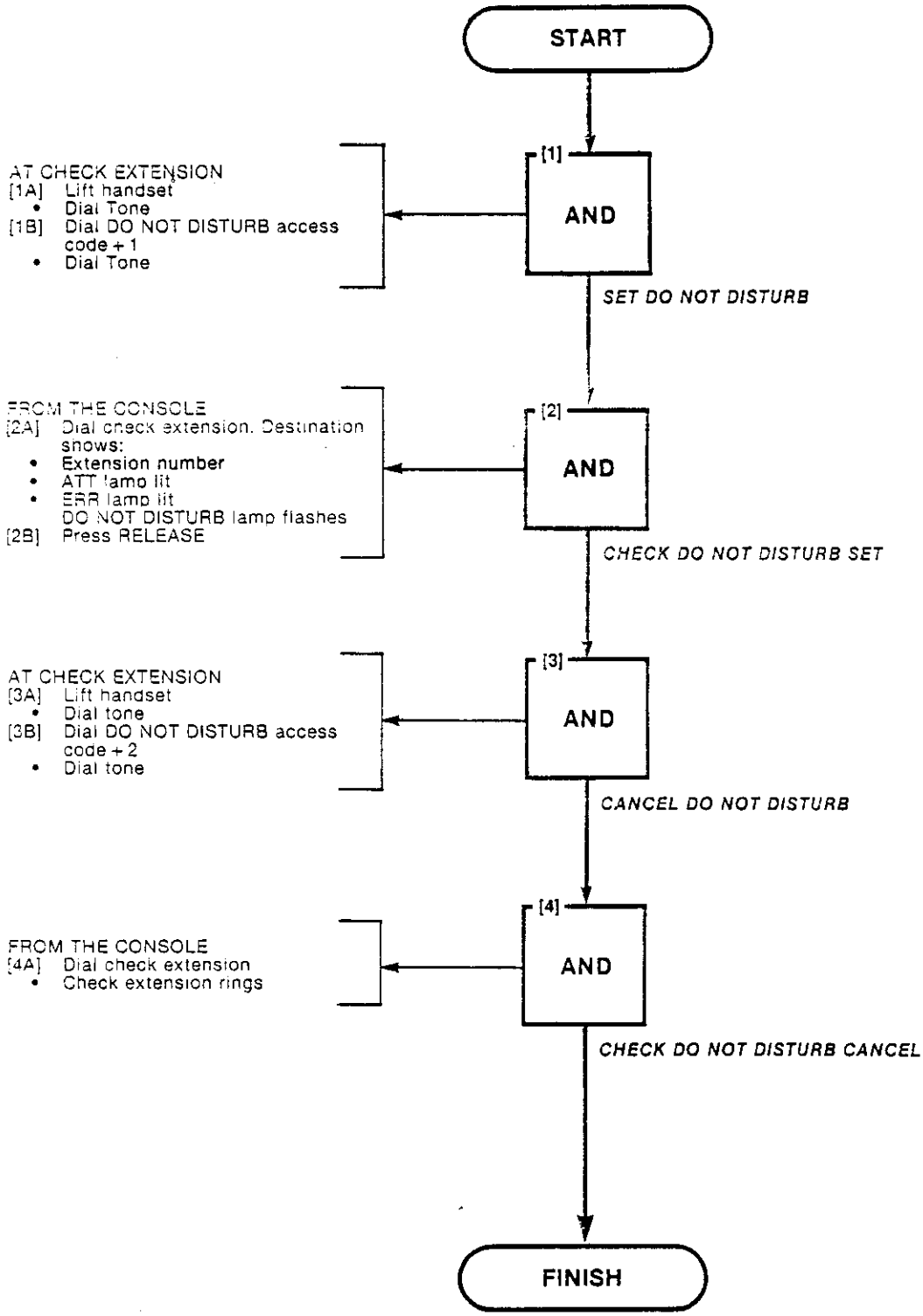

CALL HOLD
MAP215-216
Issue 2, February 1982
Sheet 1 of 3

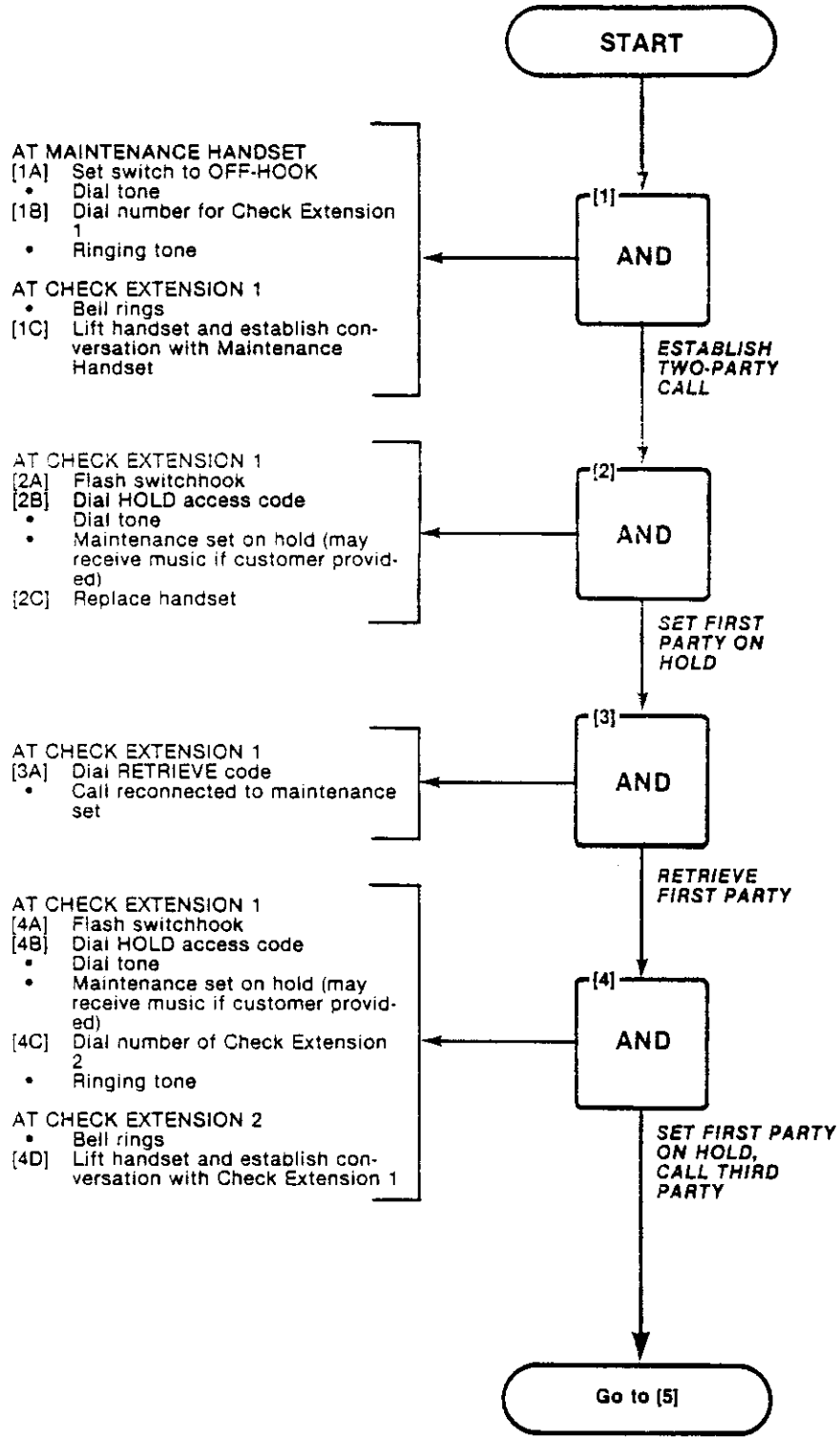

CALL HOLD
MAP215-216
Issue 2, February 1982
Sheet 2 of 3

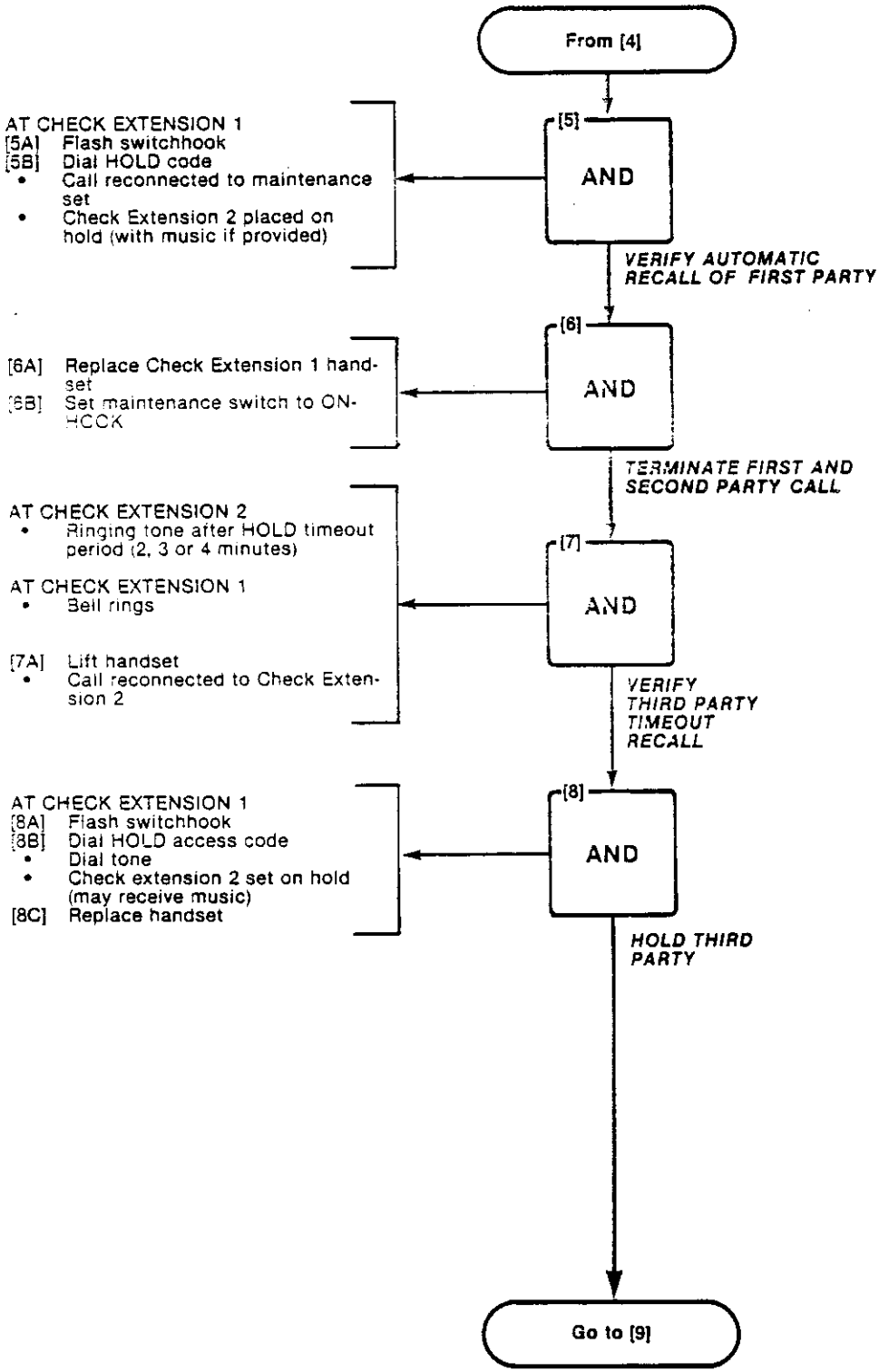

CALL HOLD
MAP215-216
Issue 2, February 1982
Sheet 3 of 3

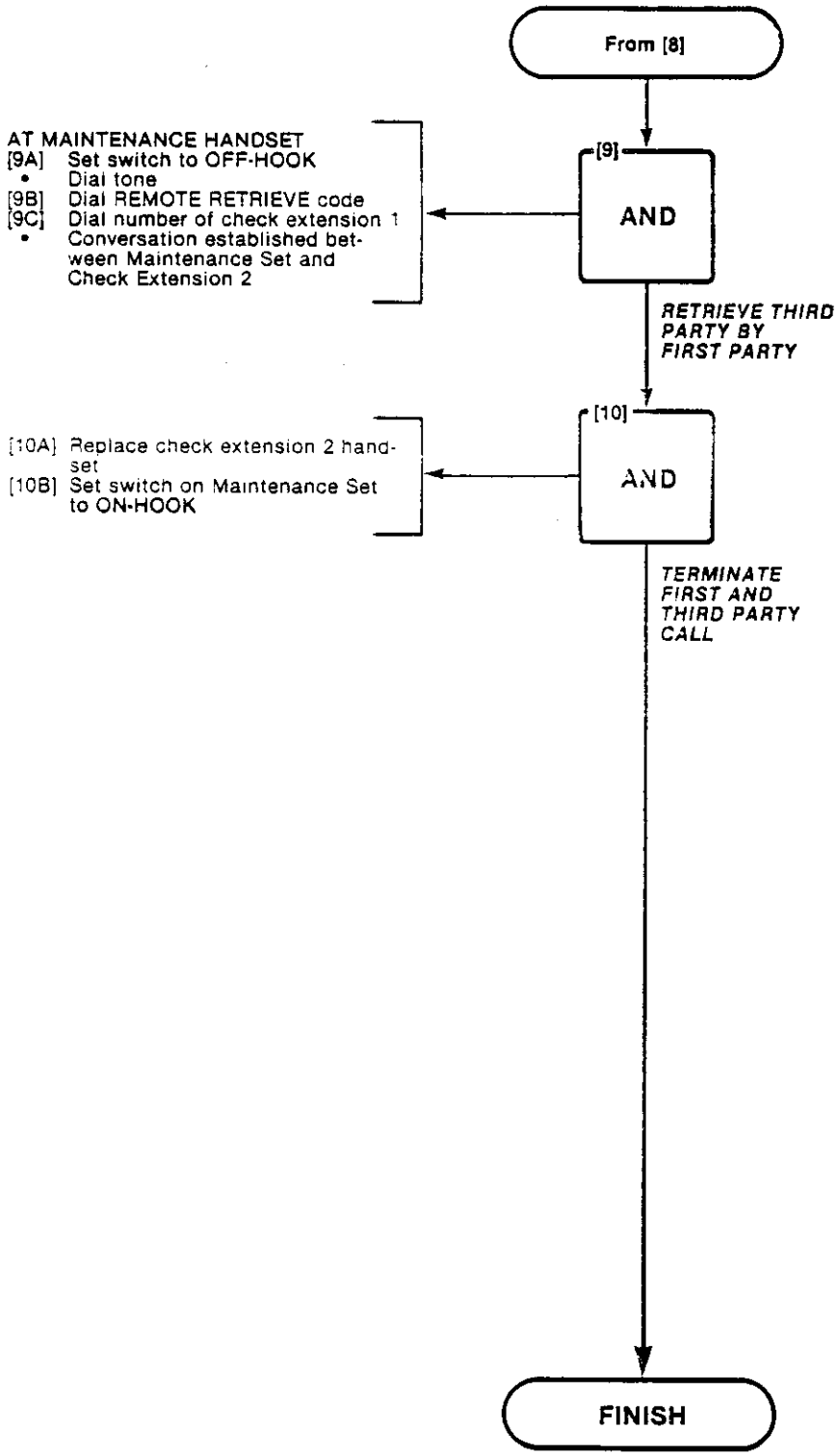

ROOM STATUS
MAP215-217
Issue 1, August 1981
Sheet 1 of 1

SYNOPSIS
The maid may update the Room Status from the room.

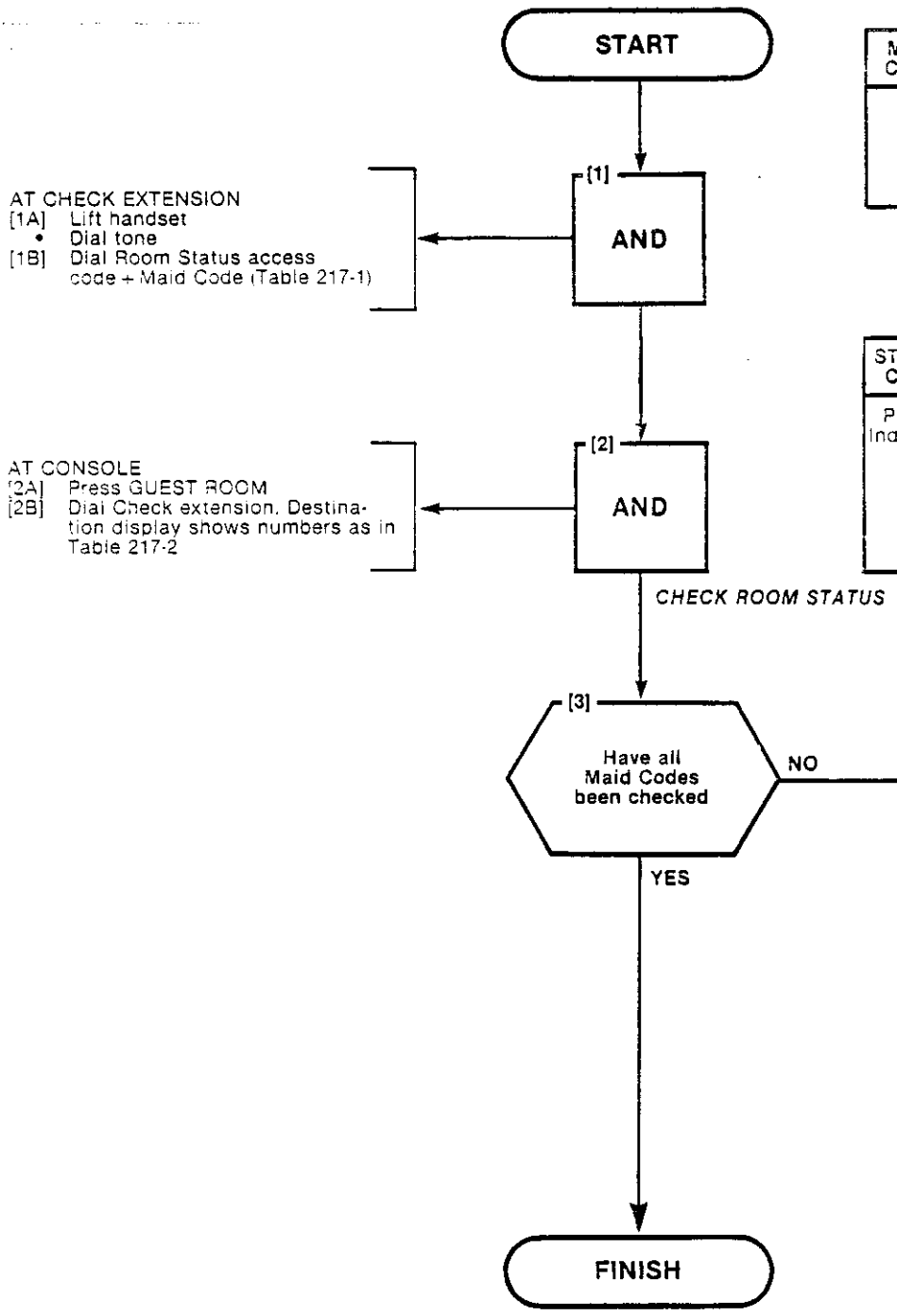

TABLE 217-1
MAID DIALED CODES

MAID CODE	INDICATION
1	Maid in Room, Requires Cleaning
2	Maid left Room, Status Unchanged
3	Maid left Room, Room Ready

TABLE 217-2
ROOM STATUS CODES

STATUS CODE	STATUS
Period Indicates	Maid in room
1	Room vacant and ready
2	Room occupied and clean
3	Room vacant, requires cleaning
4	Room occupied, requires cleaning

AUTOMATIC WAKE-UP (ALARM CALL)
MAP215-218
Issue 2, February 1982
Sheet 1 of 1

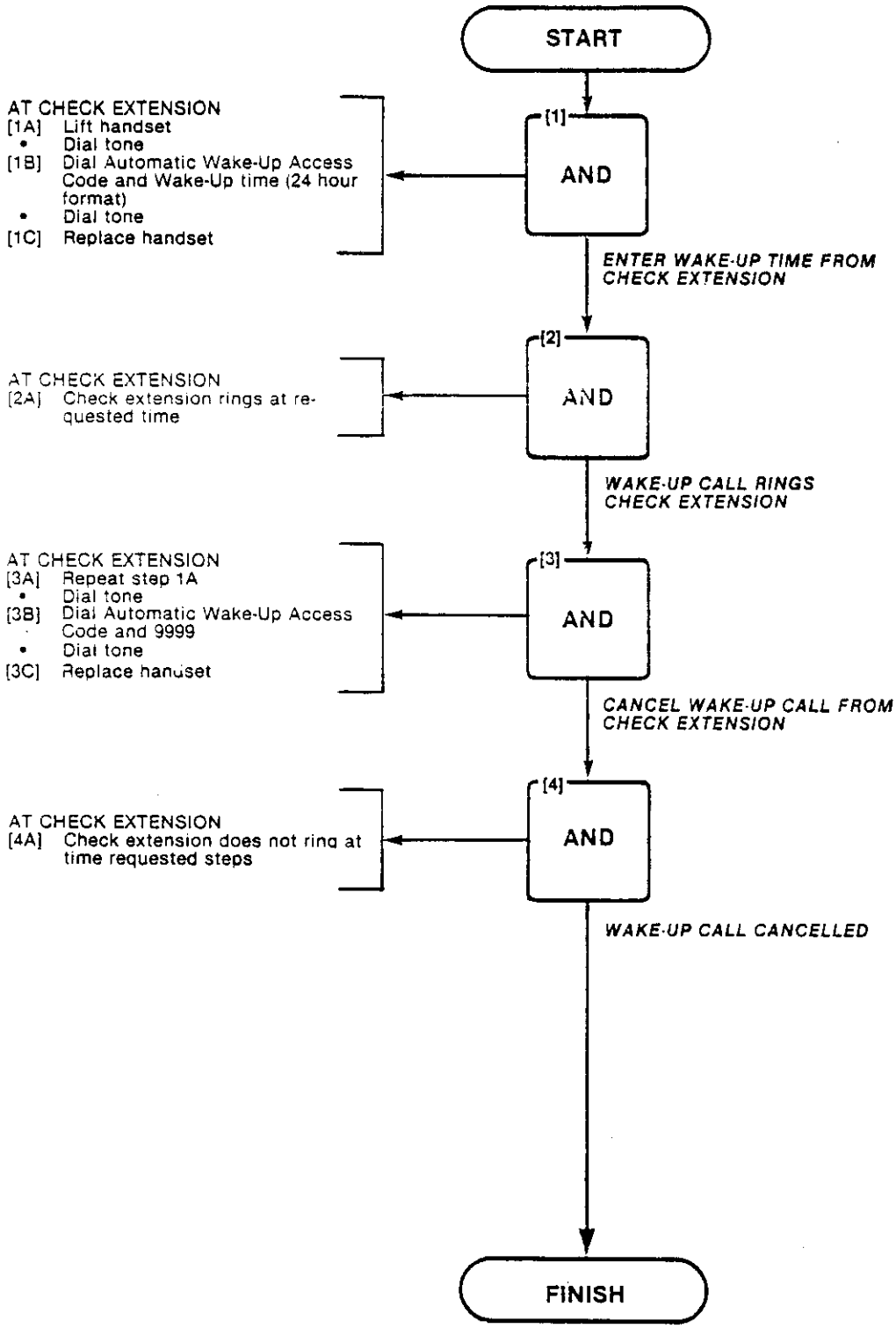

USE A COMMON USE SPEED CALL
MAP215-219
Issue 1, August 1981
Sheet 1 of 1

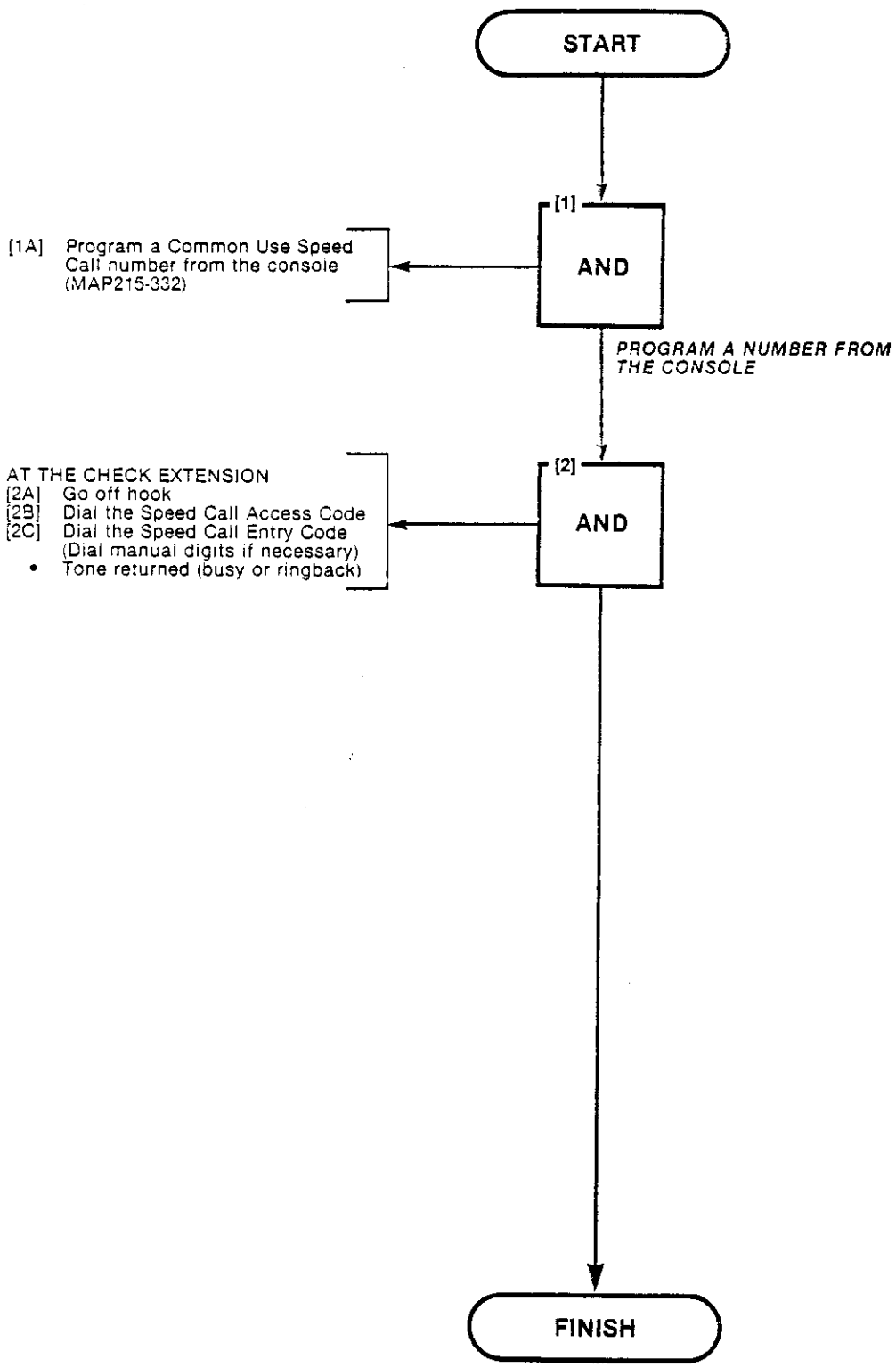

PERSONAL SPEED CALL
MAP215-220
Issue 2. February 1982
Sheet 1 of 1

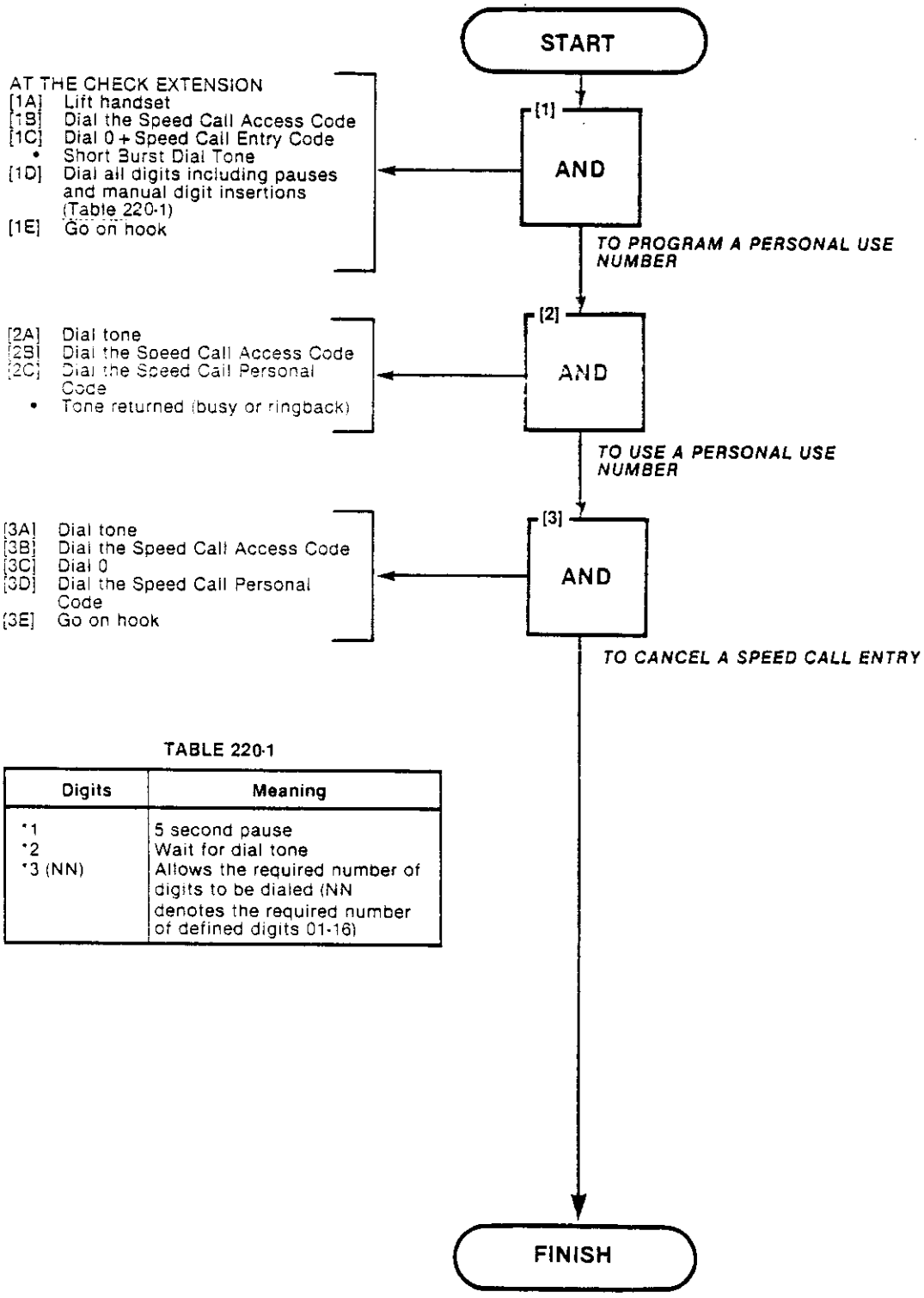

TABLE 220-1

Digits	Meaning
*1	5 second pause
*2	Wait for dial tone
*3 (NN)	Allows the required number of digits to be dialed (NN denotes the required number of defined digits 01-16)

EXTERNAL CALL FORWARDING
MAP215-221
Issue 2, February 1982
Sheet 1 of 1

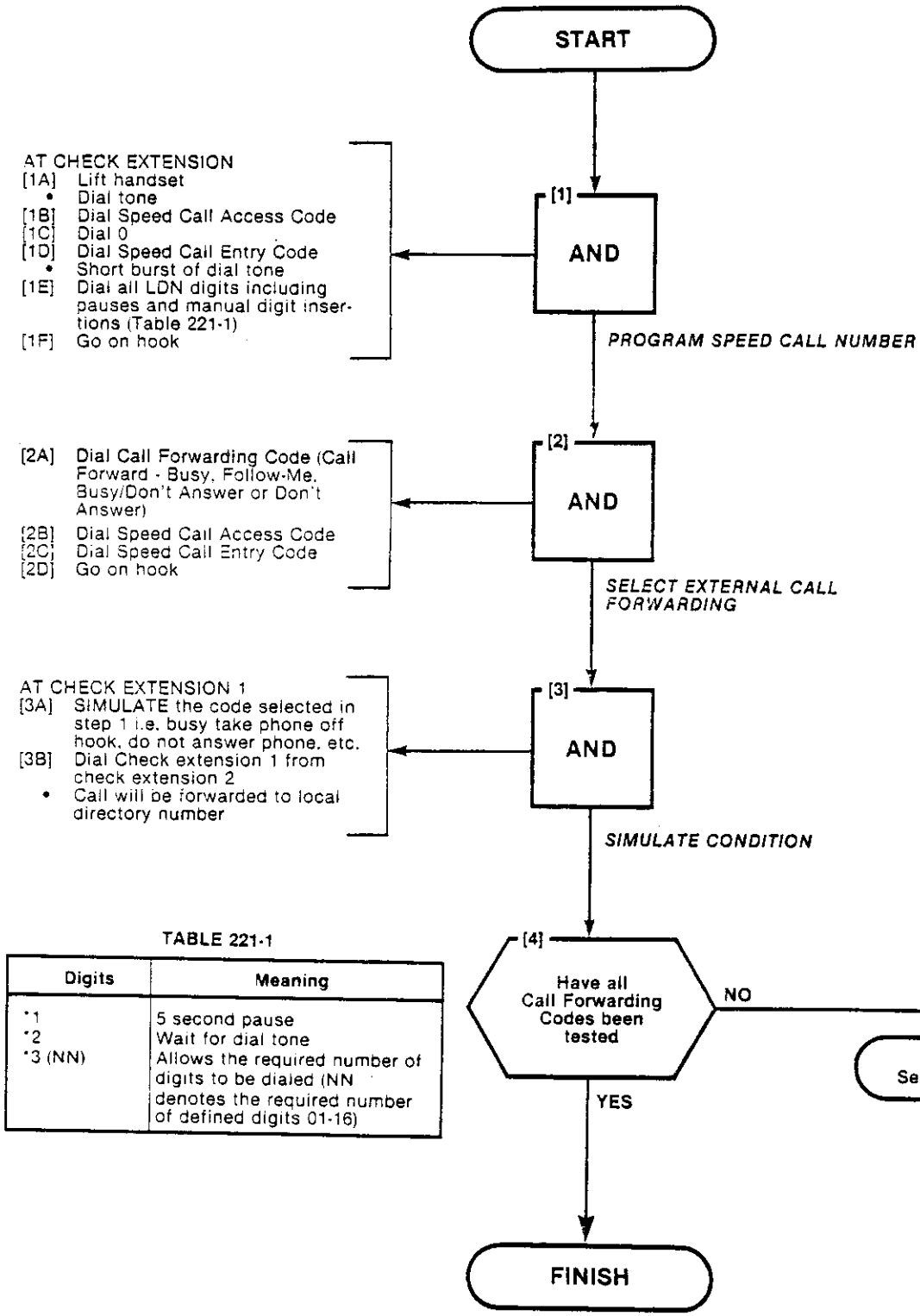

TABLE 221-1

Digits	Meaning
*1	5 second pause
*2	Wait for dial tone
*3 (NN)	Allows the required number of digits to be dialed (NN denotes the required number of defined digits 01-16)

TRANSFER WITH PRIVACY
MAP215-222
Issue 1, August 1981
Sheet 1 of 1

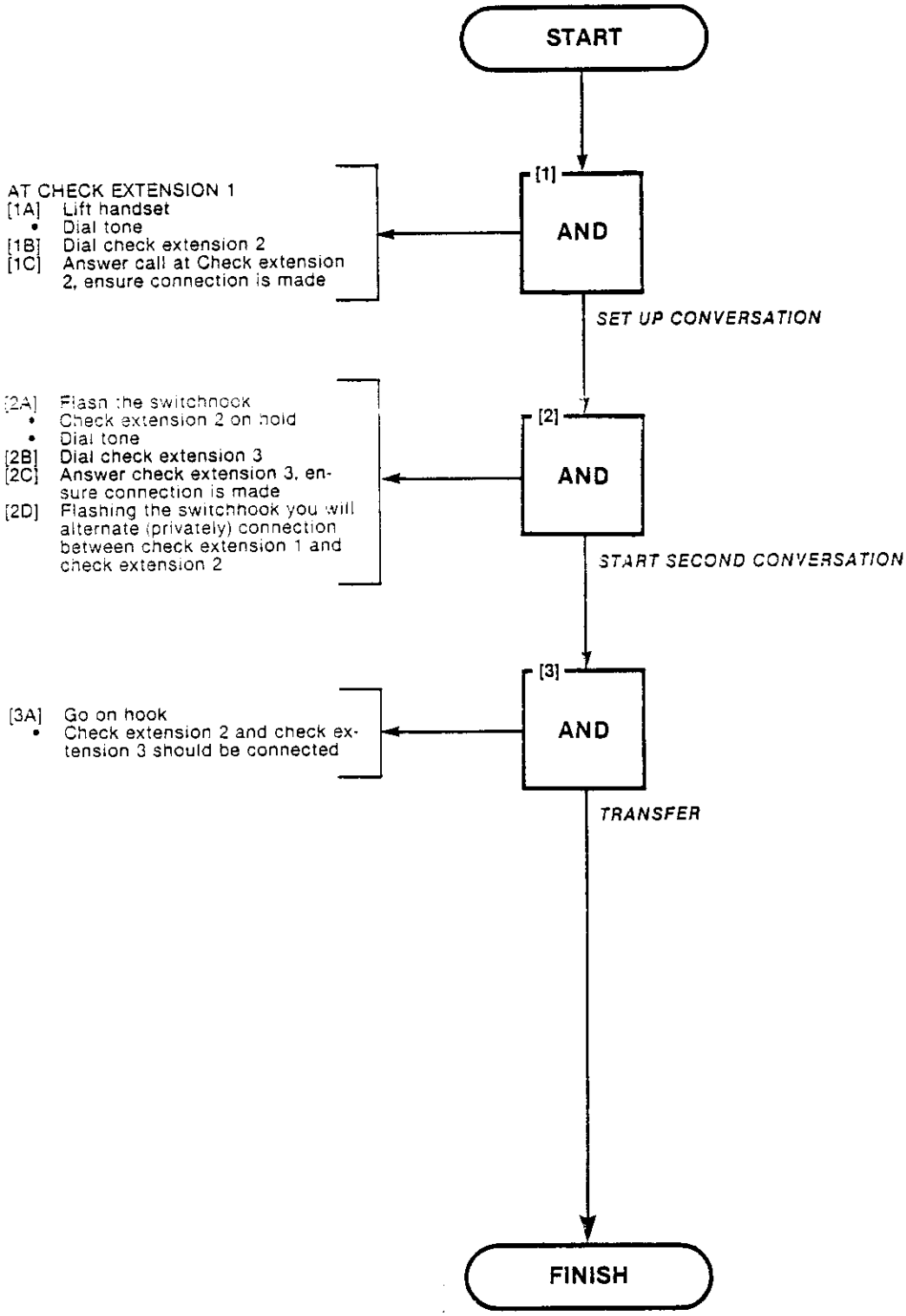

ACCOUNT CODE
MAP215-223
Issue 2, February 1982
Sheet 1 of 2

TOOLS REQUIRED:
1 PRINTER: RS232 COMPATIBLE: 38 characters/line, 300 or 1200 baud

Note
SMDR must be enabled for this test.

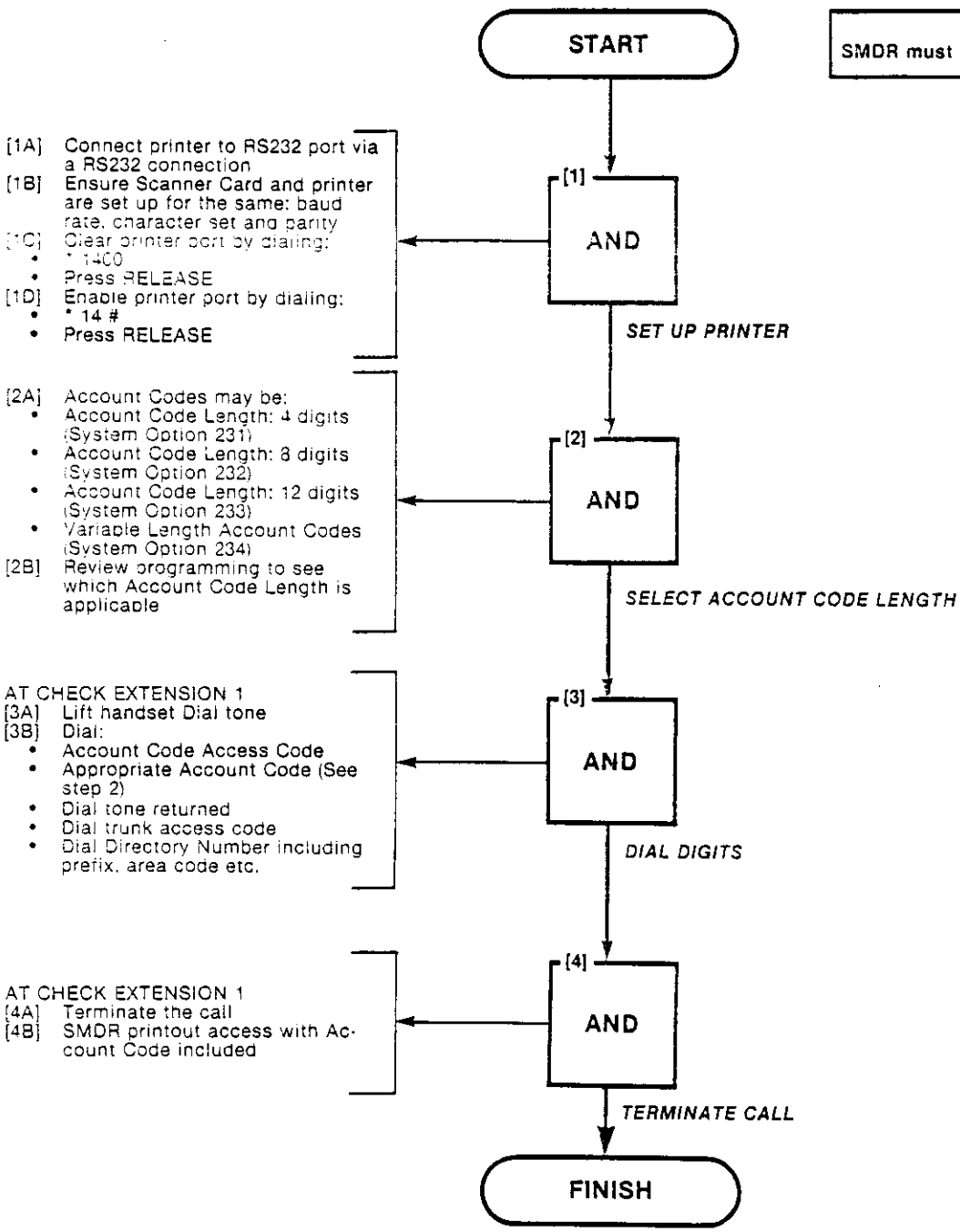

HANDS FREE STATION
MAP215-224
Issue 1, August 1981
Sheet 1 of 1

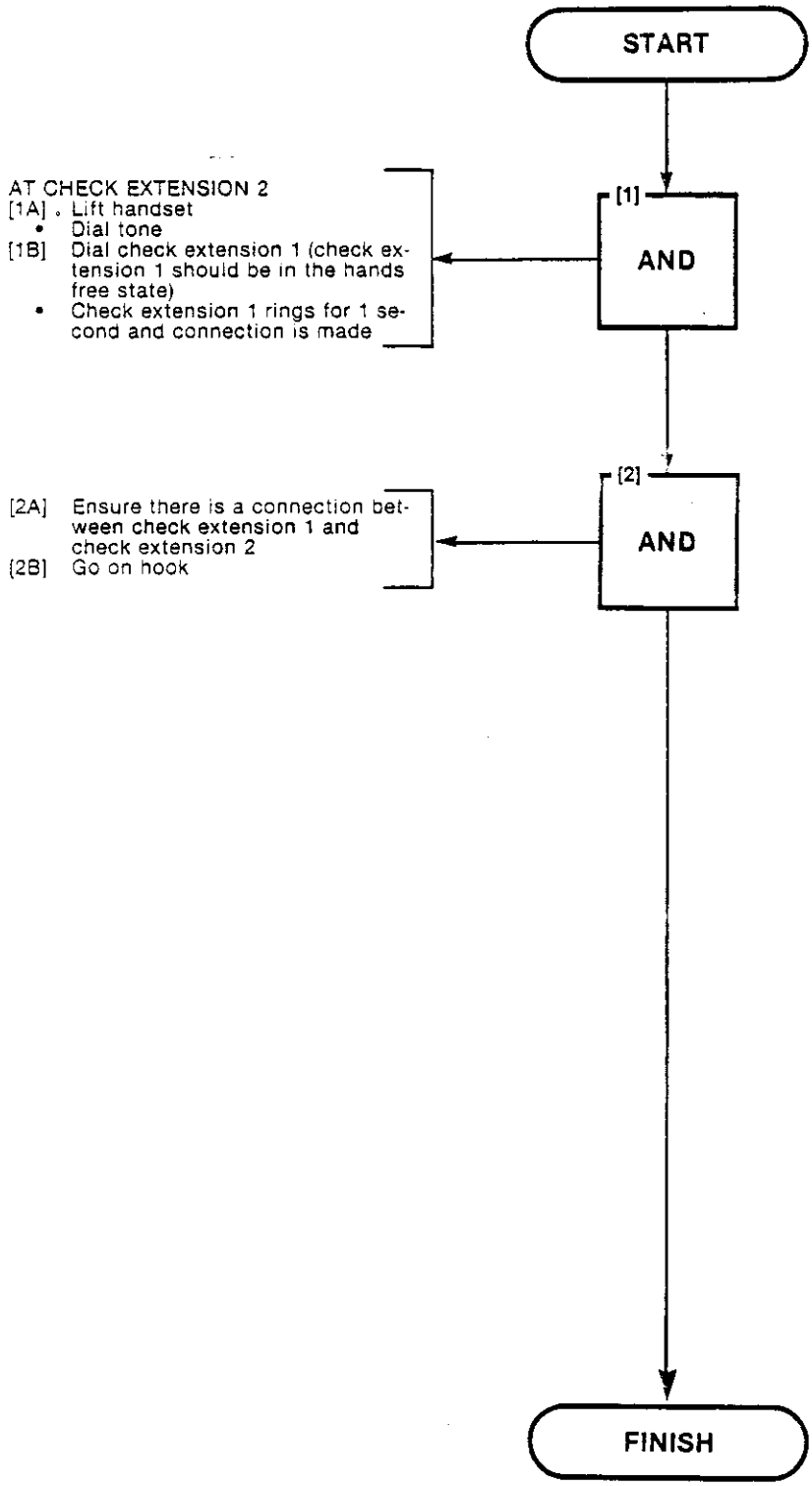

Note
For maximum results check extension 1 should be a speaker phone.

CALL FORWARD BUSY/DON'T ANSWER
MAP215-225
Issue 2, February 1982
Sheet 1 of 2

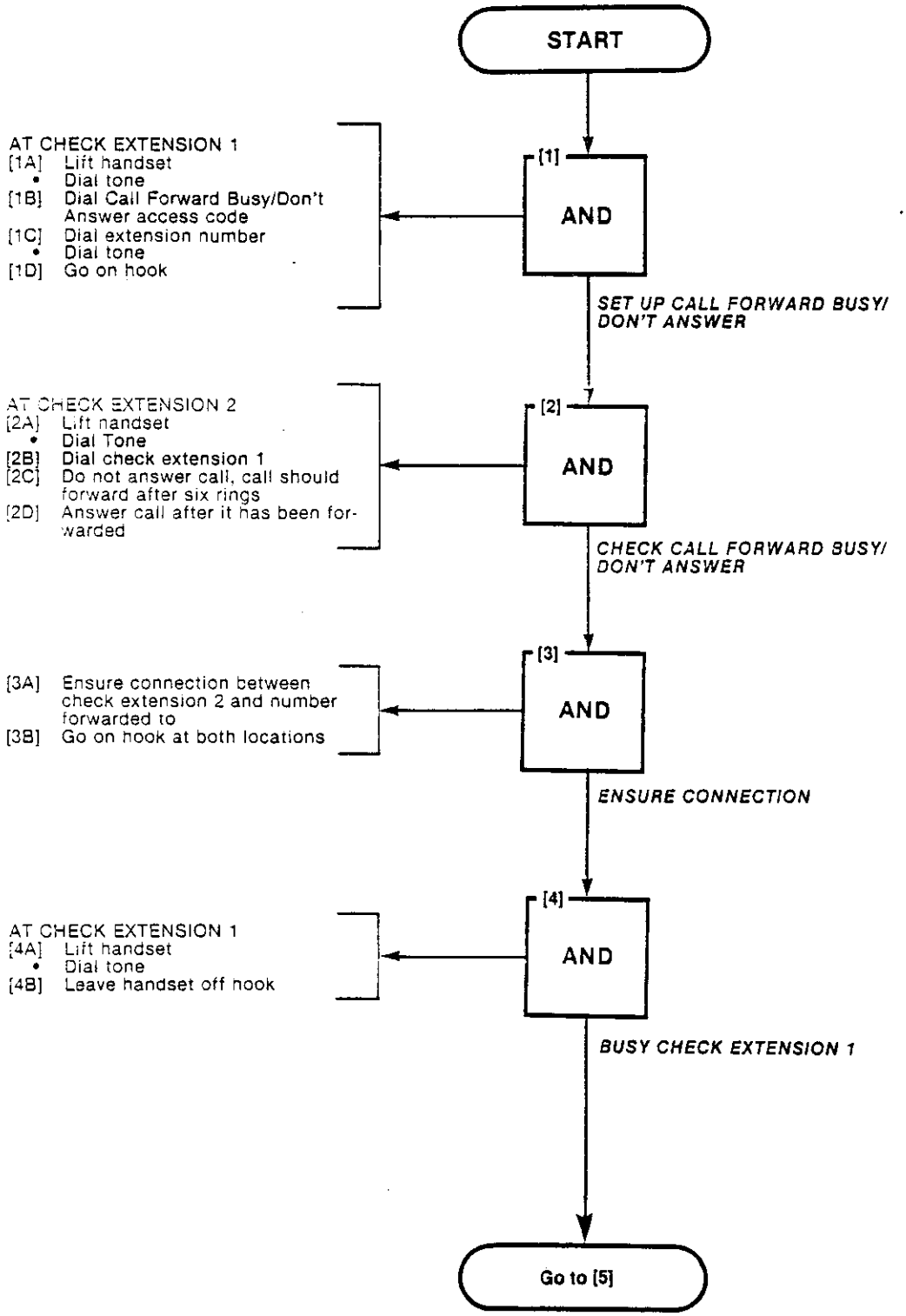

CALL FORWARD BUSY/DON'T ANSWER
MAP215-225
Issue 2, February 1982
Sheet 2 of 2

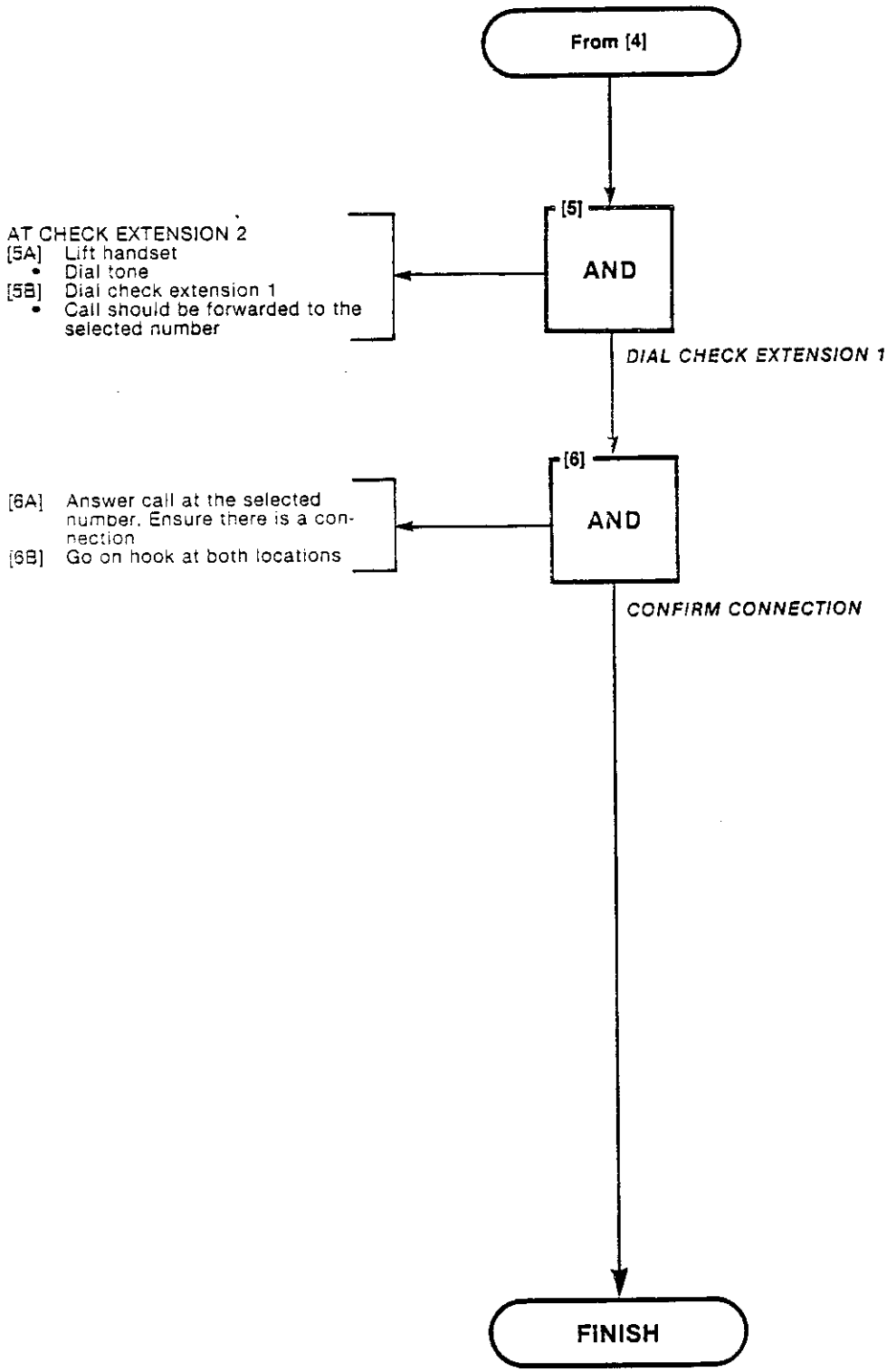

ENABLE NON-CO TRUNK TO TRUNK CONNECT
MAP215-226
Issue 1, August 1981
Sheet 1 of 1

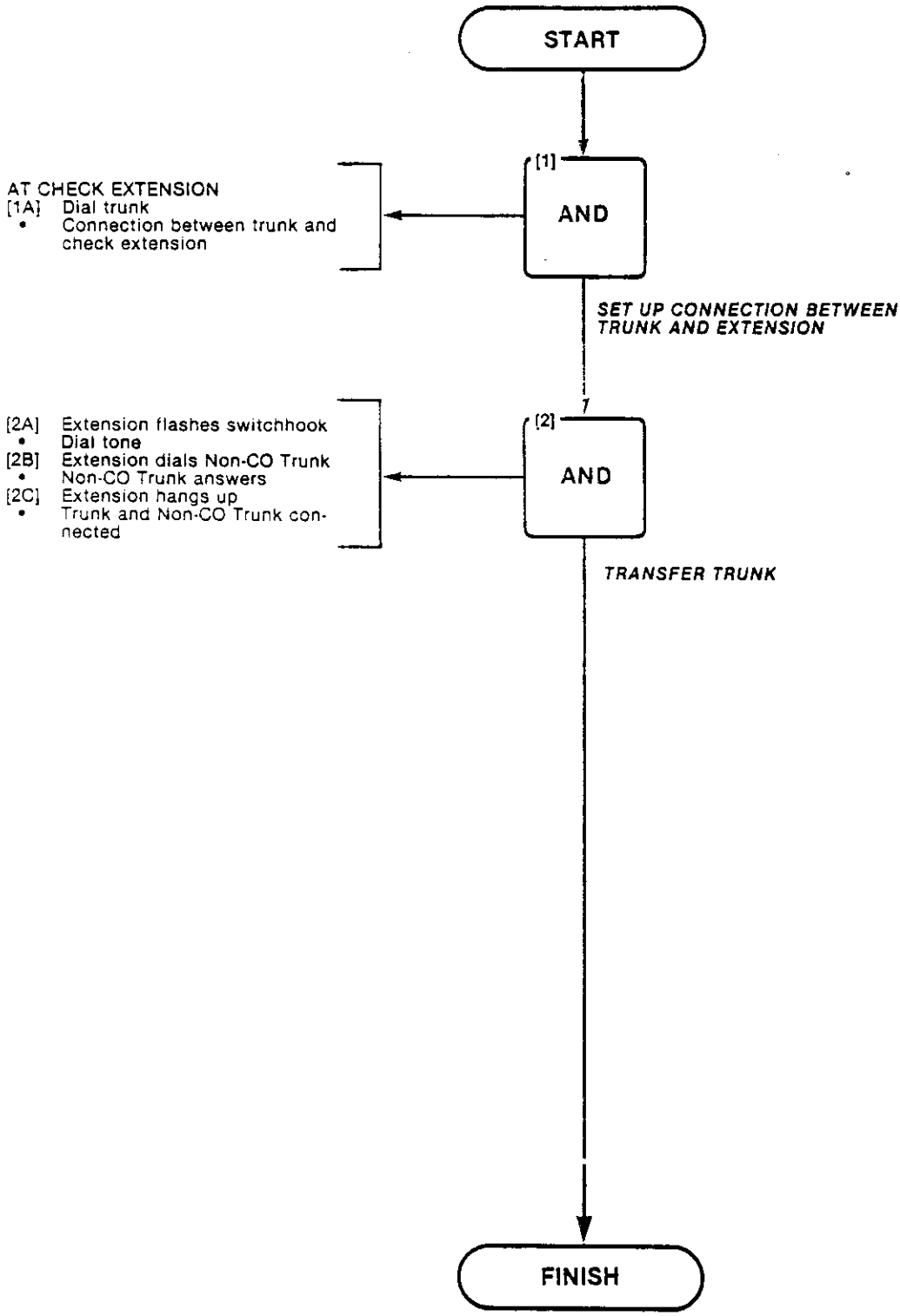

APPENDIX 3
CONSOLE TESTS

A3.01 The following tests are a series of console tests. Specific reference should be made to Table 2-2 and Table 2-4. These Tables will determine the Generic level applicable and if the test is relevant to the system application.

TABLE A3-1 CONSOLE TESTS

ORDER	TEST	MAP No.
1	Answer Incoming Call	215-300
2	Automatic Callback	215-301
3	Extending Internal Calls	215-302
4	Answering Recall	215-303
5	Override	215-304
6	Flexible Night Service	215-305
7	Trunk Busy Operation	215-306
8	Trunk Group Attendant Access	215-307
9	Trunk Group Dial Access	215-308
10	Test Termination	215-309
11	Answer Incoming CO Trunk Call	215-310
12	Attendant Do Not Disturb	215-311
13	Message Waiting	215-312
14	Attendant Call Forwarding - Busy	215-313
15	Attendant Call Forwarding - Don't Answer	215-314
16	Attendant Call Forwarding - Follow Me	215-315
17	Attendant Call Forwarding Busy/Don't Answer	215-316
18	Attendant Controlled Conference	215-317
19	Attendant Station Busy Out	215-318
20	Block	215-319
21	Attendant Do Not Disturb (H/M)M	215-320
22	Message Registration	215-321
23	Controlled Outgoing Call Restriction	215-322
24	Room Status	215-323
25	Automatic Wake-Up (Alarm Call)	215-324
26	MESSAGE WAITING H/M	215-325
27	Console Date Display and Date Utility	215-326
28	Customer Program Dump Load	215-327
29	Controlling the Printer	215-328
30	Room Audit	215-329
31	System Identifier	215-330
32	Common Use Speed Call	215-331
33	Customer Programming	215-332
34	External Call Forwarding	215-333
35	Test Audible Tone Indicators	215-334
36	Single Digit Dialing	215-335
37	Common Alerting Devices	215-336
38	Answer DID Trunk Call	215-337

ANSWER INCOMING CALL
MAP215-300
Issue 2, February 1982
Sheet 1 of 4

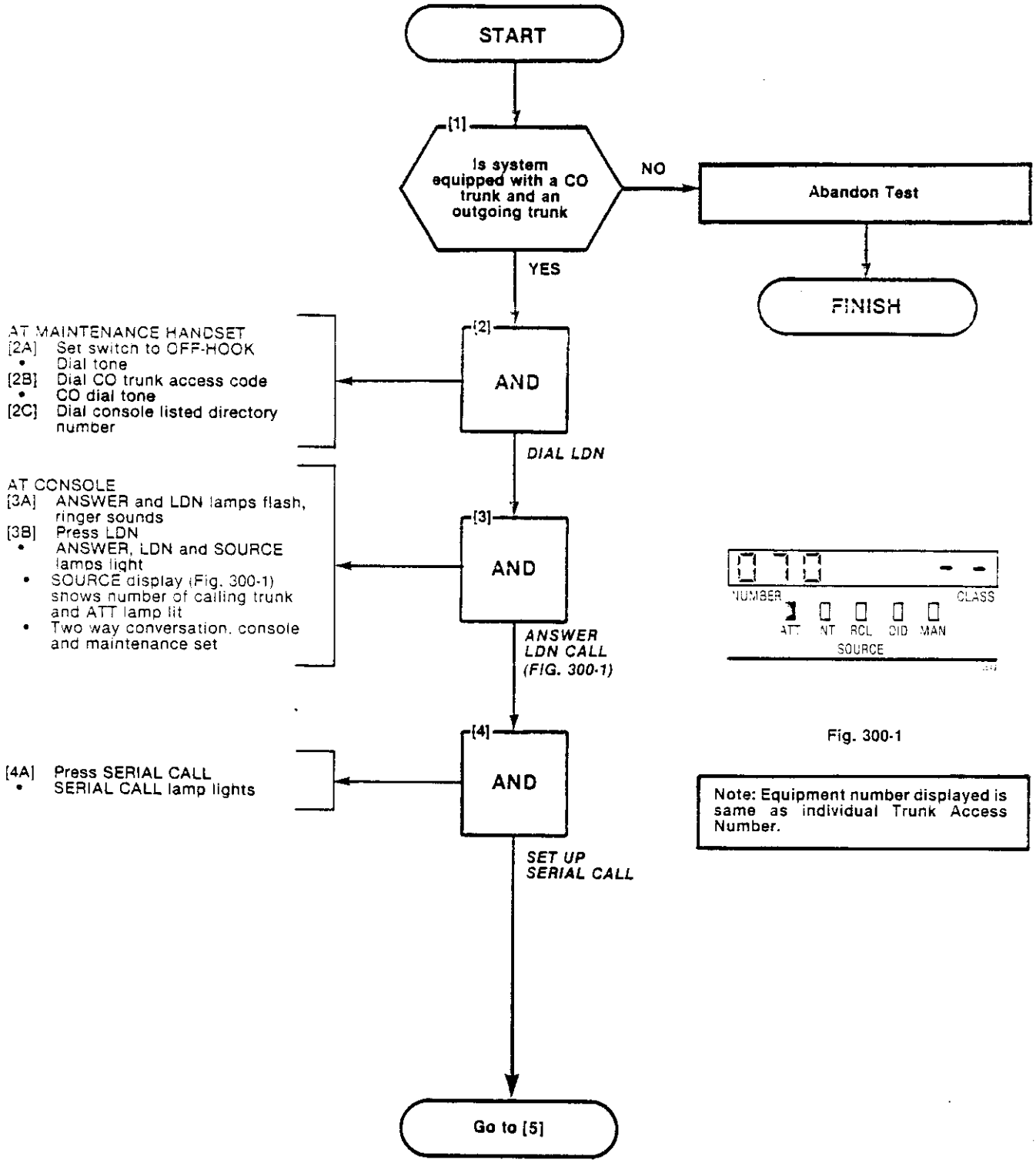

Fig. 300-1

Note: Equipment number displayed is same as individual Trunk Access Number.

ANSWER INCOMING CALL
MAP215-300
Issue 2. February 1982
Sheet 2 of 4

From [4]

AT CONSOLE
[5A] Dial number of check extension
- ANSWER, LDN and DESTINATION lamps lit
- SOURCE display (Fig. 300-2) shows the equipment number of the calling trunk
- DESTINATION display shows the number and COS of the check extension
- ATT and RING lamps lit

[5] AND

EXTEND CALL TO TEST STATION (FIG. 300-2)

AT CHECK EXTENSION
[6A] Lift check extension handset
- Two way conversation with console

[6] AND

ANSWER CALL

AT CONSOLE
[7A] Press SOURCE
- ANSWER, LDN and SOURCE lamps lit
- SOURCE display (Fig. 300-3) shows the number of the calling trunk. ATT lamp lit
- DESTINATION display shows number and COS of check extension
- Two way private call with maintenance set

[7] AND

SPLIT CALL TO SOURCE (FIG. 300-3)

Go to [8]

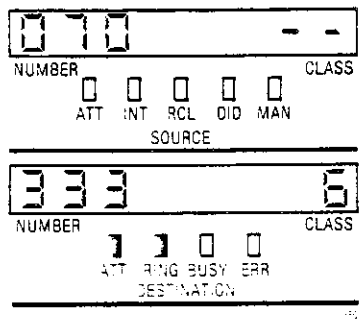

Fig. 300-2

Note: Equipment number displayed is same as individual Trunk Access Number.

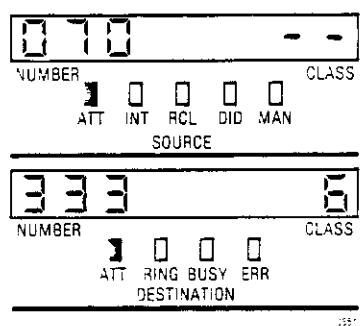

Fig. 300-3

Note: Equipment number displayed is same as individual Trunk Access Number.

ANSWER INCOMING CALL
MAP215-300
Issue 2, February 1982
Sheet 3 of 4

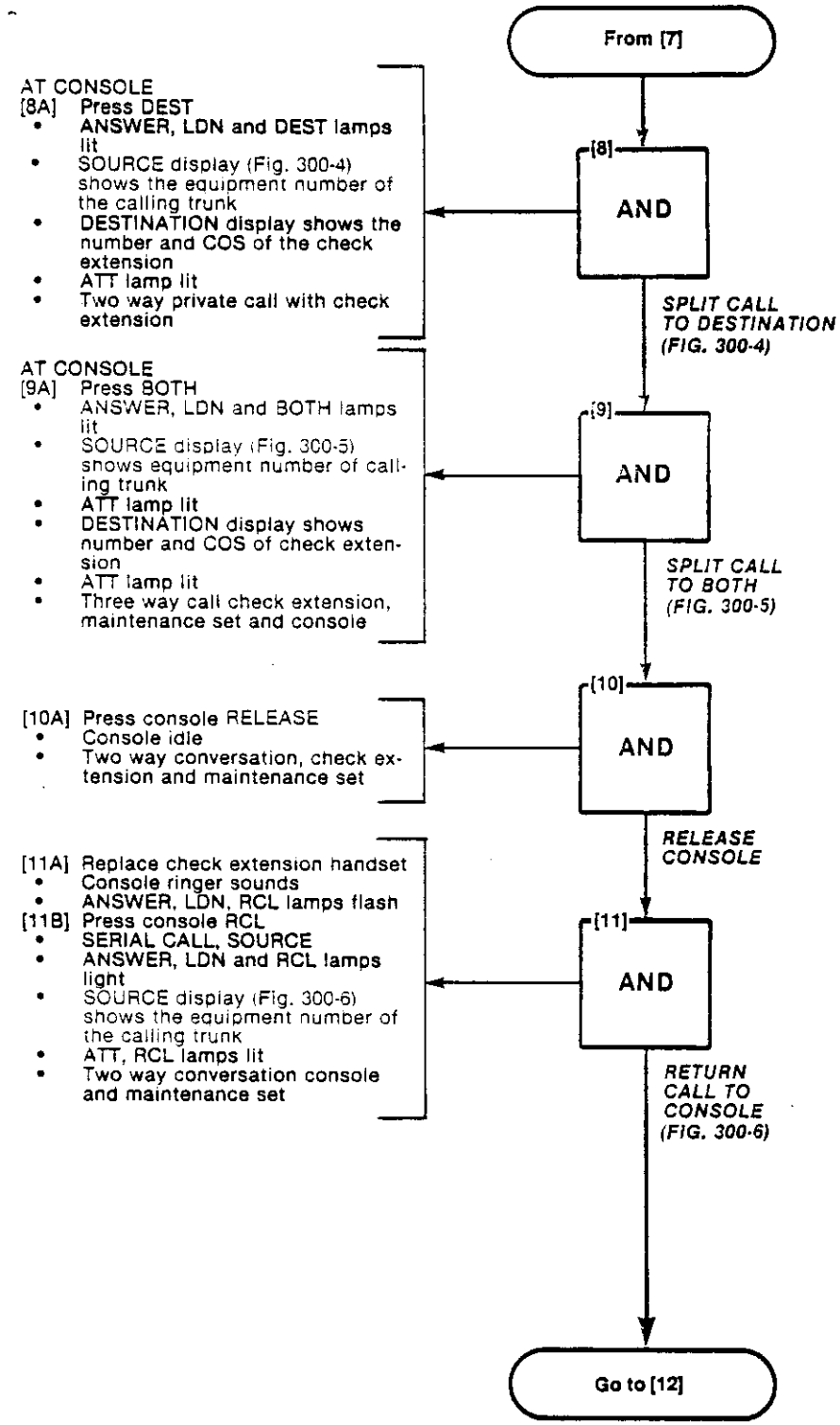

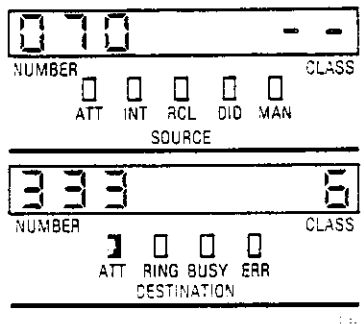

Fig. 300-4

Note: Equipment number displayed is same as individual Trunk Access Number.

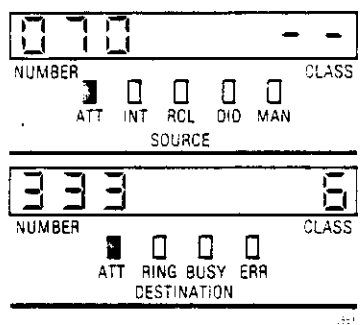

Fig. 300-5

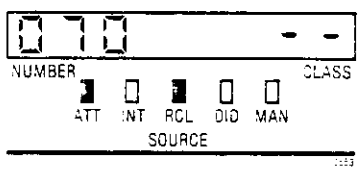

Fig. 300-6

ANSWER INCOMING CALL
MAP215-300
Issue 2, February 1982
Sheet 4 of 4

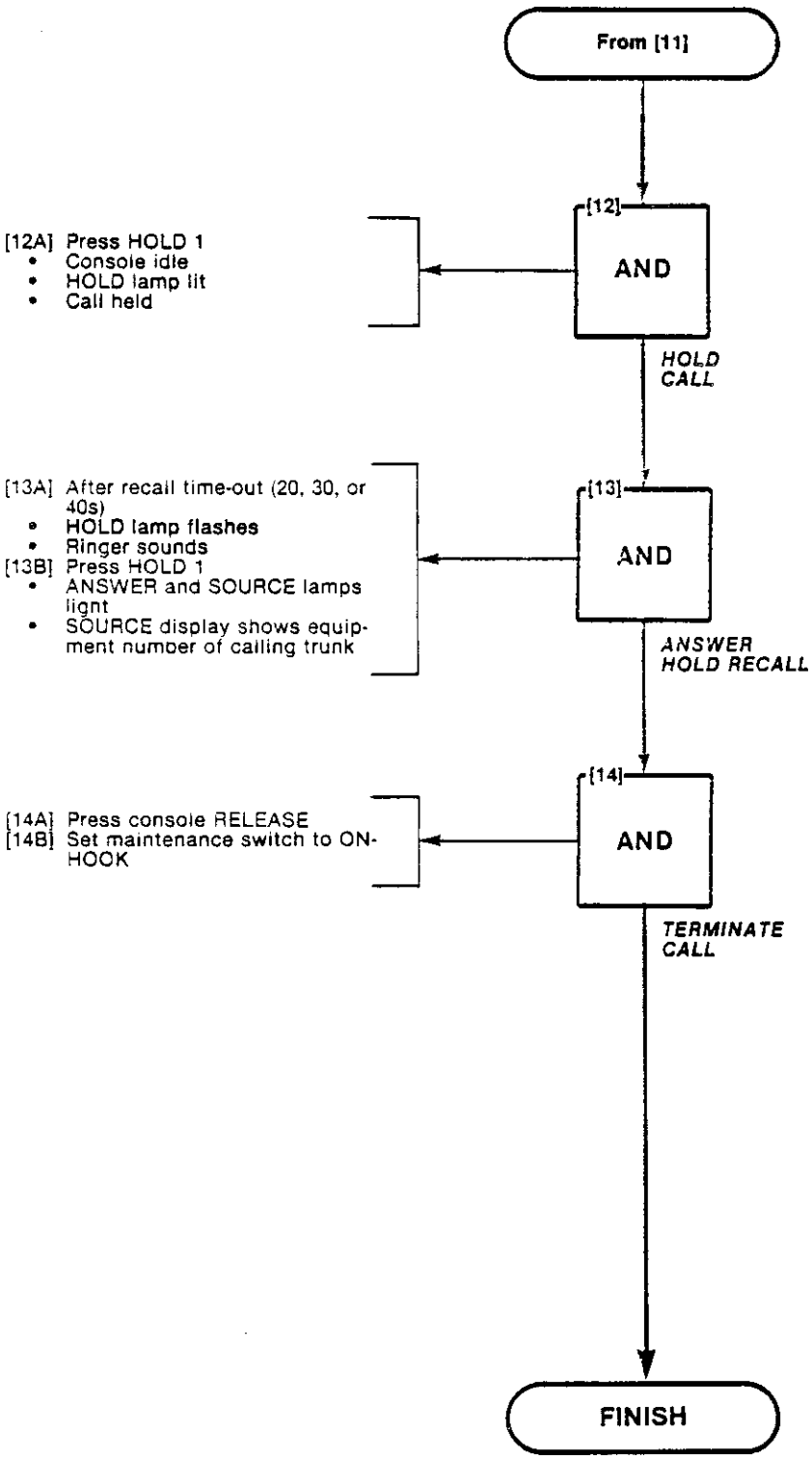

AUTOMATIC CALLBACK
MAP215-301
Issue 1, August 1981
Sheet 1 of 1

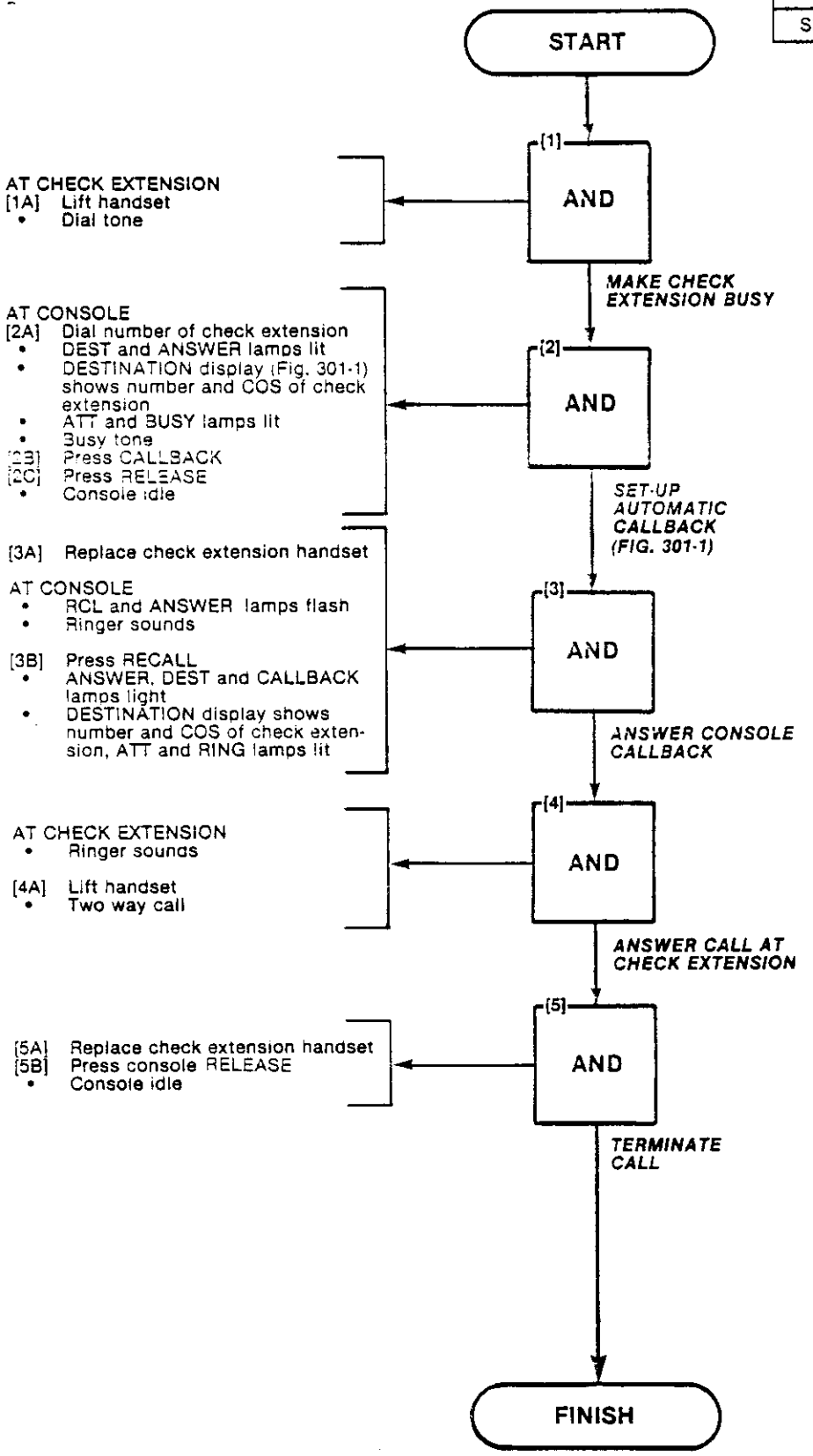

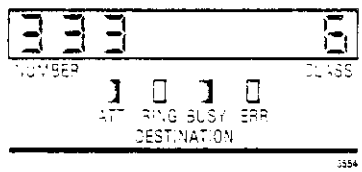

Fig. 301-1

EXTENDING INTERNAL CALLS
MAP215-302
Issue 1, August 1981
Sheet 1 of 1

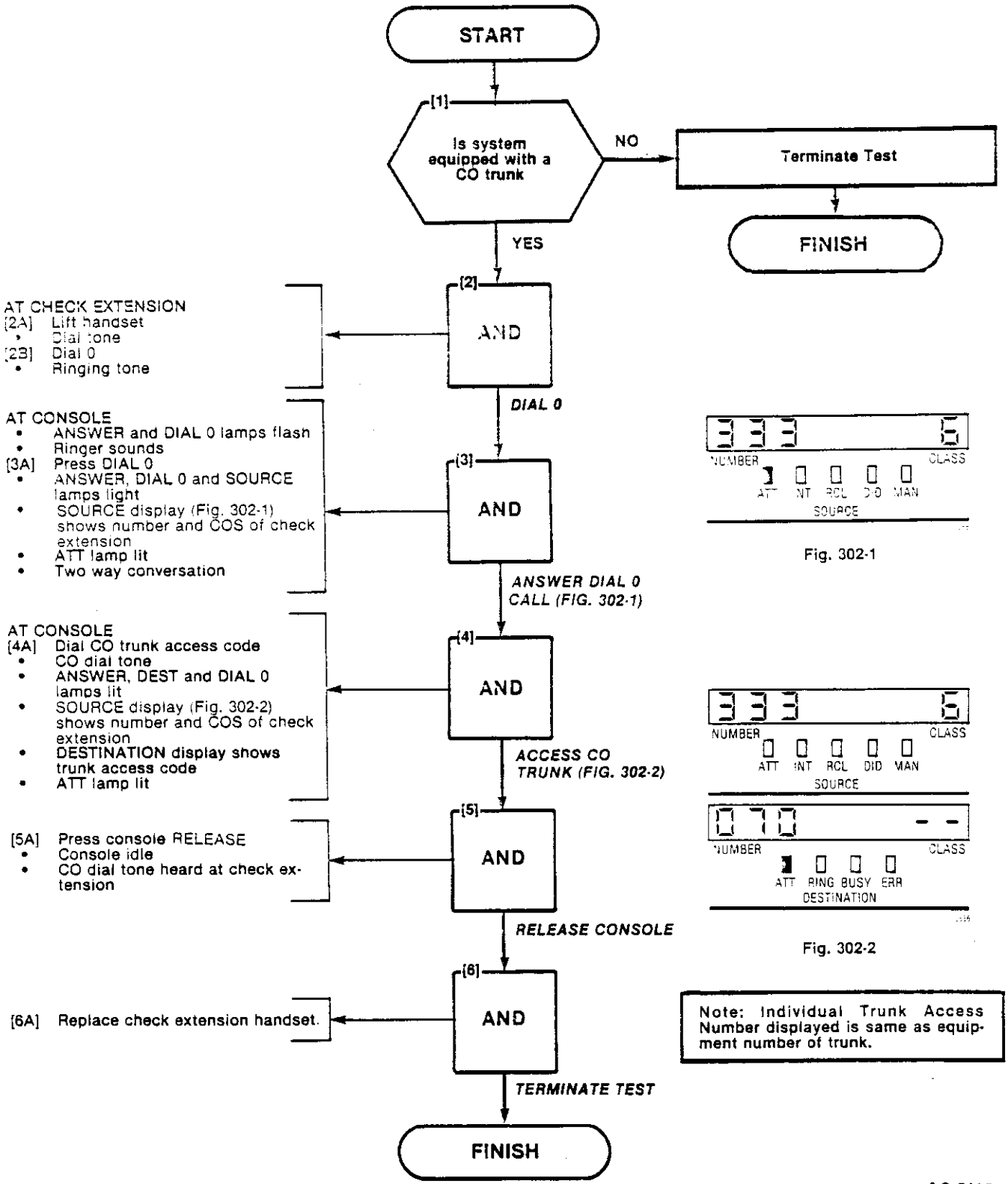

Fig. 302-1

Fig. 302-2

Note: Individual Trunk Access Number displayed is same as equipment number of trunk.

ANSWERING RECALL
MAP215-303
Issue 2, February 1982
Sheet 1 of 2

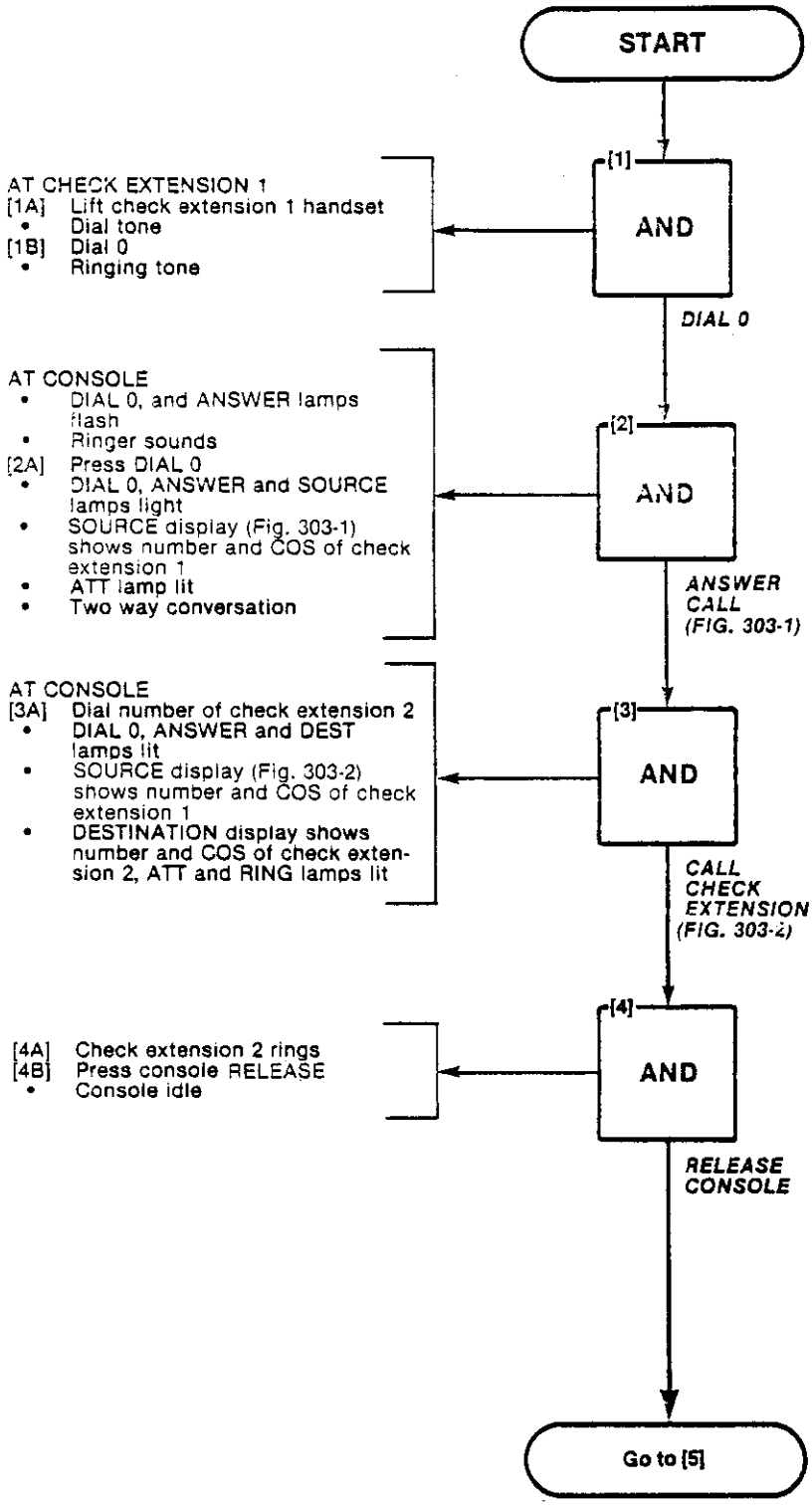

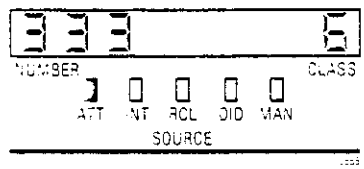

Fig. 303-1

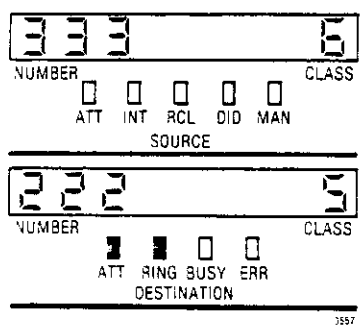

Fig. 303-2

ANSWERING RECALL
MAP215-303
Issue 2, February 1982
Sheet 2 of 2

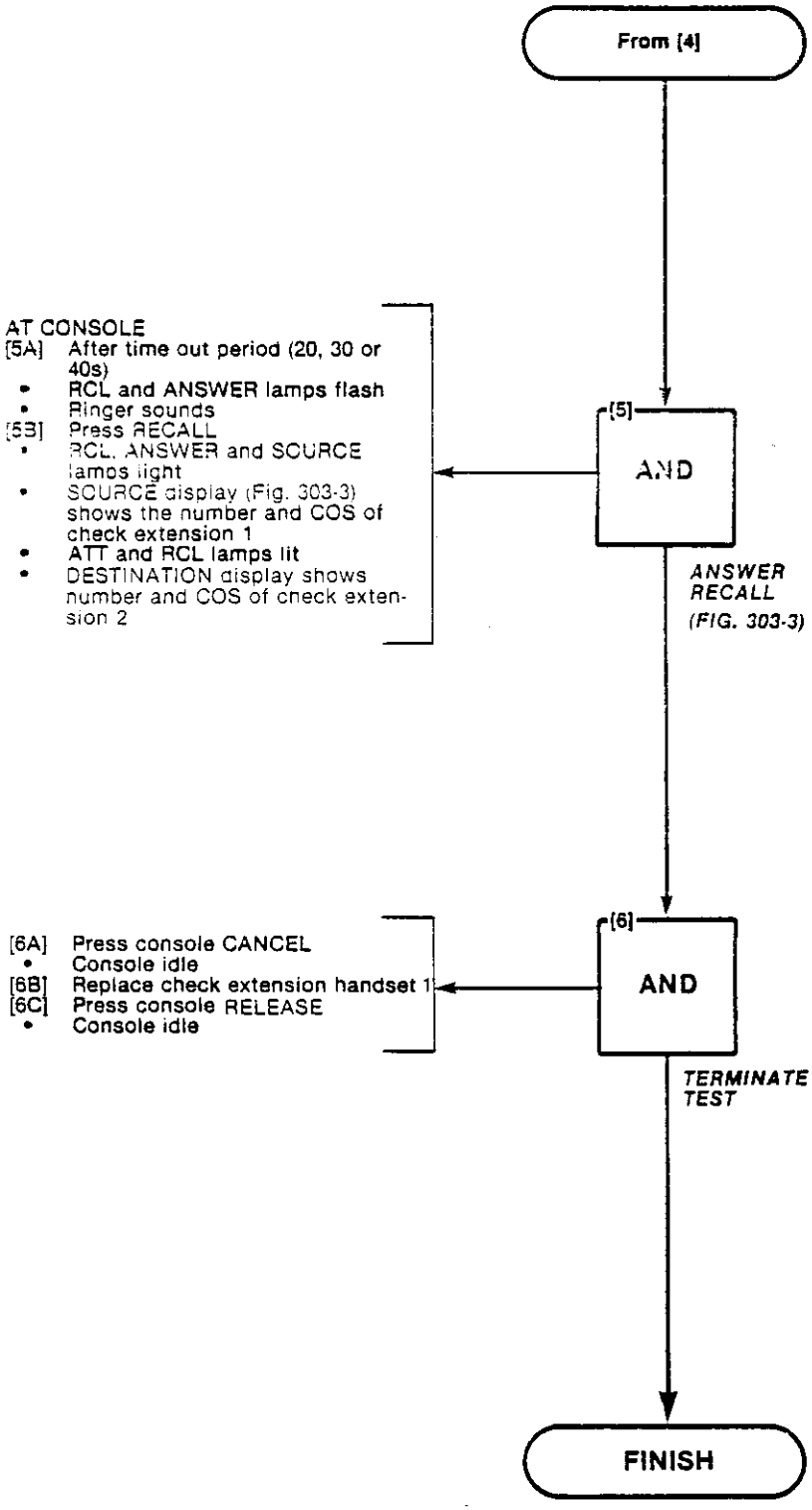

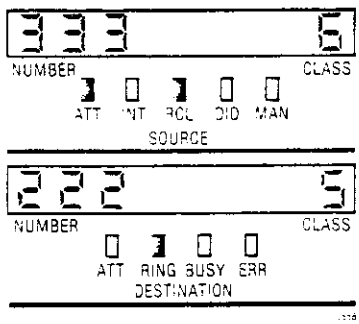

Fig. 303-3

OVERRIDE
MAP215-304
Issue 1, August 1981
Sheet 1 of 1

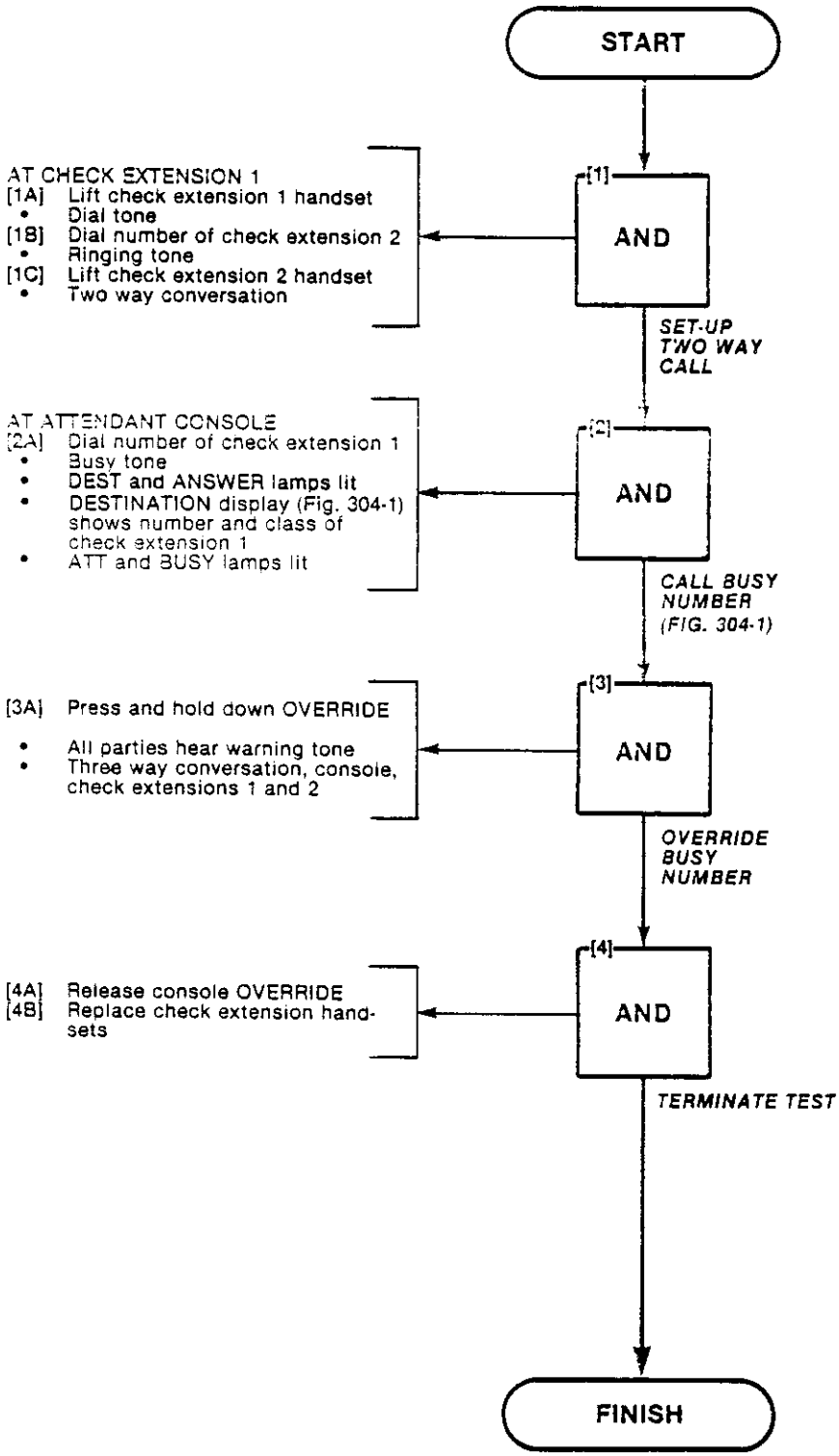

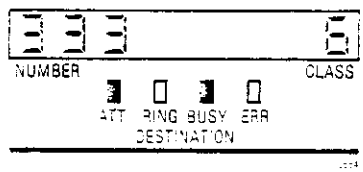

Fig. 304-1

FLEXIBLE NIGHT SERVICE
MAP215-305
Issue 2, February 1982
Sheet 1 of 1

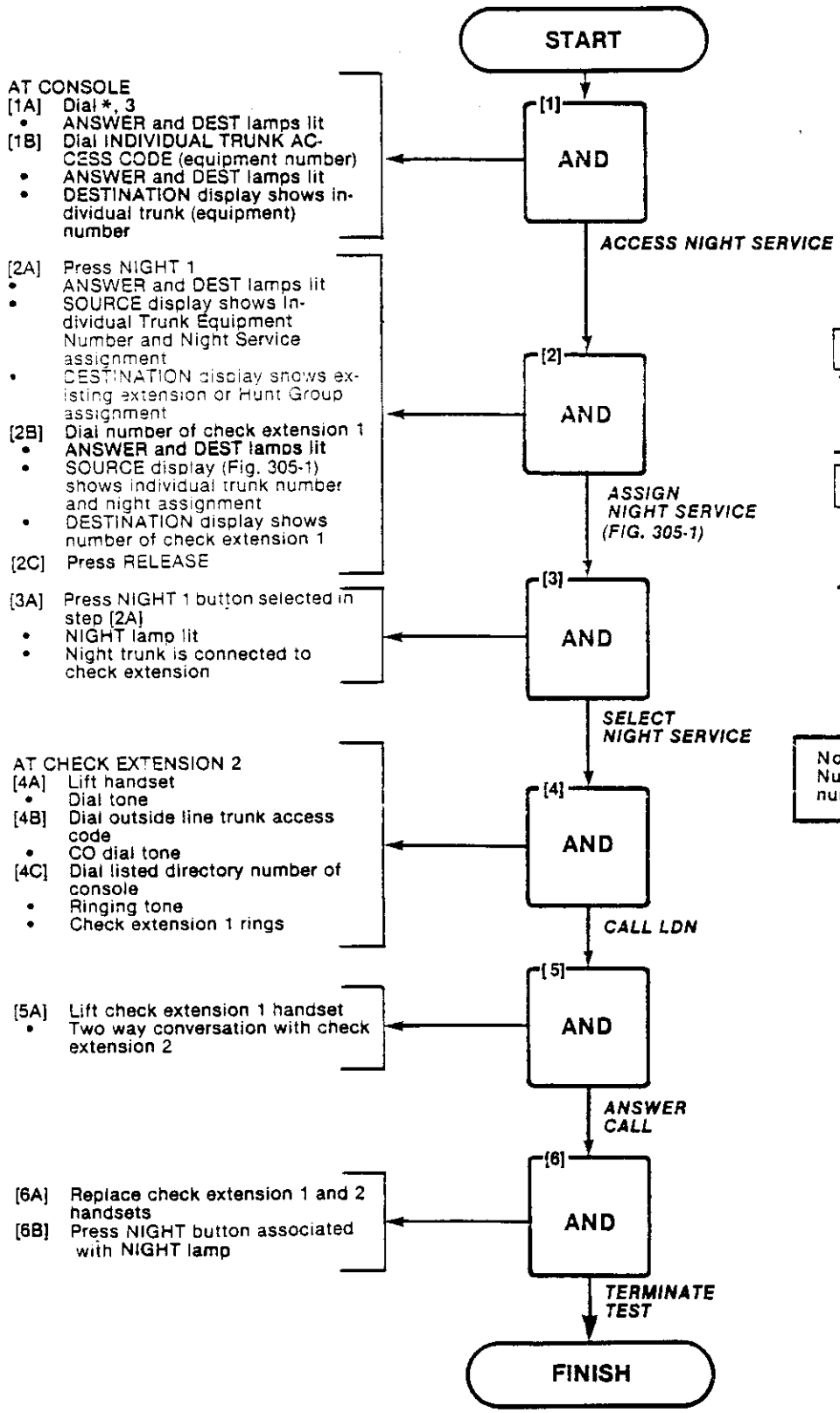

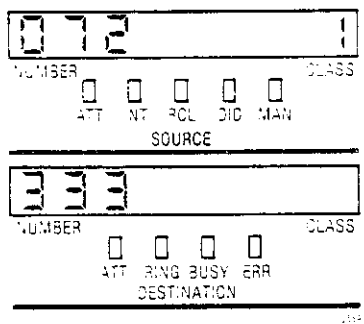

Fig. 305-1

Note: Individual Trunk Access Number displayed is the equipment number of the trunk.

TRUNK BUSY OPERATION
MAP215-306
Issue 2, February 1982
Sheet 1 of 1

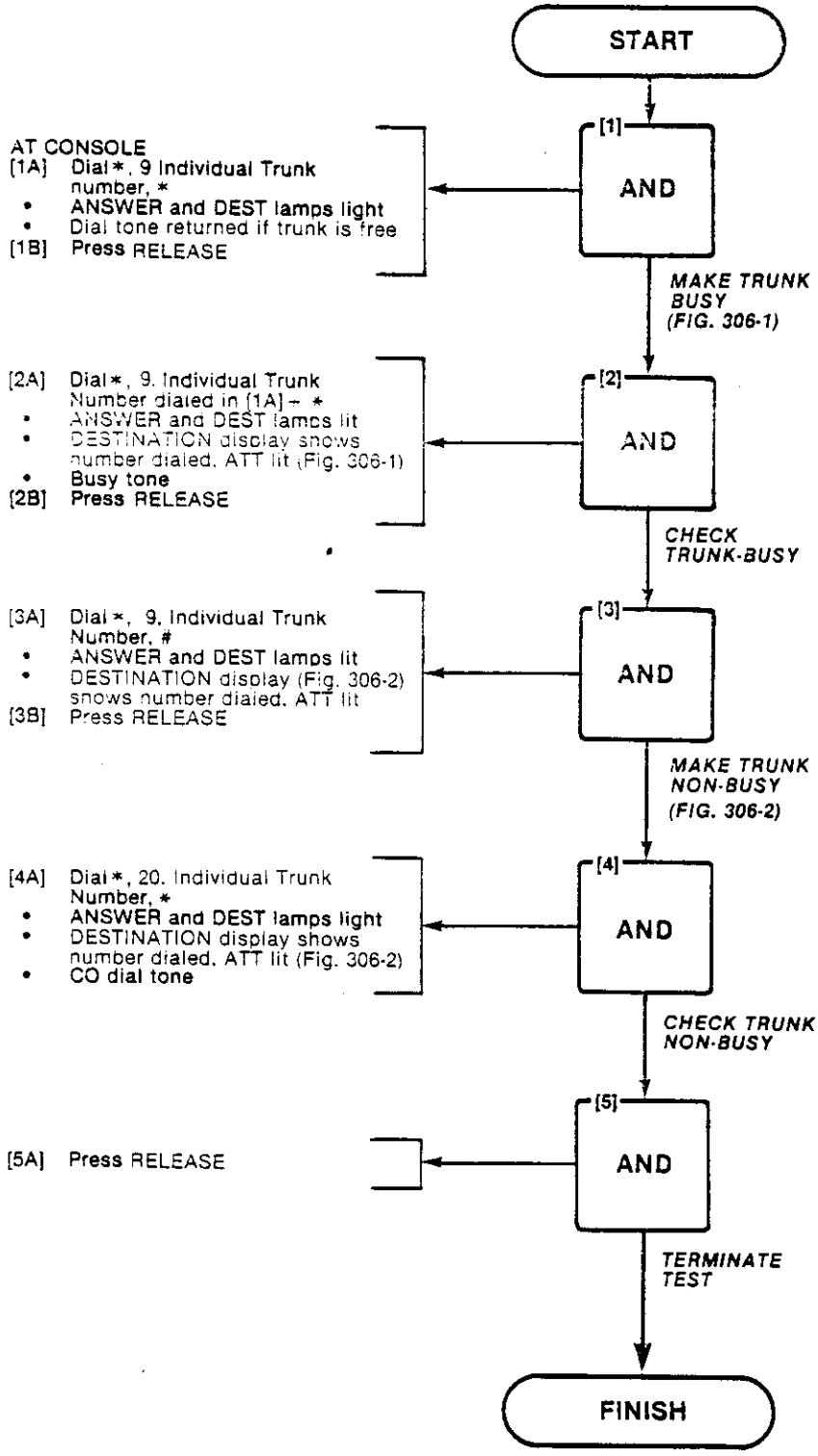

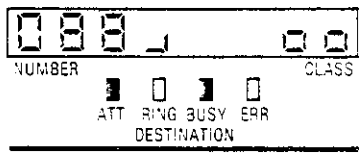

Fig. 306-1

Note: Individual Trunk Access Number displayed is same as equipment number of trunk.

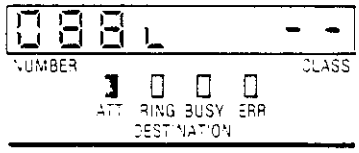

Fig. 306-2

TRUNK GROUP ATTENDANT ACCESS
MAP215-307
Issue 2, February 1982
Sheet 1 of 1

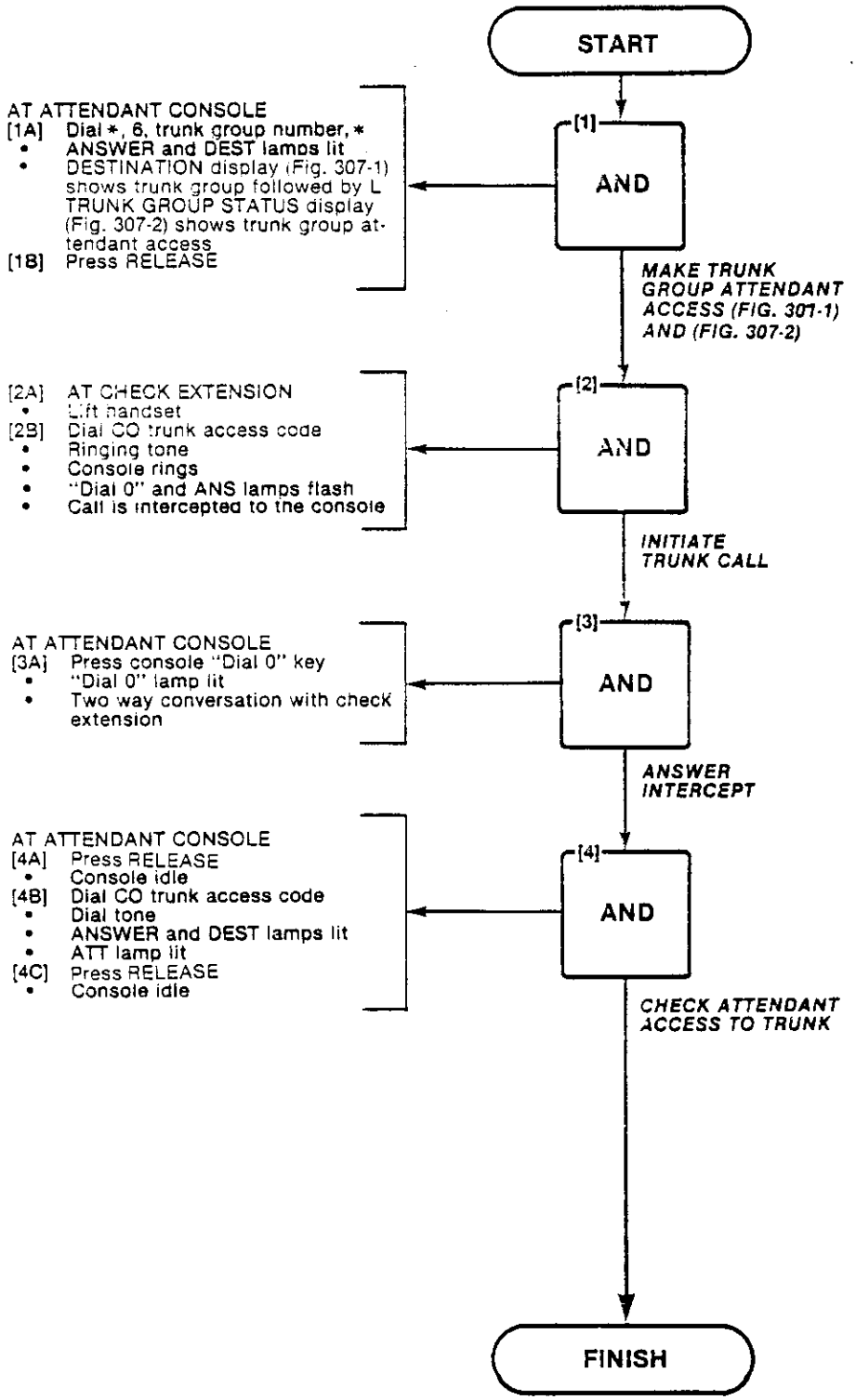

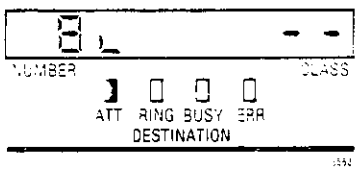

Fig. 307-1

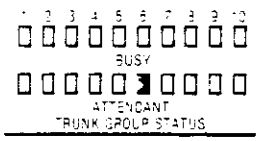

Fig. 307-2

TRUNK GROUP DIAL ACCESS
MAP215-308
Issue 2, February 1982
Sheet 1 of 1

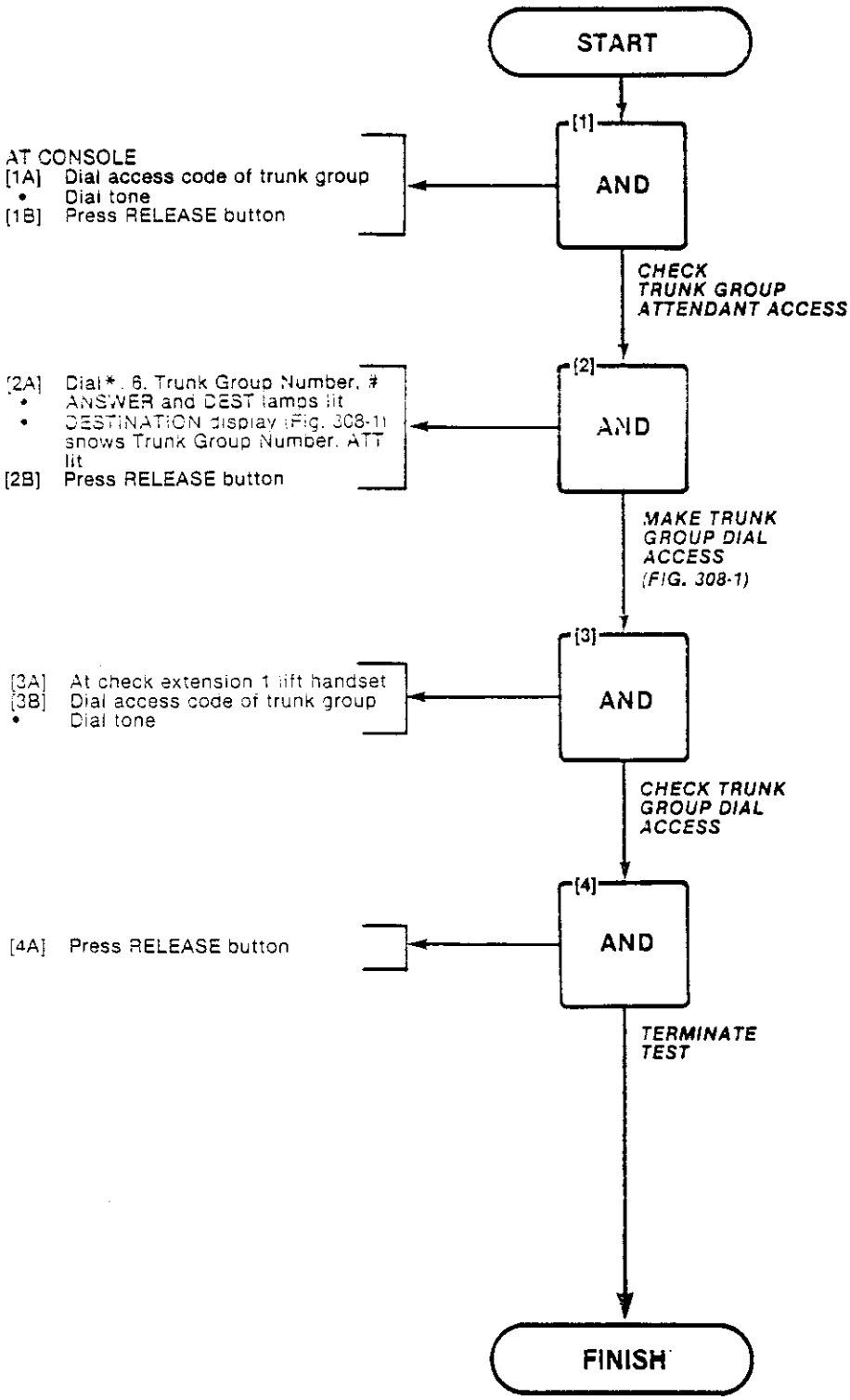

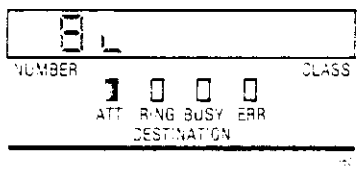

Fig. 308-1

TEST TERMINATION
MAP215-309
Issue 2, February 1982
Sheet 1 of 5

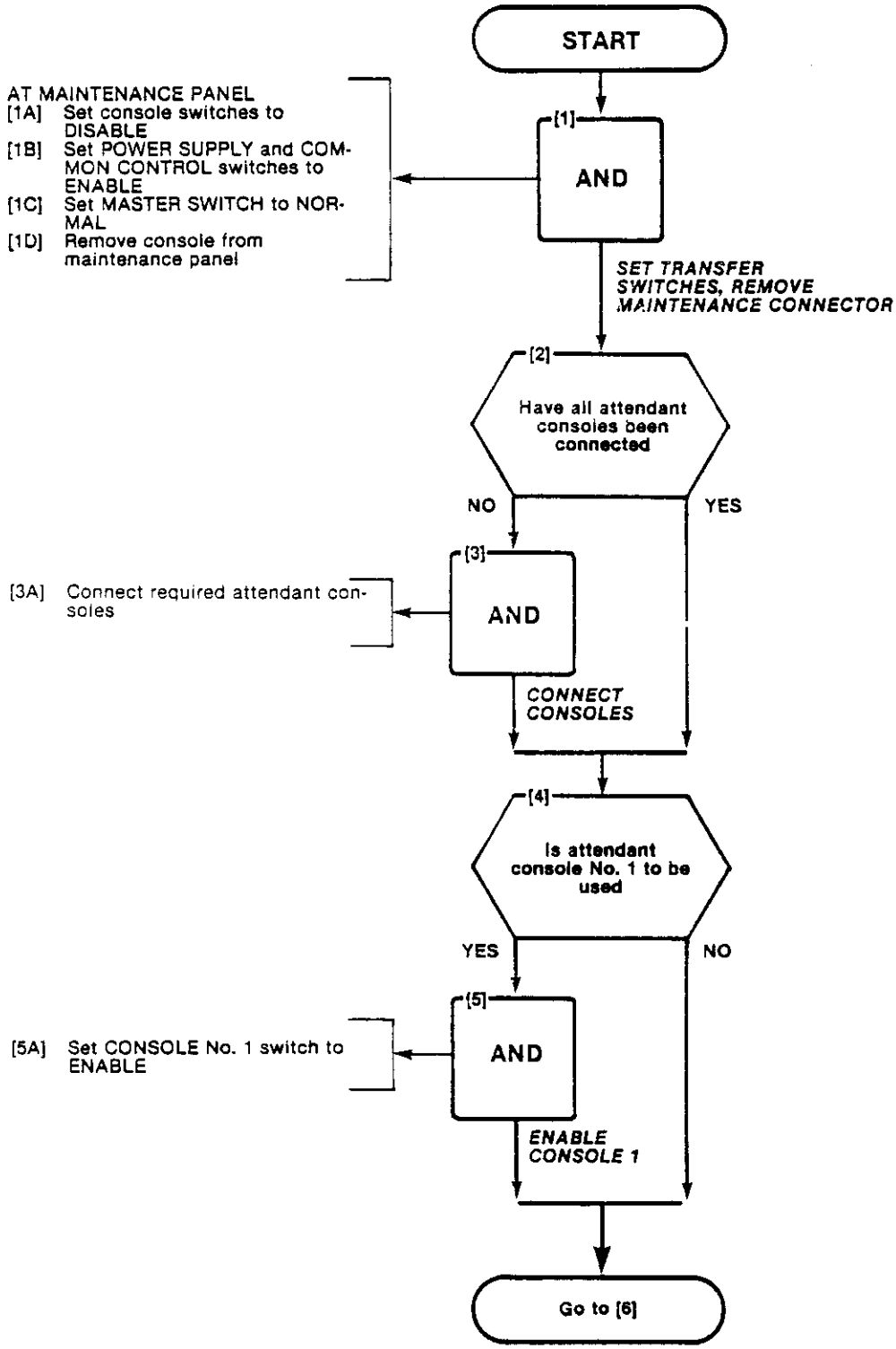

TEST TERMINATION
MAP215-309
Issue 2, February 1982
Sheet 2 of 5

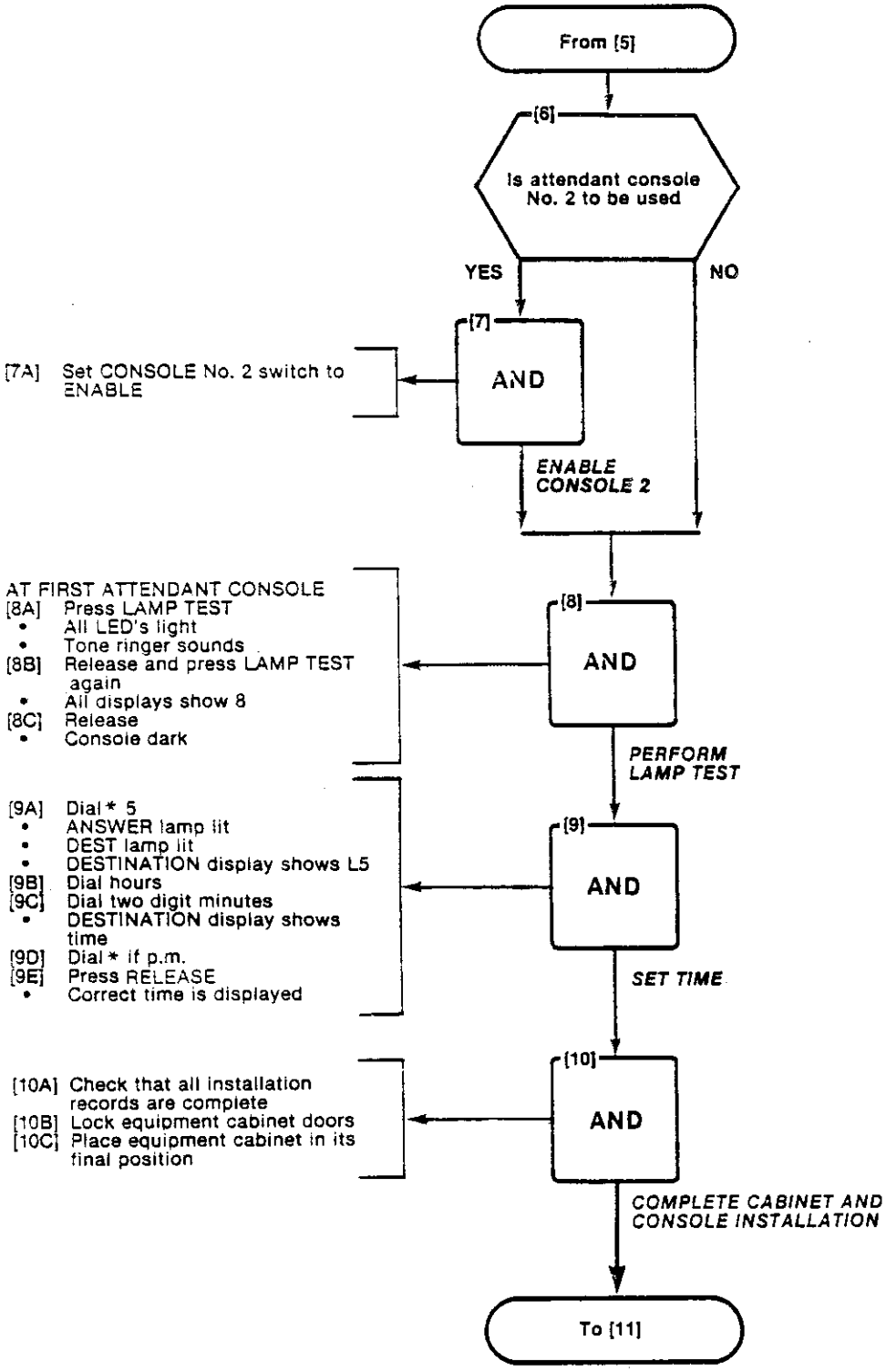

TEST TERMINATION
MAP215-309
Issue 2, February 1982
Sheet 3 of 5

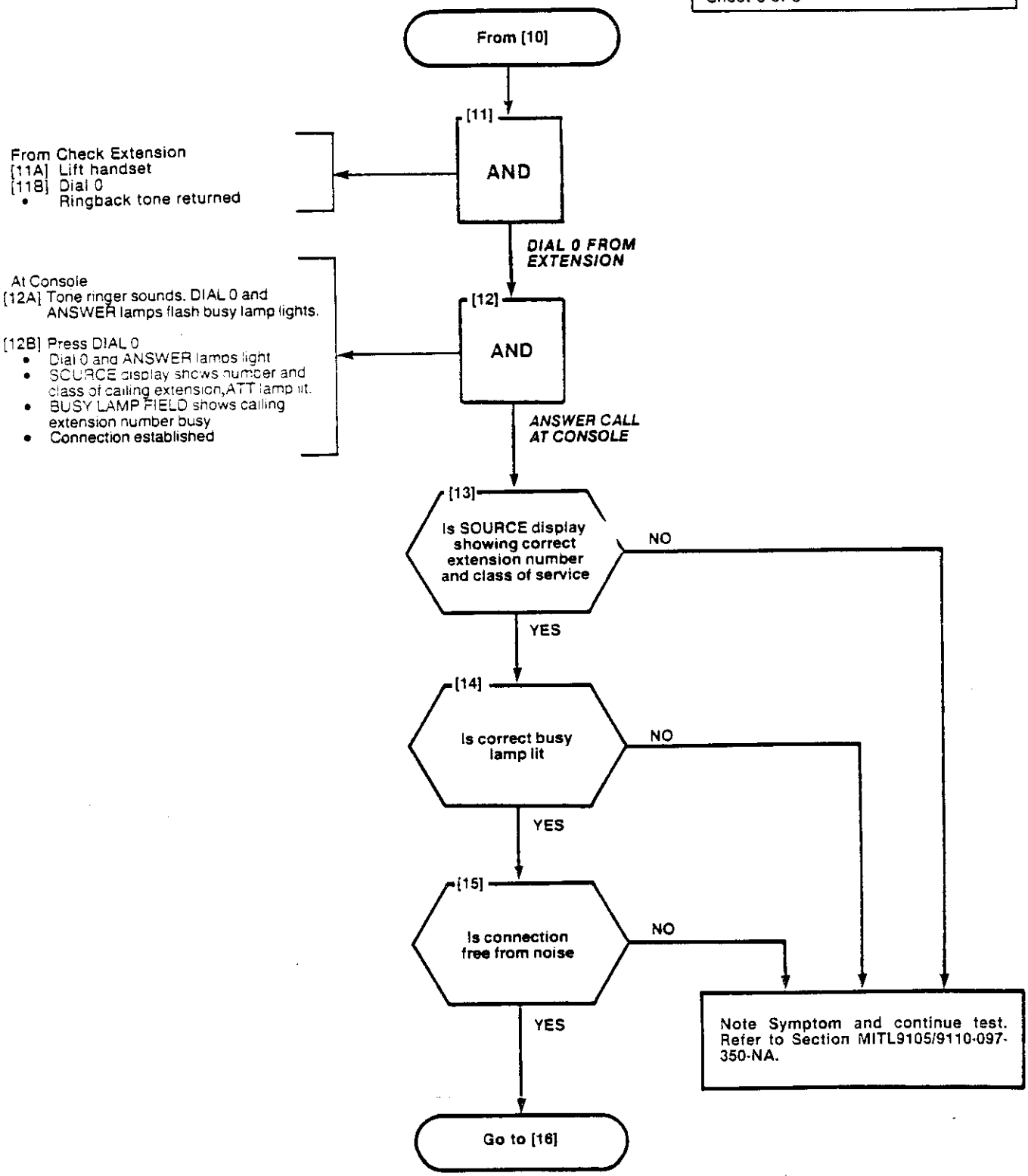

TEST TERMINATION
MAP215-309
Issue 2. February 1982
Sheet 4 of 5

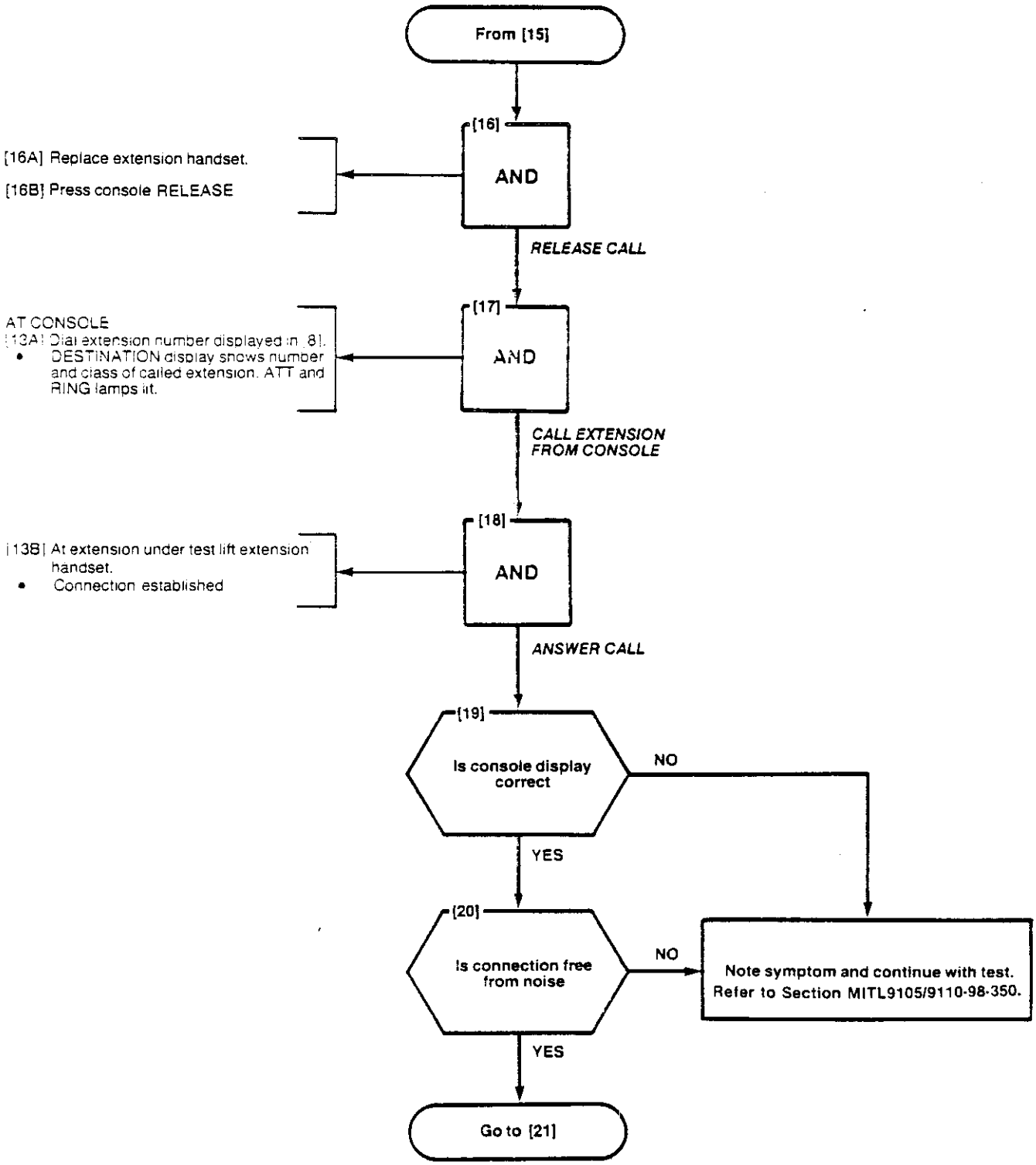

TEST TERMINATION
MAP215-309
Issue 2, February 1982
Sheet 5 of 5

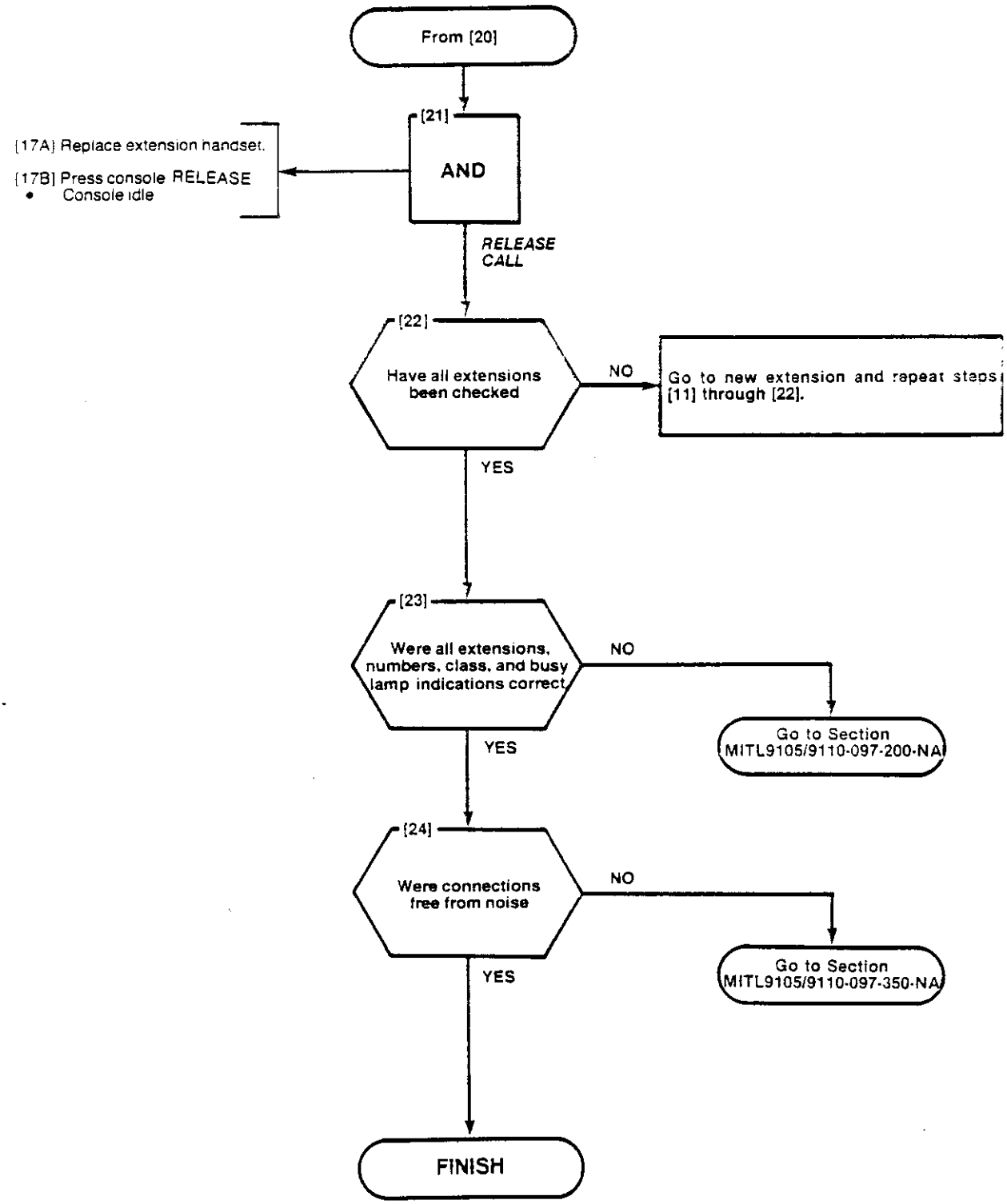

ANSWER INCOMING CO TRUNK CALL
MAP215-310
Issue 2, February 1982
Sheet 1 of 4

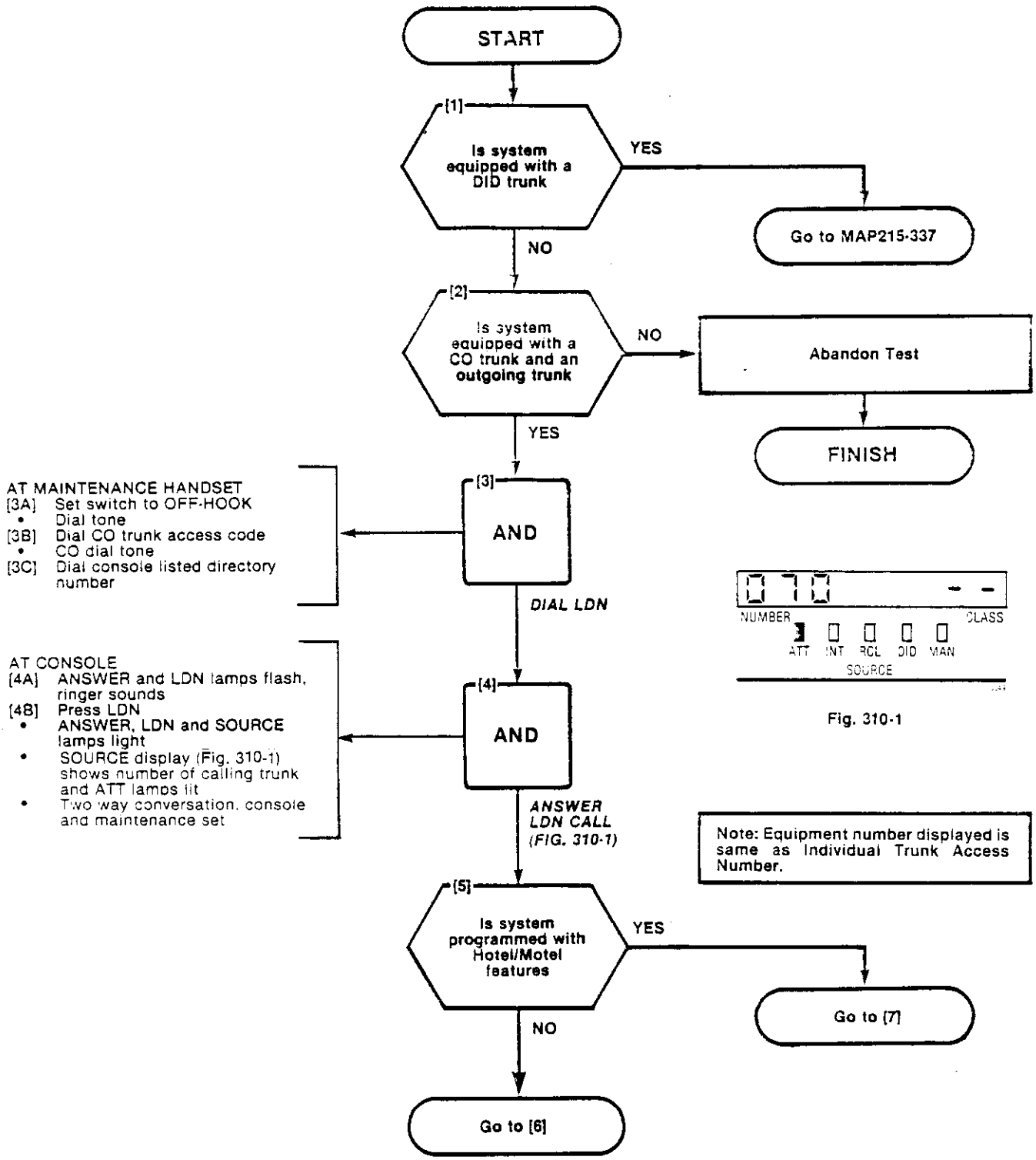

Fig. 310-1

ANSWER INCOMING CO TRUNK CALL
MAP215-310
Issue 2, February 1982
Sheet 2 of 4

From [5]

[6] AND

[6A] Press SERIAL
- SERIAL lamp lights

SET UP SERIAL CALL

[7] AND

AT CONSOLE
[7A] Dial number of check extension
- ANSWER, LDN, and DESTINATION lamps lit
- SOURCE display (Fig. 310-2) shows the equipment number of the calling trunk
- DESTINATION display shows the number and COS of the check extension
- ATT and RING lamps lit

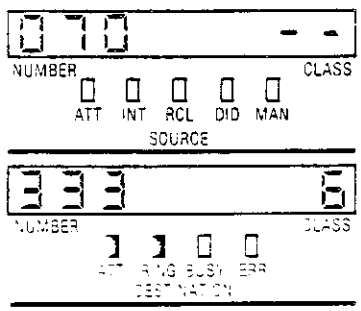

Fig. 310-2

EXTEND CALL TO TEST STATION (FIG. 310-2)

[8] AND

AT CHECK EXTENSION
[8A] Lift check extension handset
- Two way conversation with console

Note: Equipment number displayed is same as Individual Trunk Access Number.

ANSWER CALL

[9] AND

AT CONSOLE
[9A] Press SOURCE
- ANSWER, LDN and SOURCE lamps lit
- SOURCE display (Fig. 310-3) shows the number of the calling trunk ATT lamp lit
- DESTINATION display shows number and COS of check extension
- Two way private call with maintenance set

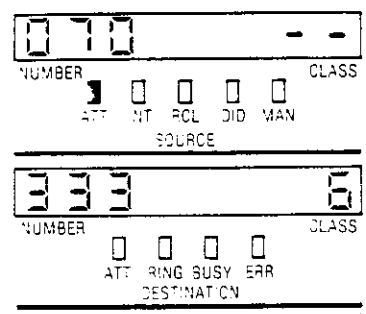

Fig. 310-3

SPLIT CALL TO SOURCE (FIG. 310-3)

Go to [10]

Note: Equipment number displayed is same as Individual Trunk Access Number.

ANSWER INCOMING CO TRUNK CALL
MAP215-310
Issue 2, February 1982
Sheet 3 of 4

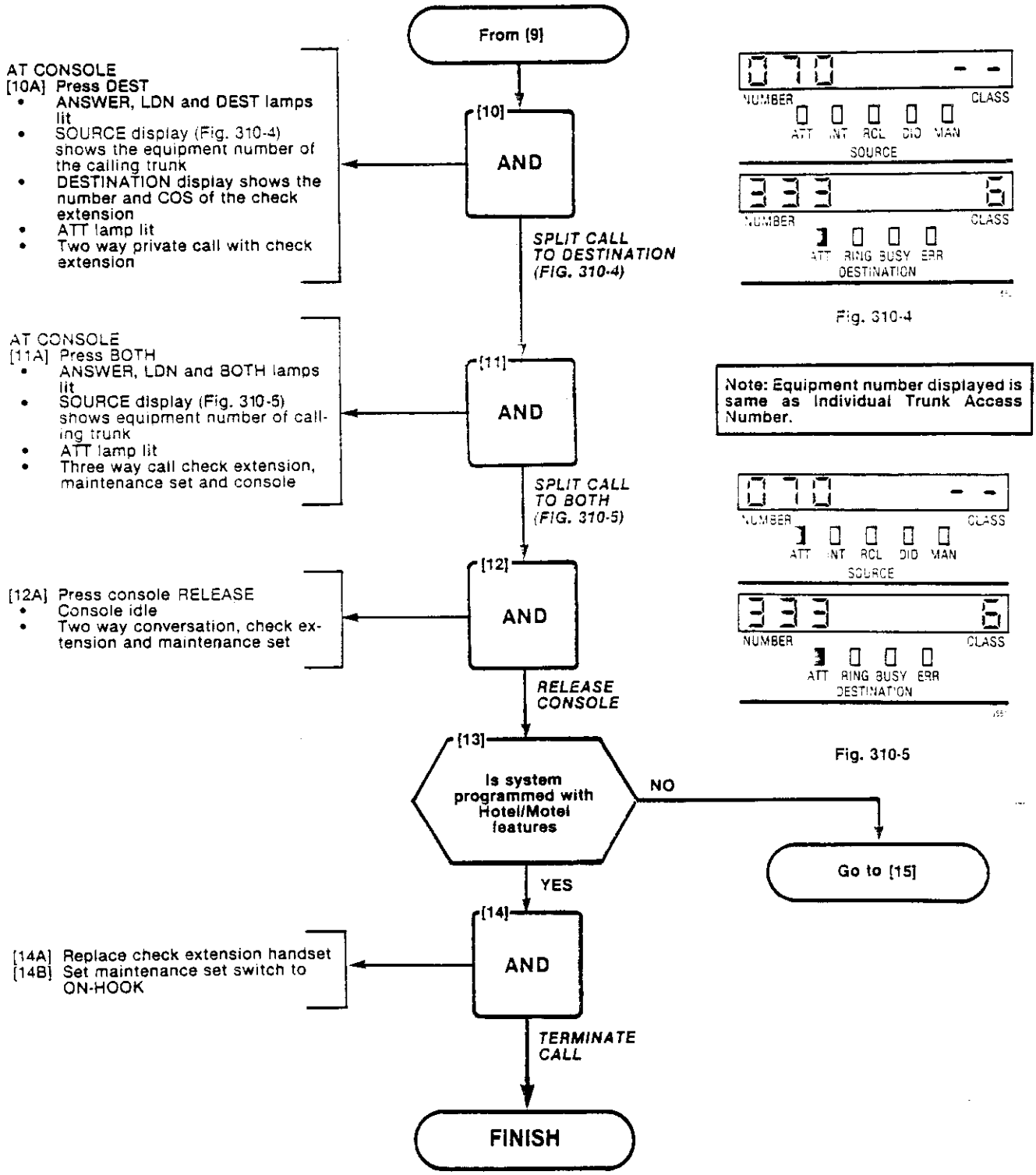

Fig. 310-4

Note: Equipment number displayed is same as Individual Trunk Access Number.

Fig. 310-5

ANSWER INCOMING CO TRUNK CALL
MAP215-310
Issue 2, February 1982
Sheet 4 of 4

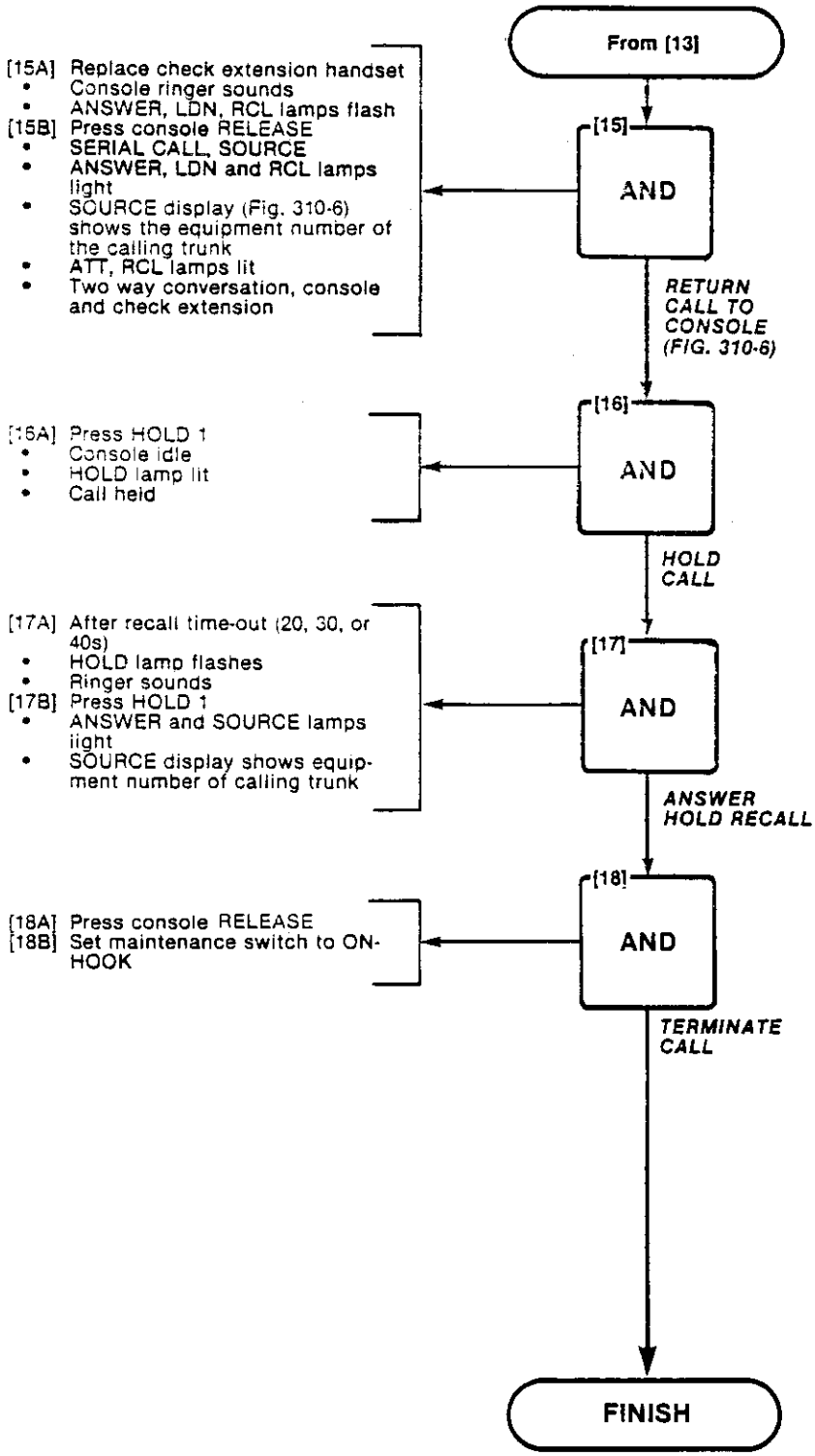

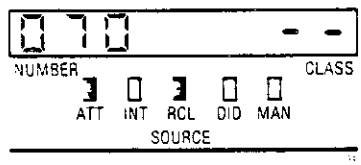

Fig. 310-6

ATTENDANT DO NOT DISTURB
MAP215-311
Issue 2, February 1982
Sheet 1 of 1

START

[1] AND

AT CONSOLE
[1A] Press GUEST ROOM button and dial check extension 1 number
[1B] Press Do Not Disturb
- Do Not Disturb lamp lit

[1C] Press RELEASE

ENABLE FEATURE FROM CONSOLE

[2] AND

AT CONSOLE
- Check extension 1 lamp in Busy Lamp Field lit

AT CHECK EXTENSION 2
[2A] Lift handset
- Dial tone

[2B] Dial number of Check Extension 1
- Ringing tone (NOTE 1)
- Console rings

AT CONSOLE
- ANSWER and DIAL 0 lamps flash

[2C] Press ANSWER
- SOURCE display shows number of Check Extension 2 and class
- ATT and INT lamps lit (Fig. 311-1)

[2D] Two way conversation, Check Extension 2 and console
[2E] Press console RELEASE
[2F] Replace handset at Check Extension 2

VERIFY ENABLED FEATURE

[3] AND

AT CHECK EXTENSION 1
[3A] Lift handset
- Dial tone

[3B] Dial Do Not Disturb access code followed by digit 2
[3C] Replace handset

AT CONSOLE
- Check Extension 1 lamp in Busy Lamp Field goes off

CANCEL DO NOT DISTURB FEATURE

[4] AND

AT CHECK EXTENSION 2
[4A] Lift handset
- Dial tone

[4B] Dial number of Check Extension 1
- Ringing tone

AT CHECK EXTENSION 1
- Bell rings

[4C] Lift handset
- Two way conversation, Check Extension 1 and 2

[4D] Replace Check Extension handsets

AT CONSOLE
[4E] Press DO NOT DSTB key
- Check Extension 1 lamp in Busy Lamp Field is not lit

[4F] Release DO NOT DSTB key
- Console idle

VERIFY CANCELLED FEATURE

FINISH

Note 1: **Ring is given in sub-step [2B] if System Option 174 is selected. Otherwise reorder tone is given and remainder of [2] sub-steps are omitted.**

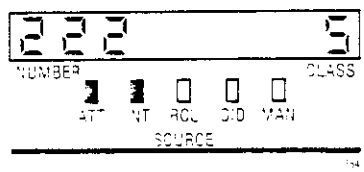

Fig. 311-1

MESSAGE WAITING
MAP215-312
Issue 2, February 1982
Sheet 1 of 2

WARNING: Pressing MSGE WAIT when console is active with an extension may activate or remove the feature at the extension.

START

AT CHECK EXTENSION 1
[1A] Lift handset
- Dial tone

[1B] Dial number of check extension 2
- Ringing tone

AT CHECK EXTENSION 2
- Bell rings

[1C] Lift handset, check extension 2
- Two way conversation, check extensions 1 and 2

[1] AND

ESTABLISH EXTENSION TO EXTENSION CALL

AT CONSOLE
[2A] Dial number of check extension 1
- Busy tone
- DESTINATION display shows number of check extension 1 and class of service
- ATT and BUSY lamps lit

[2B] Press MSGE WAIT
- MSGE WAIT lamp lit

[2C] Press RELEASE
- Console idle

[2] AND

SET MESSAGE WAIT FACILITY FROM CONSOLE

AT CONSOLE
[3A] Press MSGE WAIT
- SOURCE display shows number of extensions with messages waiting, Fig. 312-1

[3B] Release MSGE WAIT
- Console idle

[3] AND

DISPLAY ROOMS WITH MESSAGES WAITING

Go to [4]

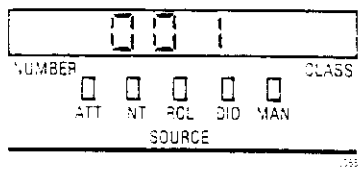

Fig. 312-1

MESSAGE WAITING
MAP215-312
Issue 2, February 1982
Sheet 2 of 2

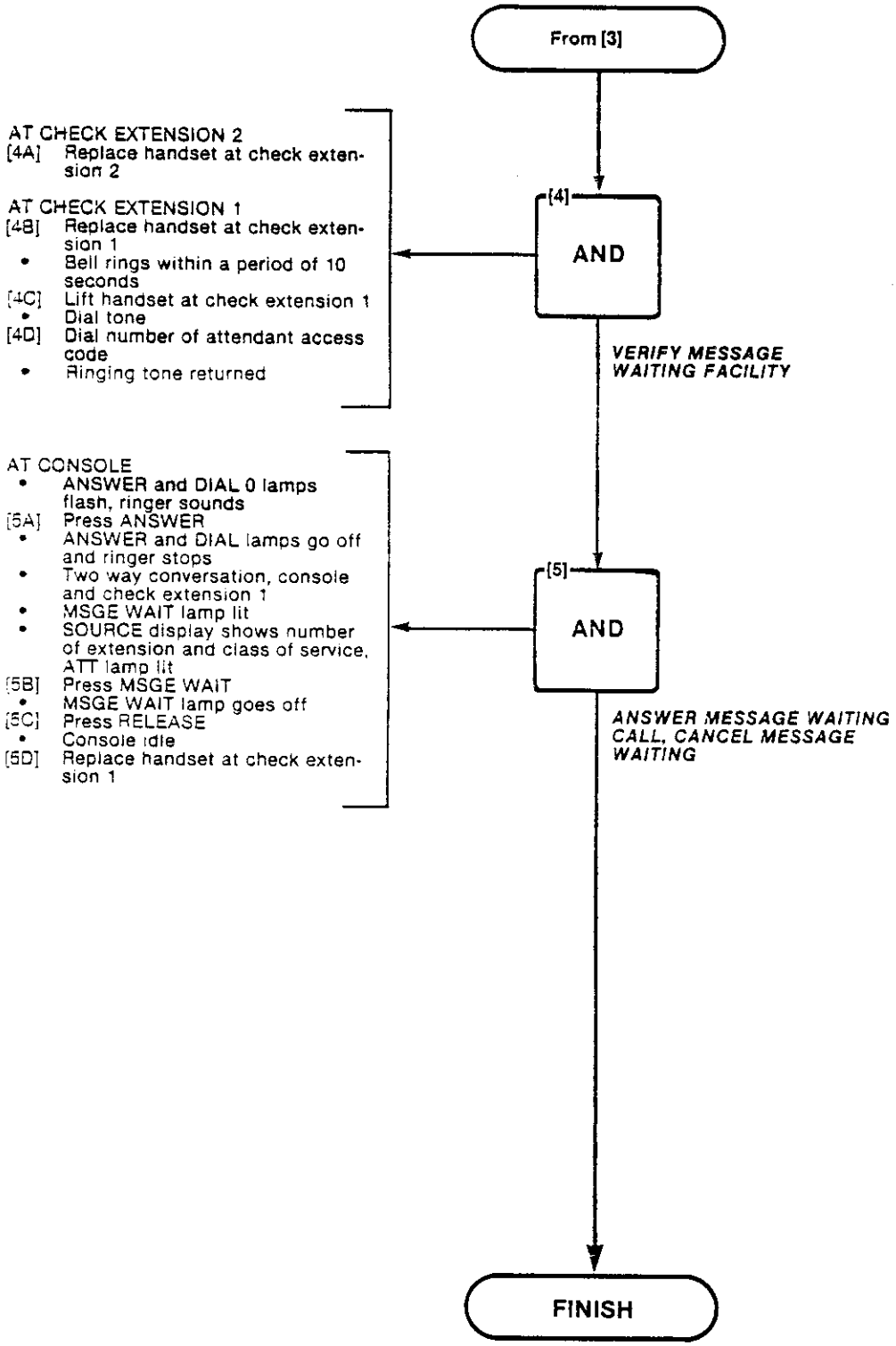

ATTENDANT CALL FORWARDING - BUSY
MAP215-313
Issue 2, February 1982
Sheet 1 of 2

Note
See also MAP215-333 for External Call Forwarding

START

[1] AND

AT CONSOLE
[1A] Dial * 11333
- SOURCE display shows check extension 1 number and "-" (no forward code), Fig. 313-1

[1B] Dial 1222
- SOURCE display shows check extension 1 number and "1" (busy code) (Fig. 313-2)
- DESTINATION display shows check extension 2 number, ATT lamp lit

[1C] Press RELEASE
- Console idle

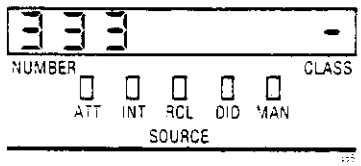

Fig. 313-1

SET UP CALL FORWARDING BUSY (CONSOLE)

[2] AND

AT CHECK EXTENSION 1
[2A] Lift handset.
- Dial tone

AT MAINTENANCE HANDSET
[2B] Set switch to OFF-HOOK
- Dial tone

[2C] Dial number of check extension 1
- Check extension 2 rings

[2D] Replace check extension 1 handset and place maintenance handset switch to ON-HOOK

VERIFY CALL FORWARDING BUSY - NUMBER BUSY

[3] AND

AT MAINTENANCE HANDSET
[3A] Set switch to OFF-HOOK
- Dial tone

[3B] Dial number of check extension 1
- Check extension 1 rings

VERIFY CALL FORWARDING BUSY - NUMBER IDLE

[4] AND

AT CONSOLE
[4A] Dial * 11333
- SOURCE display shows check extension 1 number and "busy" code (1), ATT lamp lit
- DESTINATION shows check extension 2 number (see Fig. 313-2)

[4B] Dial #
[4C] Press RELEASE

AT CHECK EXTENSION 1
[4D] Lift handset
- Dial tone

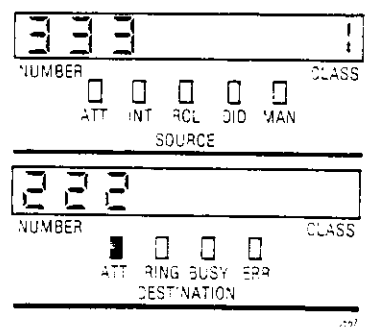

Fig. 313-2

CANCEL CALL FORWARDING BUSY

Go to [5]

ATTENDANT CALL FORWARDING - BUSY
MAP215-313
Issue 2. February 1982
Sheet 2 of 2

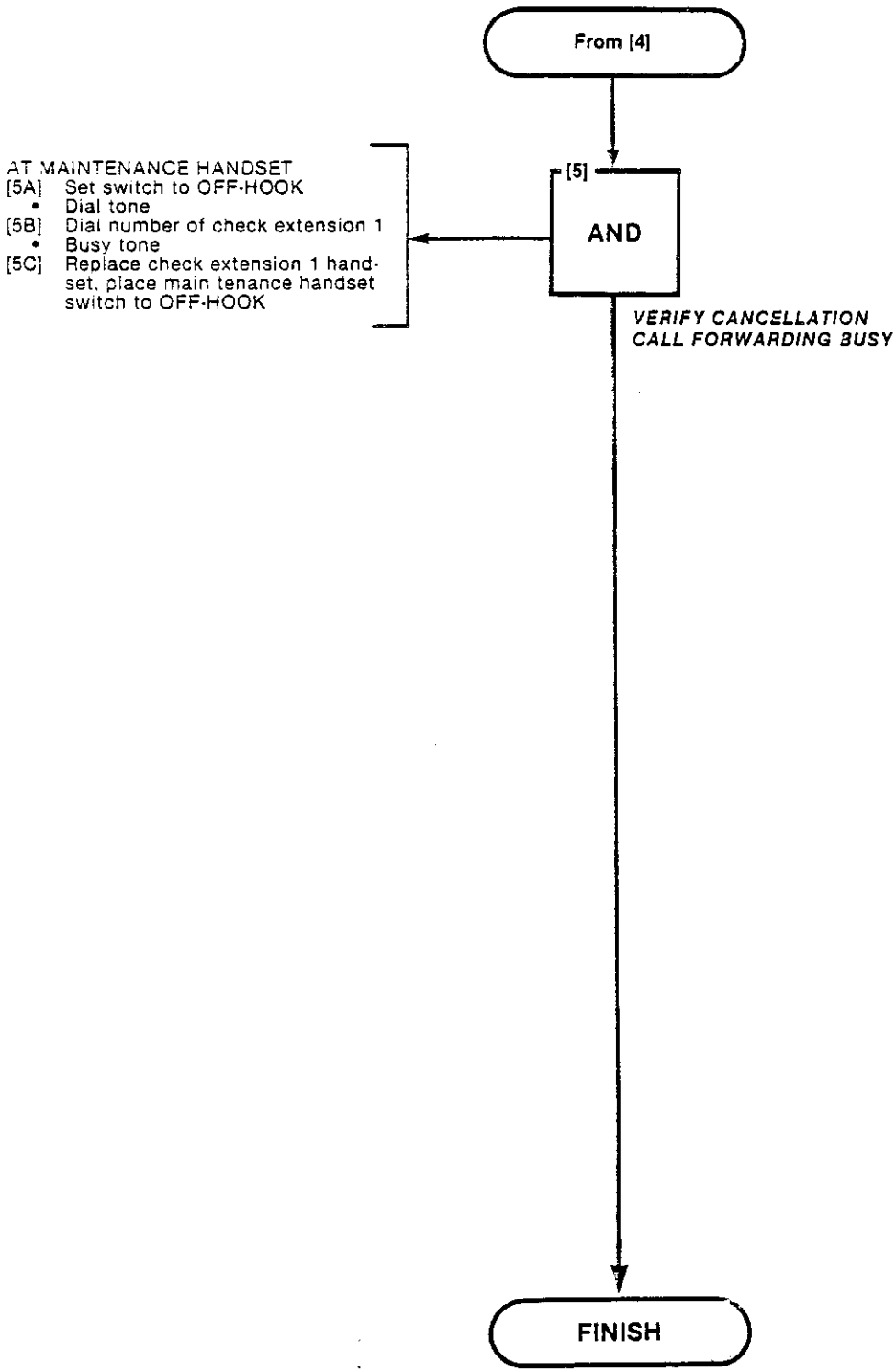

ATTENDANT CALL FORWARDING - DON'T ANSWER
MAP215-314
Issue 2, February 1982
Sheet 1 of 1

Note
See also MAP215-333 for External Call Forwarding

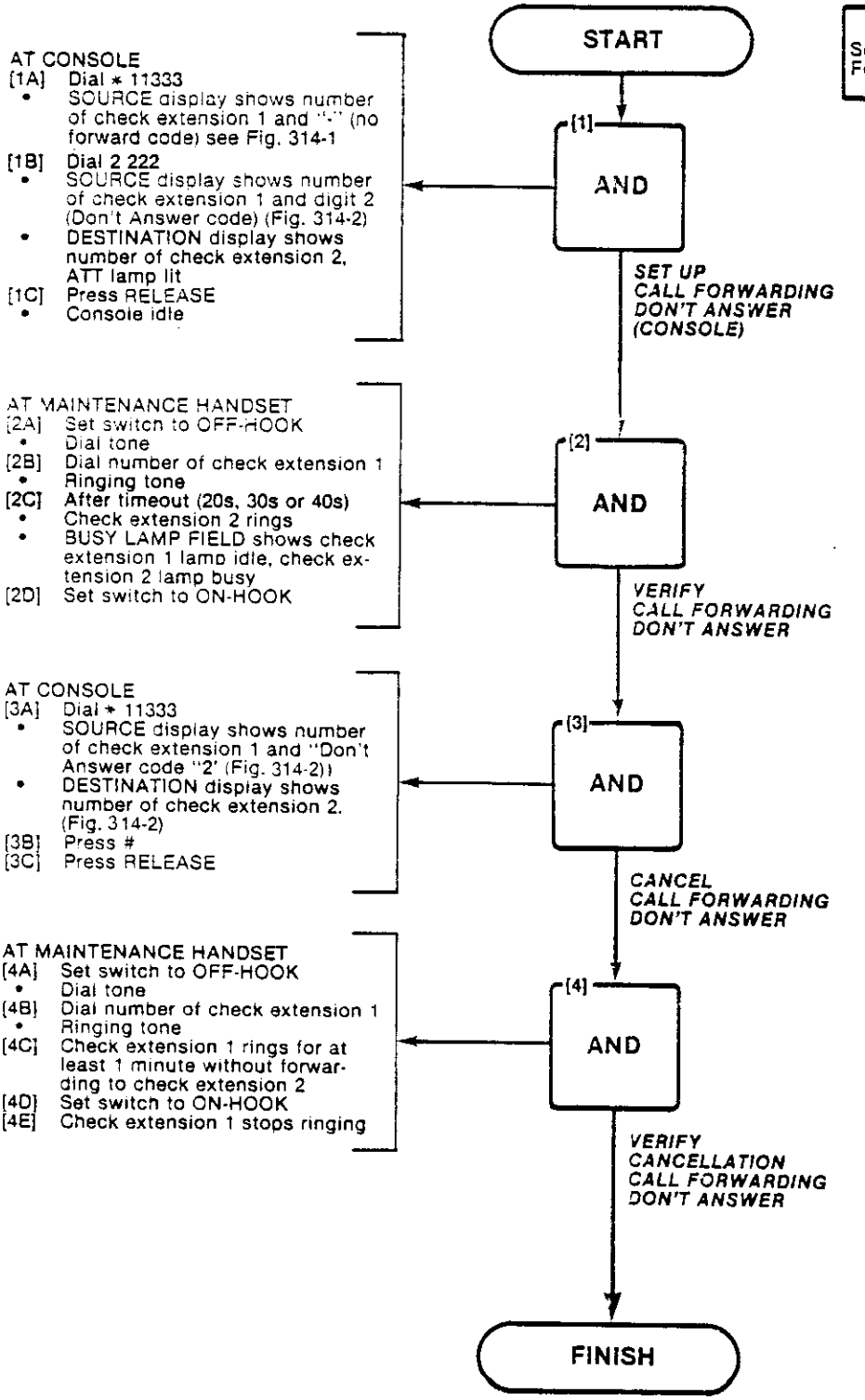

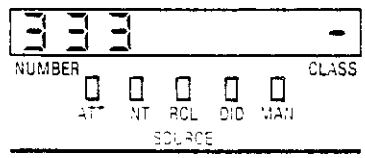

Fig. 314-1

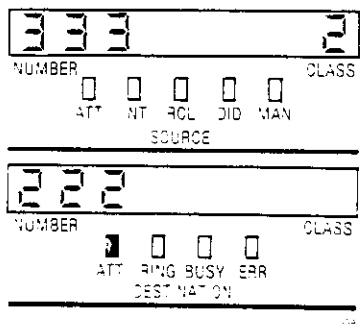

Fig. 314-2

ATTENDANT CALL FORWARDING - FOLLOW ME
MAP215-315
Issue 2, February 1982
Sheet 1 of 1

Note
See also MAP215-333 for External Call Forwarding

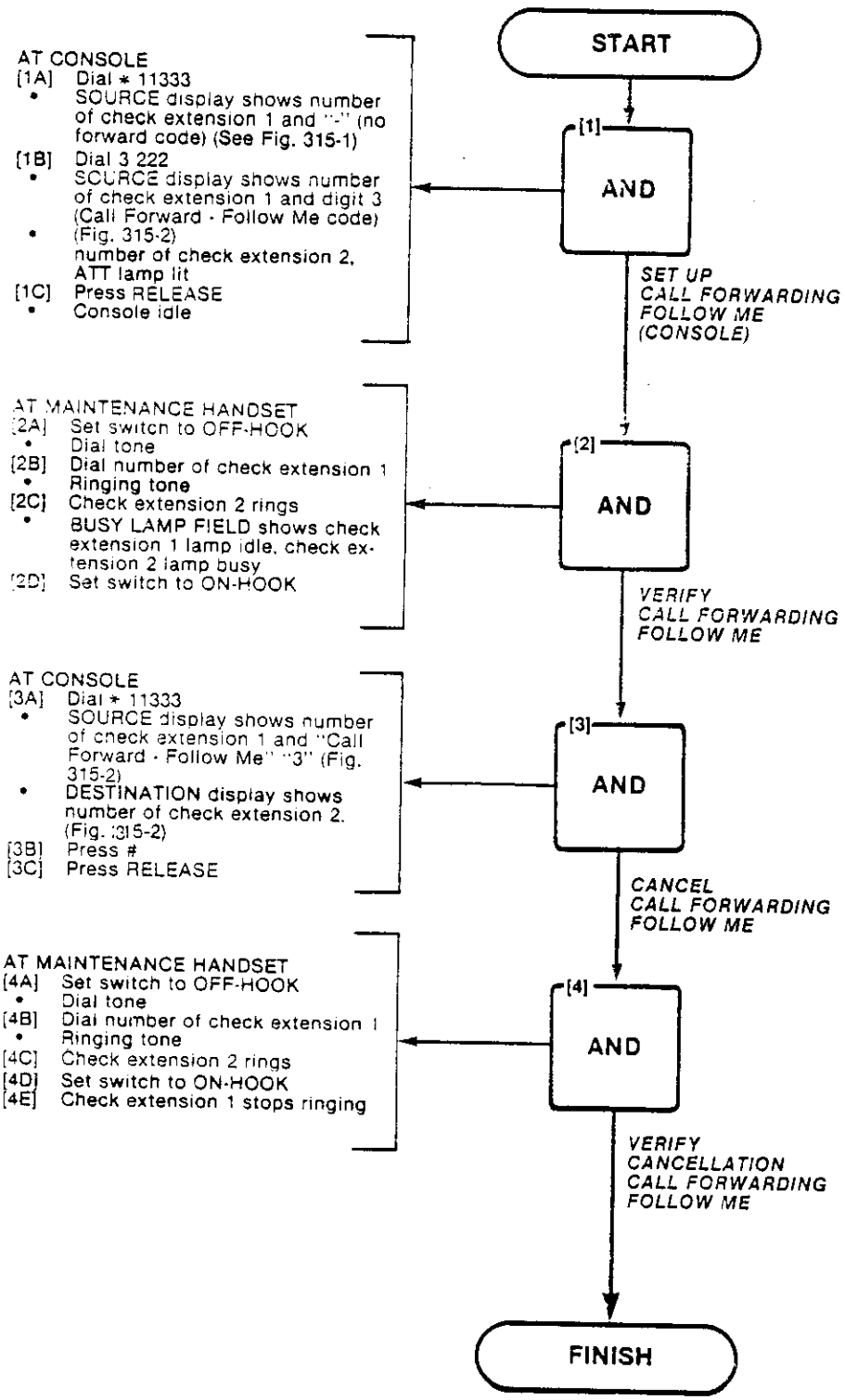

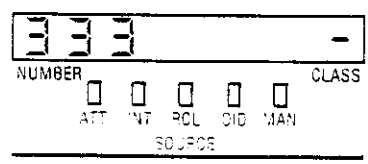

Fig. 315-1

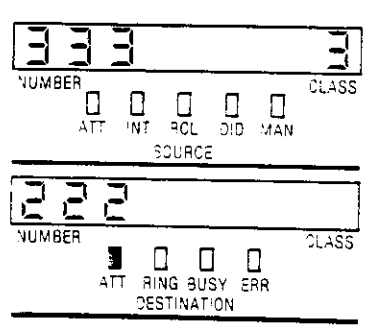

Fig. 315-2

ATTENDANT CALL FORWARDING BUSY/DON'T ANSWER
MAP215-316
Issue 2. February 1982
Sheet 1 of 1

Note
See also MAP215-335 for External Call Forwarding

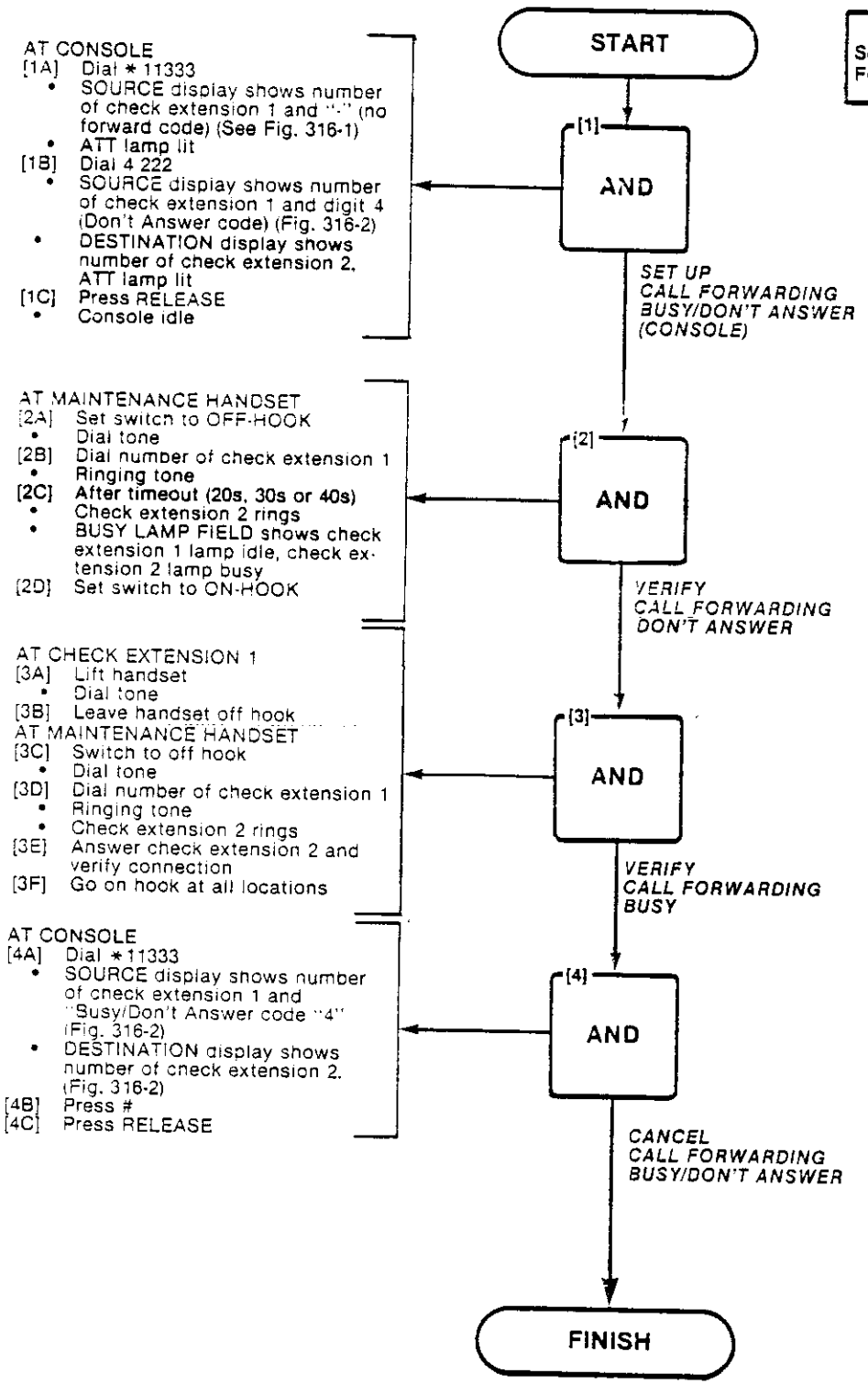

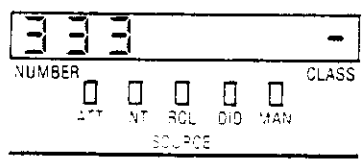

Fig. 316-1

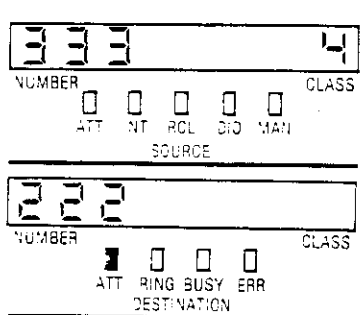

Fig. 316-2

ATTENDANT CONTROLLED CONFERENCE
MAP215-317
Issue 2, February 1982
Sheet 1 of 2

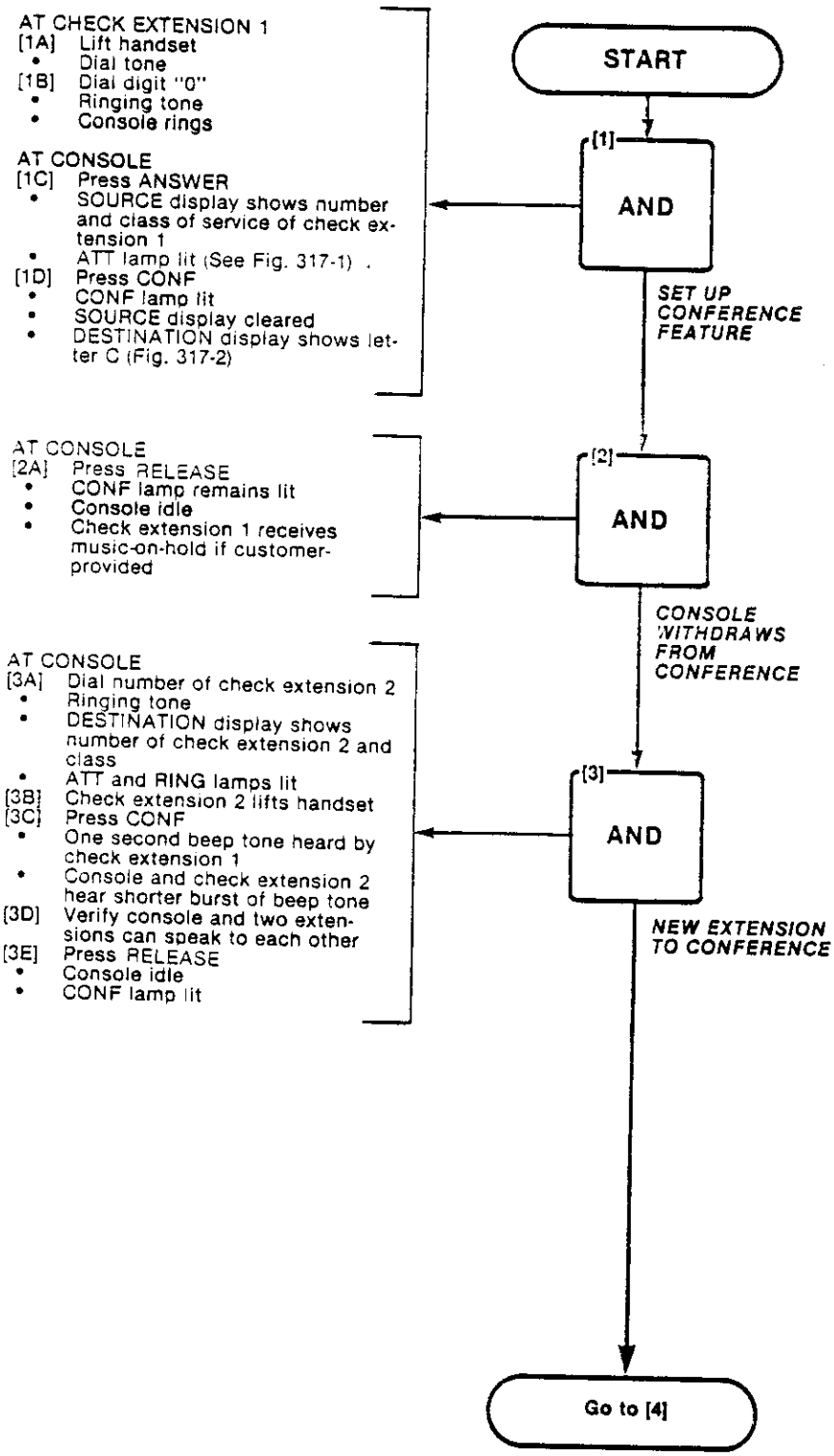

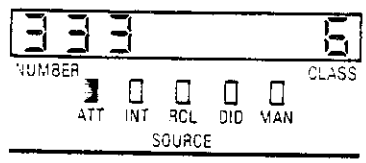

Fig. 317-1

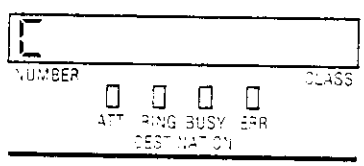

Fig. 317-2

ATTENDANT CONTROLLED CONFERENCE
MAP215-317
Issue 2, February 1982
Sheet 2 of 2

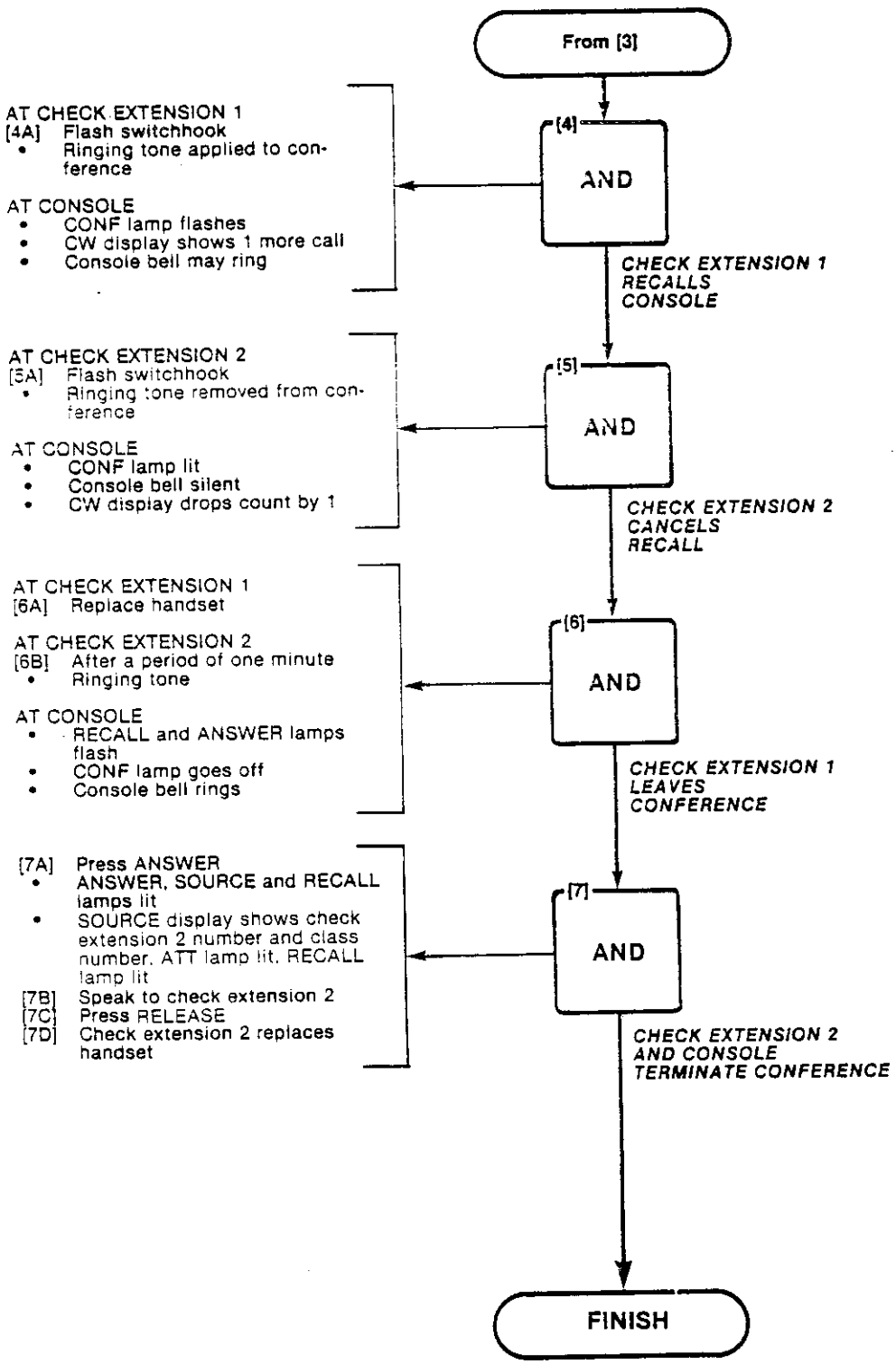

ATTENDANT STATION BUSY-OUT
MAP215-318
Issue 2, February 1982
Sheet 1 of 1

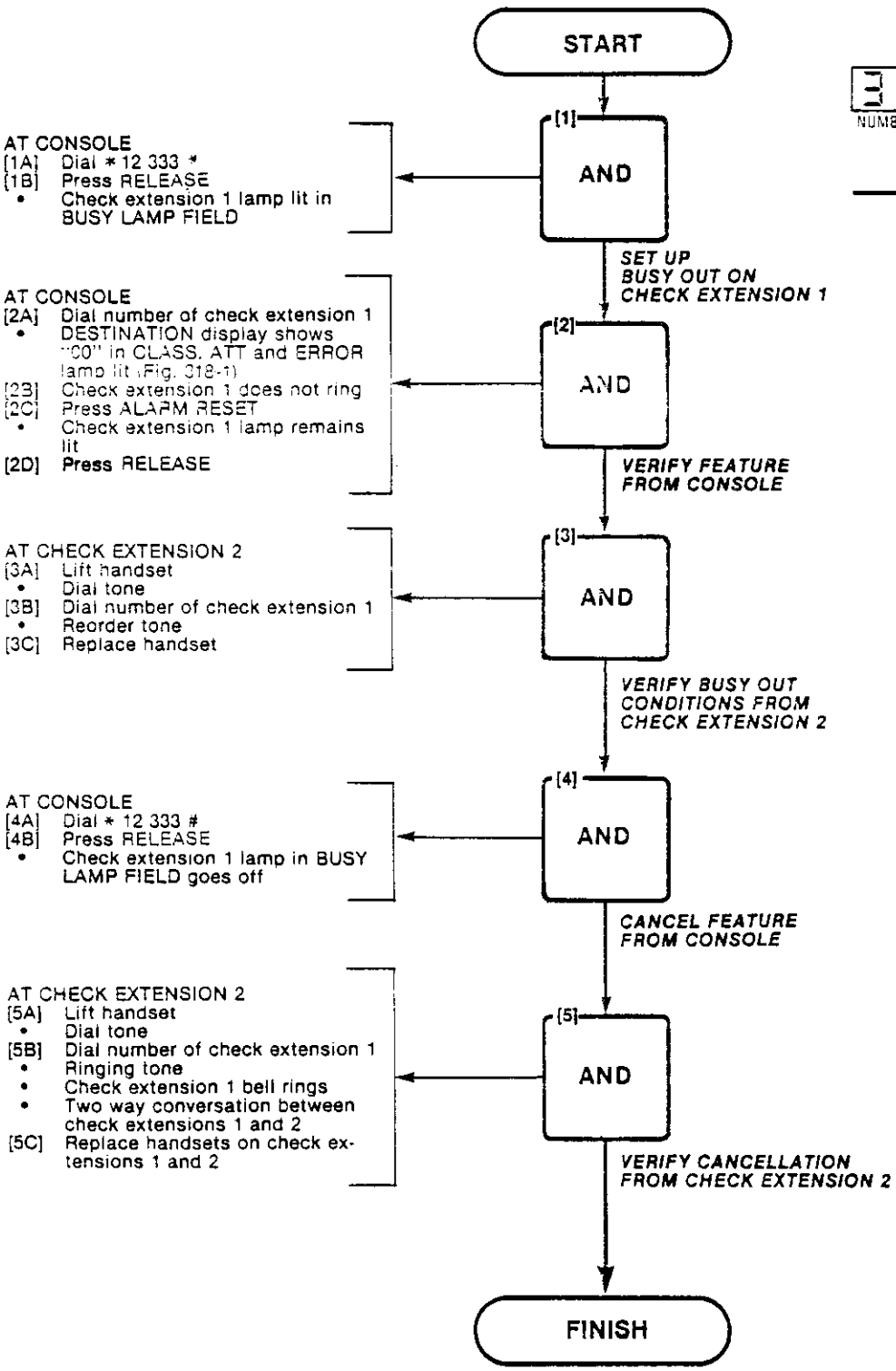

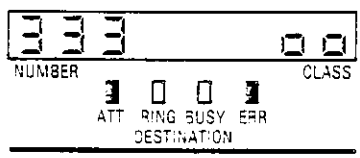

Fig. 318-1

CALL BLOCK
MAP215-319
Issue 2. February 1982
Sheet 1 of 2

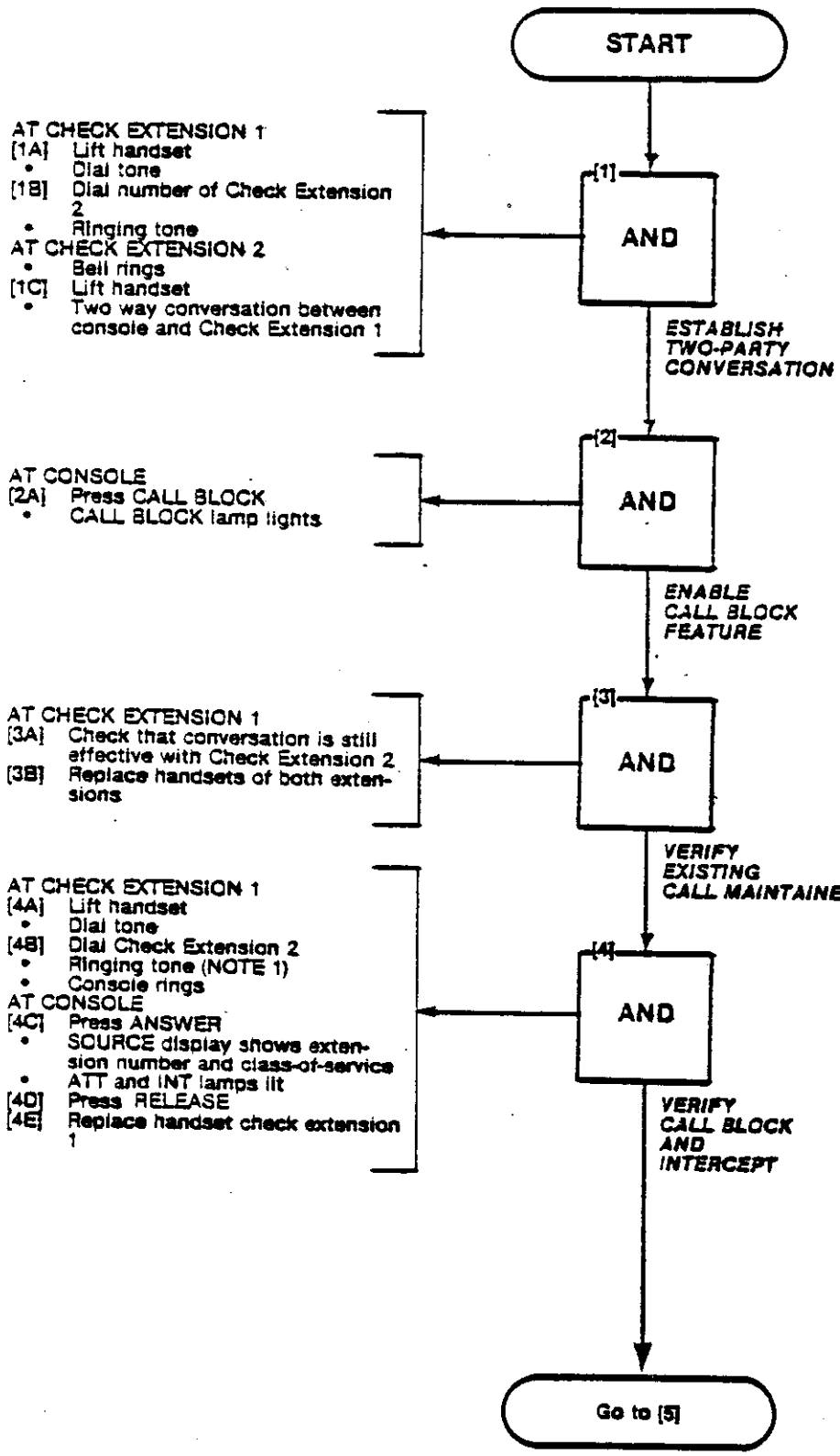

Note 1: Procedure applies if System Option 116 is in effect. If System Option 116 is not enabled then reorder tone is obtained at Step [4B], and Steps [4C] and [4D] do not apply.

Note 2: For an extension to be subject to Call Blocking it must have COS Option 63 in its COS.

CALL BLOCK
MAP215-319
Issue 2, February 1982
Sheet 2 of 2

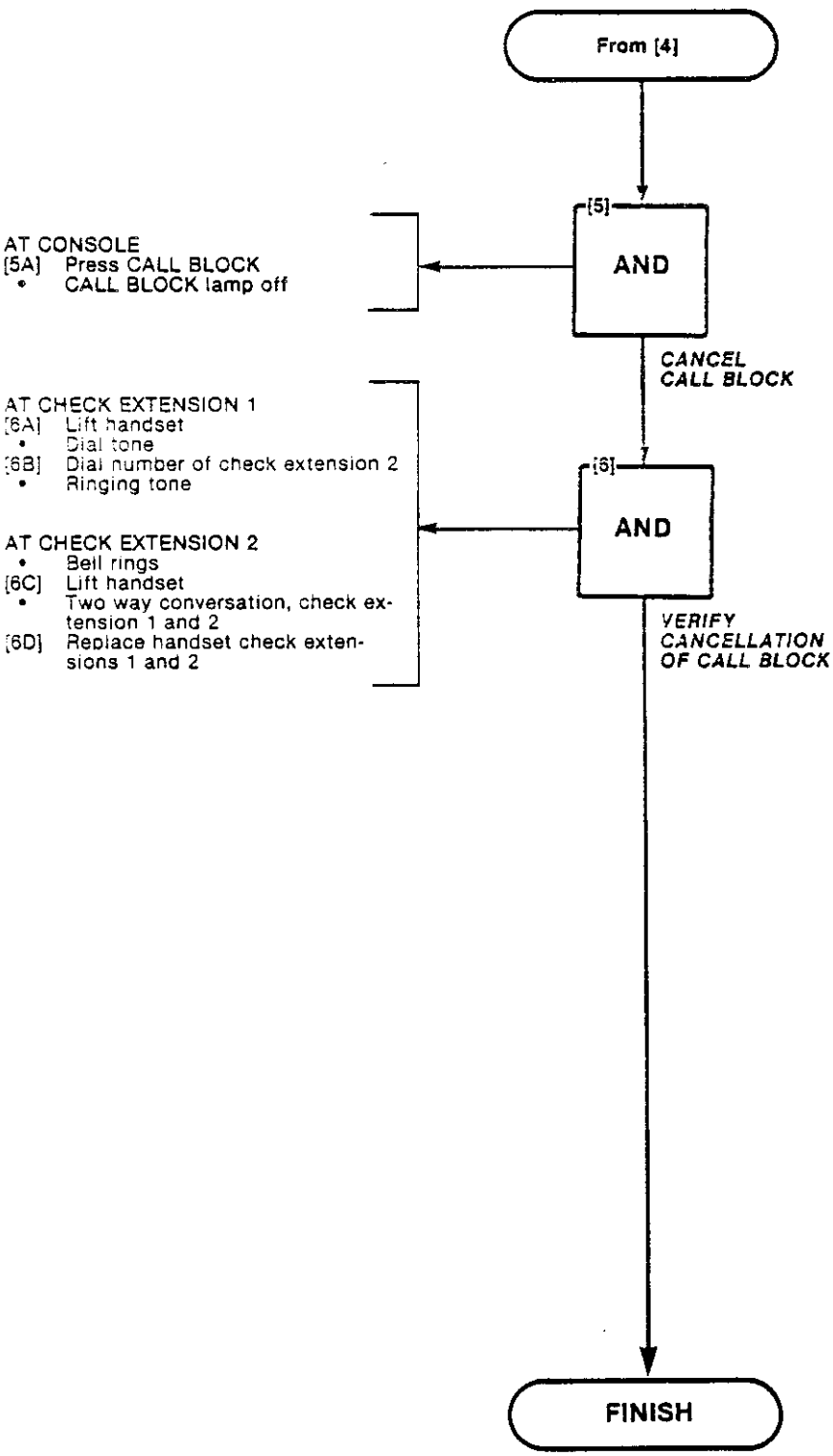

ATTENDANT DO NOT DISTURB (H/M)
MAP215-320
Issue 2, February 1982
Sheet 1 of 3

WARNING: Pressing DO NOT DISTURB key when console is active with an extension may activate or remove the feature at the extension.

START

AT CONSOLE
[1A] Press GUEST ROOM
- GUEST ROOM lamp lit

[1B] Dial number of check extension 1
- SOURCE display shows check extension number and message register, ATT lamp lit
- DESTINATION display shows room status code (Fig. 320-1)

[1C] Press DO NOT DSTB
- DO NOT DSTB lamp lit
- Check extension 1 lamp lit in Busy Lamp Field

[1D] Press RELEASE
- Console idle

[1] AND

DISPLAY GUEST ROOM STATUS AT CONSOLE

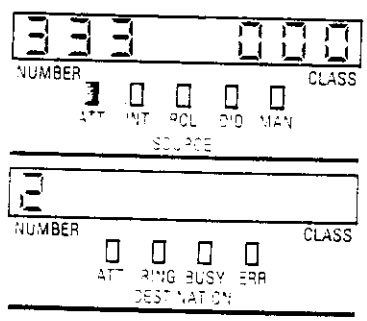

Fig. 320-1

AT CHECK EXTENSION 2
[2A] Lift handset
- Dial tone

[2B] Dial number of check extension 1
- Ringing tone (NOTE 1)
- Console rings
- DIAL 0 and ANSWER lamps flash

AT CONSOLE
[2C] Press ANSWER
- SOURCE display shows number of check extension 2 and class of service
- ATT and INT lamps lit

[2D] Two way conversation, console and check extension 2
[2E] Press RELEASE
[2F] Replace check extension 2 handset

[2] AND

VERIFY FEATURE FROM SECOND PARTY

Go to [3]

Note 1: Ringing is given in sub-step [2B] if System Option 174 is selected. Otherwise, reorder tone is given and remainder of step [2] is omitted.

ATTENDANT DO NOT DISTURB (H/M)
MAP215-320
Issue 2, February 1982
Sheet 2 of 3

From [2]

AT CONSOLE
[3A] Press DO NOT DSTB
- SOURCE display, Fig. 320-2, shows total number of rooms with "do not disturb" facility

[3B] Release DO NOT DSTB
- Console idle

[3] AND

DISPLAY NUMBER OF ROOMS WITH DO NOT DISTURB ACTIVATED

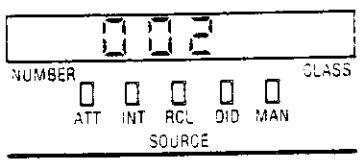

Fig. 320-2

AT CONSOLE
[4A] Dial check extension 1
- ERROR lamp lit in DESTINATION display
- DO NOT DSTB lamp flashes

[4B] Press DO NOT DSTB
- ERROR lamp goes out
- Ringing tone

AT CHECK EXTENSION 1
[4C] Check extension 1 rings
[4D] Lift handset
- Two way conversation, check extension 1 and console

[4E] Press RELEASE
- Console idle

[4F] Replace check extension 1 handset

[4] AND

VERIFY OVERRIDE FEATURE

AT CONSOLE
[5A] Press GUEST ROOM
- GUEST ROOM lamp lit

[5B] Dial check extension 1 number
- SOURCE display shows check extension number and message register
- DESTINATION display shows room status code (See Fig. 320-1)

[5C] Press DO NOT DSTB
- DO NOT DISTB lamp goes out
- Extension lamp lit in Busy Lamp Field

[5D] Press DO NOT DSTB
- DO NOT DSTB lamp goes off
- Extension lamp in BUSY LAMP FIELD goes off

[5E] Press RELEASE
- Console idle

[5] AND

CANCEL DO NOT DISTURB FEATURE

Go to [6]

ATTENDANT DO NOT DISTURB (H/M)
MAP215-320
Issue 2, February 1982
Sheet 3 of 3

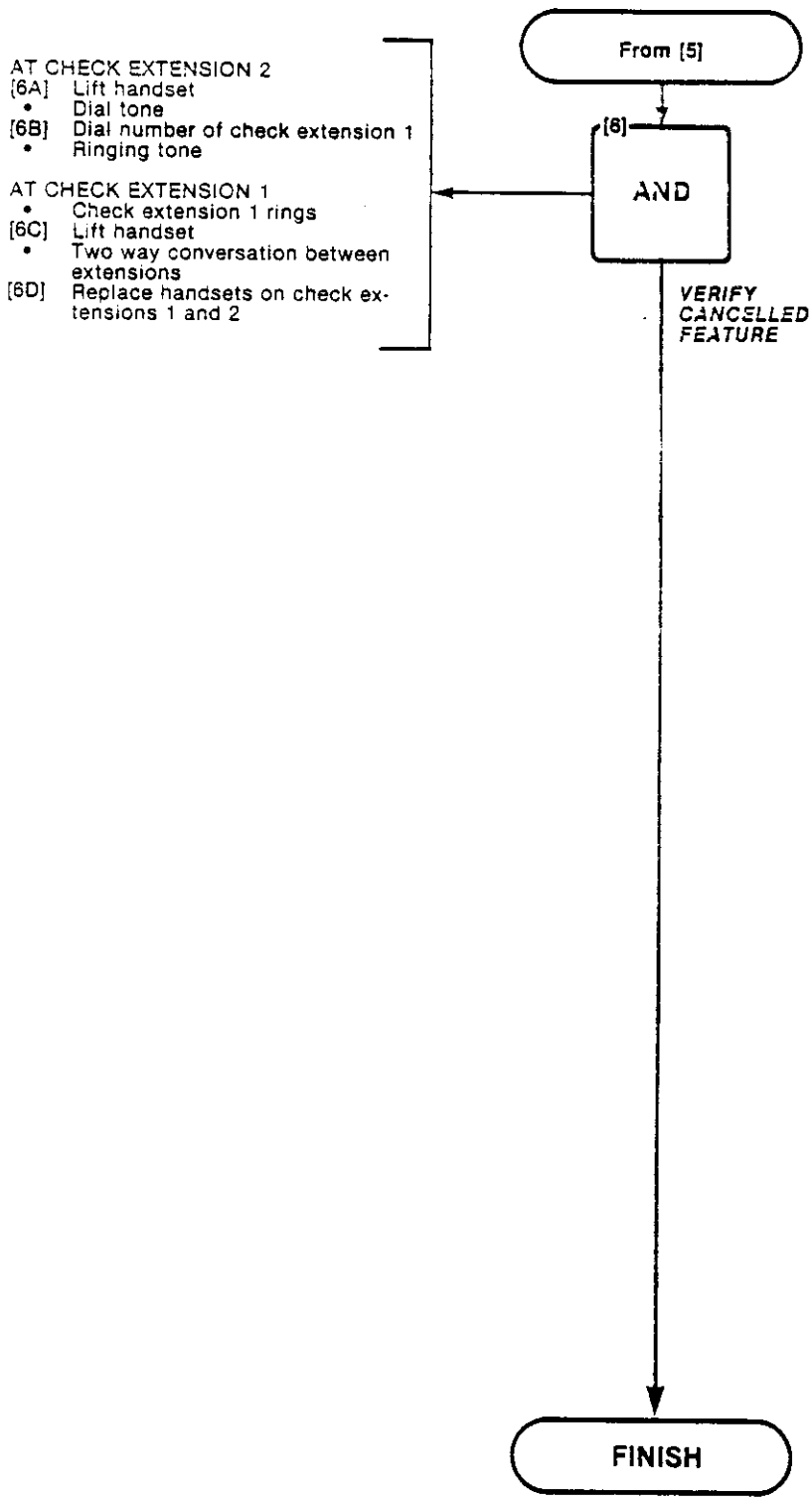

MESSAGE REGISTRATION (H/M)
MAP215-321
Issue 1, August 1981
Sheet 1 of 1

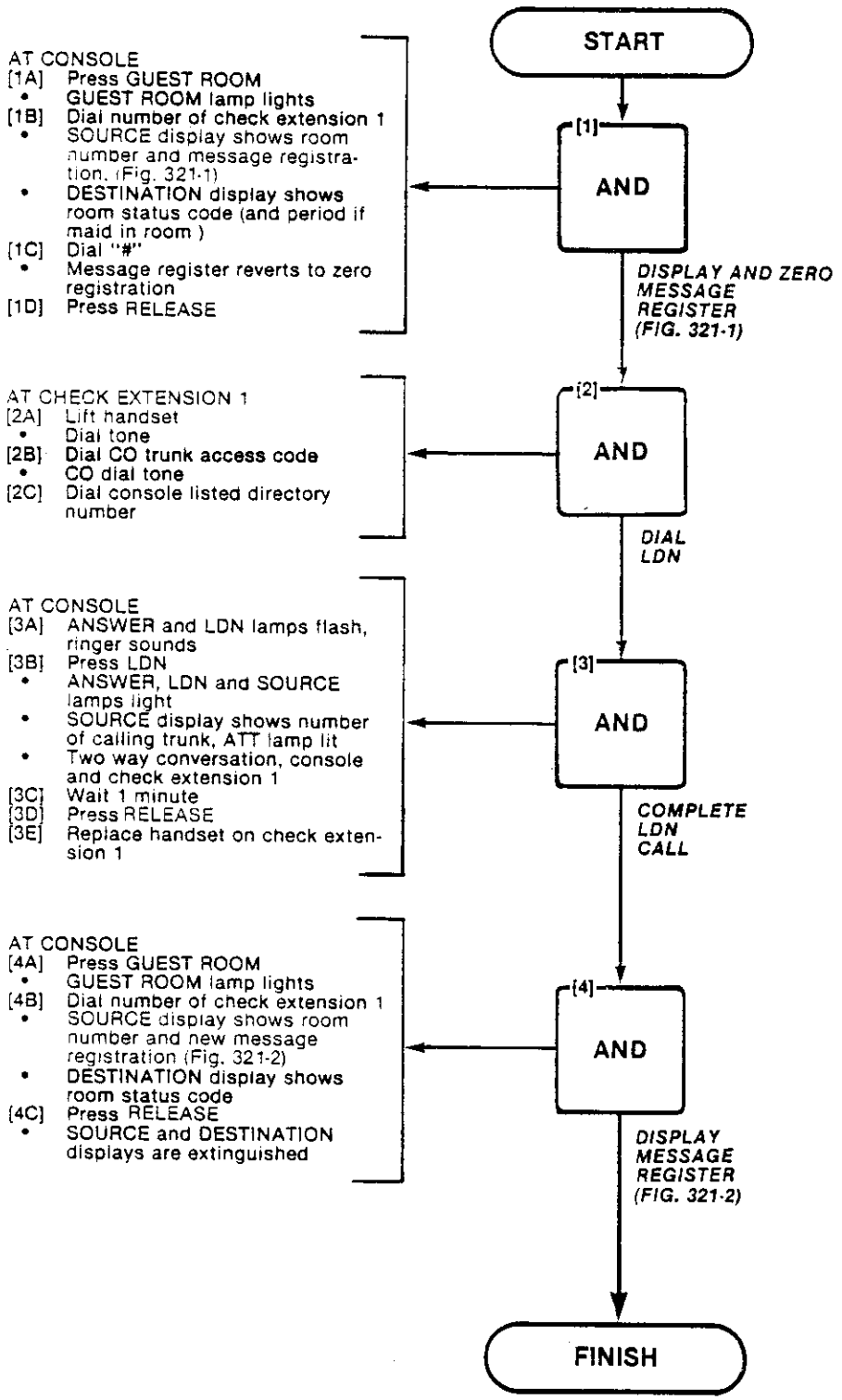

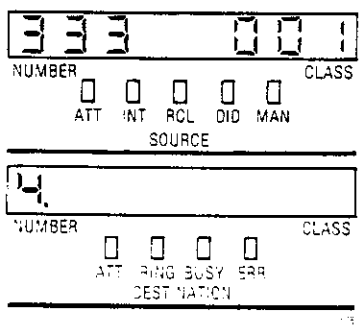

Fig. 321-1

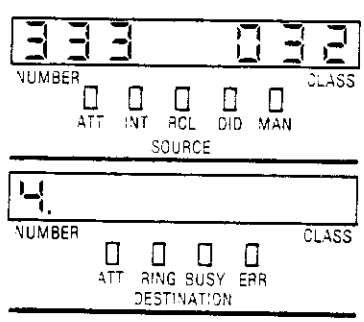

Fig. 321-2

CONTROLLED OUTGOING CALL RESTRICTION (H/M)
MAP215-322
Issue 2, February 1982
Sheet 1 of 2

Note: This MAP applies when console has ROOM RESTR. If ROOM STATUS see MAP215-323.

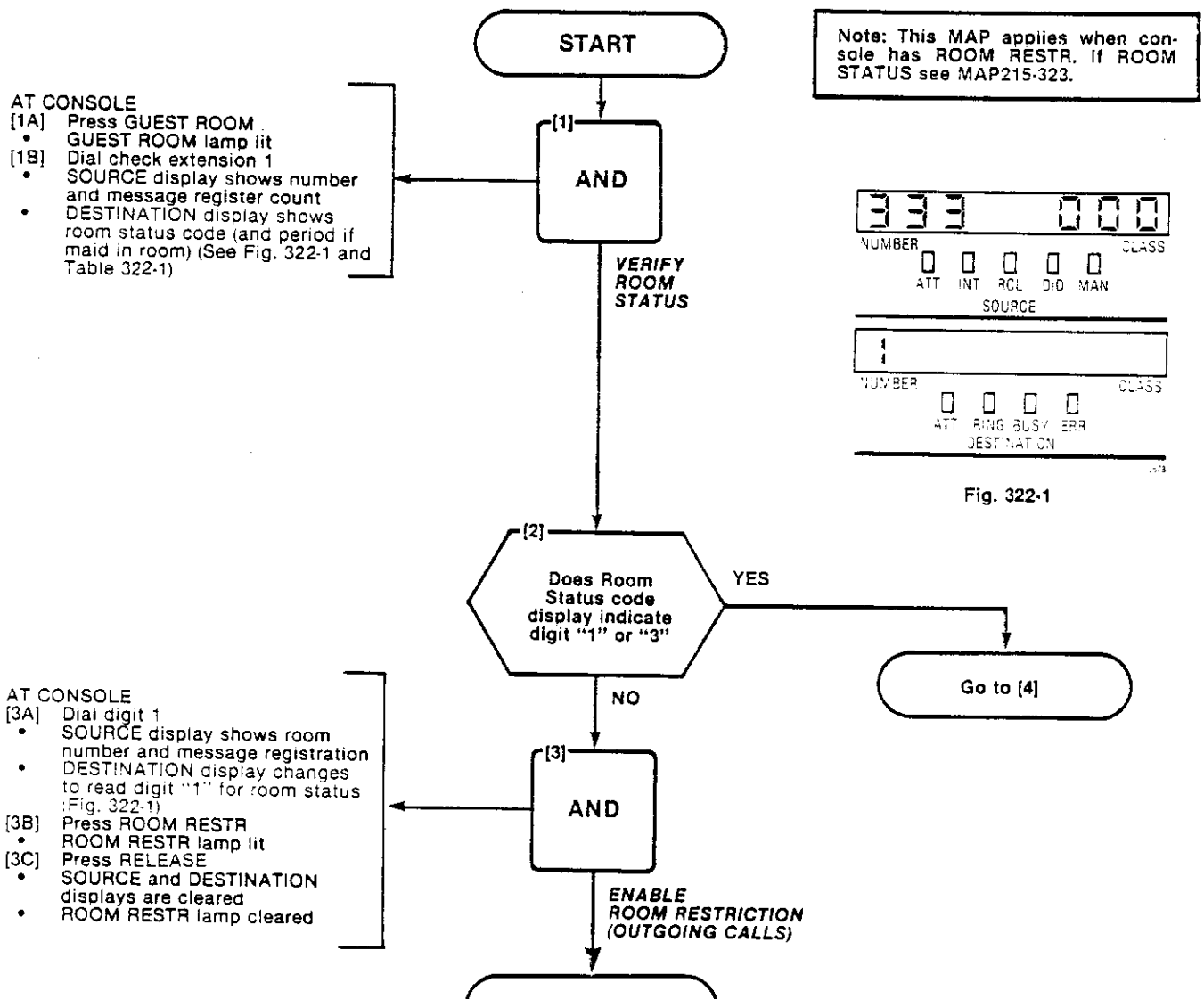

Fig. 322-1

TABLE 322-1 ROOM STATUS CODES

CODE	STATUS
1	Room is vacant and ready
2	Room is occupied and clean
3	Room is vacant but requires cleaning
4	Room is occupied but requires cleaning

CONTROLLED OUTGOING CALL RESTRICTION (H/M)
MAP215-322
Issue 2, February 1982
Sheet 2 of 2

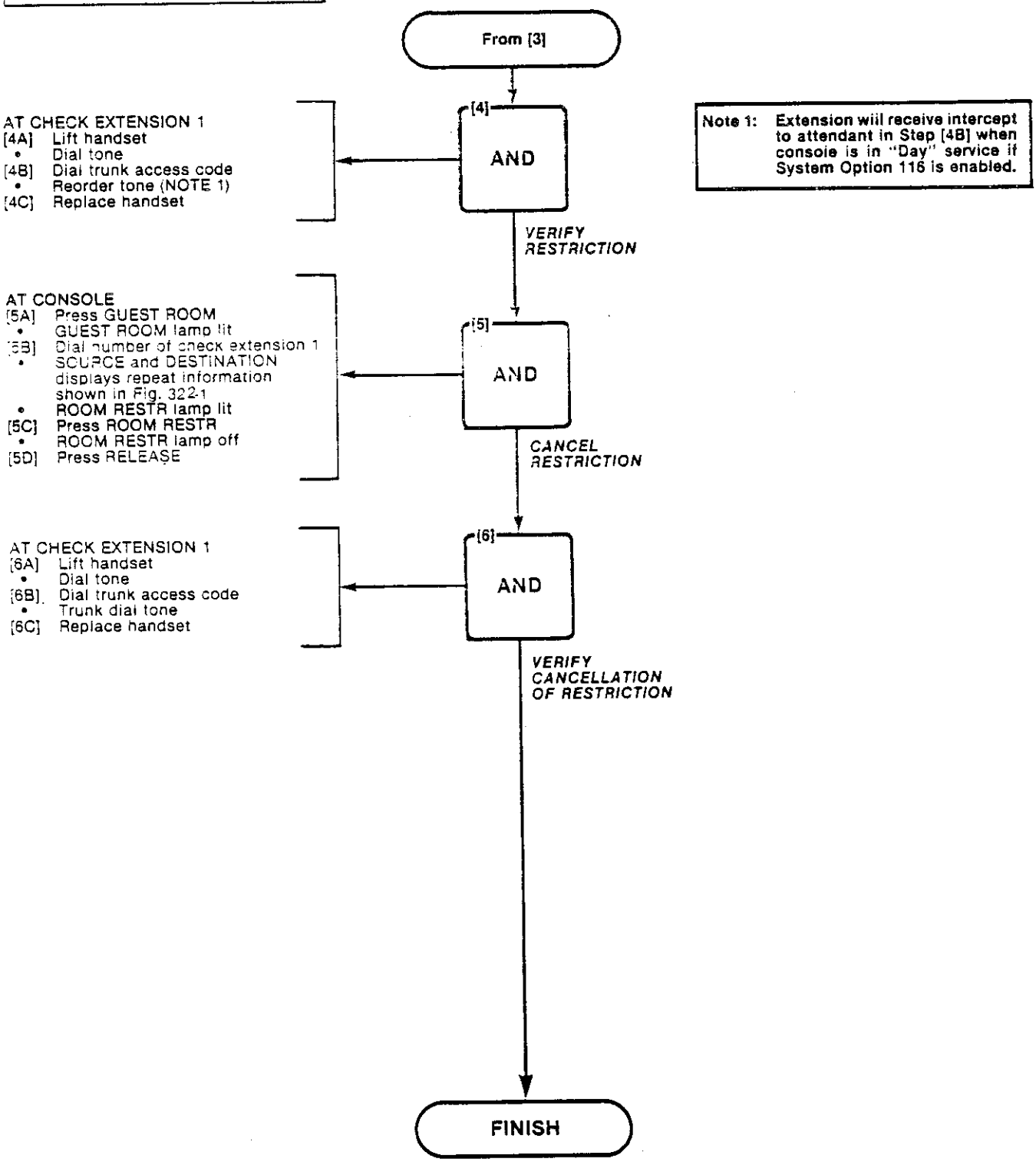

Note 1: Extension will receive intercept to attendant in Step [4B] when console is in "Day" service if System Option 116 is enabled.

ROOM STATUS (H/M)
MAP215-323
Issue 2. February 1982
Sheet 1 of 4

NOTES
(1) The single-digit codes in the following procedures have meanings shown in Tables 323-1 and 323-2
(2) Maid codes are dialed from room only, after the "Maid Access" code has been dialed (Table 323-2)

TABLE 323-1
ROOM STATUS CODES

STATUS CODE	STATUS
1	Room vacant and ready
2	Room occupied and clean
3	Room vacant, requires cleaning
4	Room occupied, requires cleaning

TABLE 323-2
MAID-DIALED CODES

MAID CODE	INDICATION (NOTE 2)
1	Maid in room, requires cleaning
2	Maid left room, status unchanged
3	Maid left room, room ready

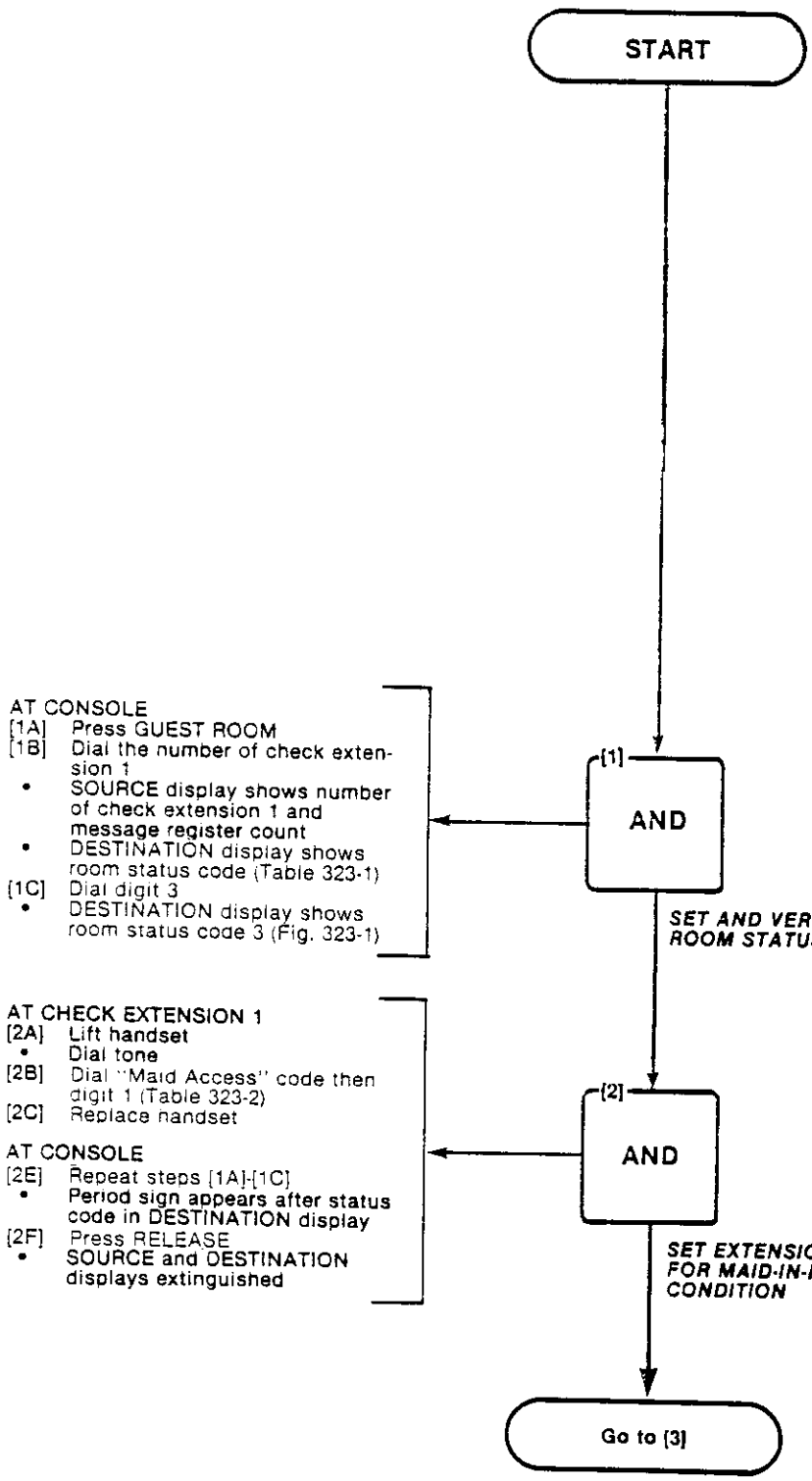

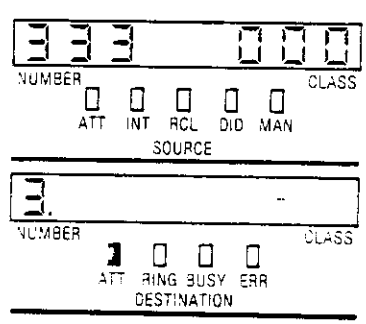

Fig. 323-1

ROOM STATUS (H/M)
MAP215-323
Issue 2, February 1982
Sheet 2 of 4

From [2]

AT CONSOLE
[3A] Press ROOM STATUS
[3B] Press and hold digit 0
- Check extension 1 lamp lit in BUSY LAMP FIELD
- SOURCE display shows total number of rooms with maids present Fig. 323-2

[3C] Release key pad digit 0
[3D] Press ROOM STATUS
[3E] Press and hold digit 3
- Check extension 1 lamp lit in BUSY LAMP FIELD
- SOURCE display, Fig. 323-2 changes to reflect total number of vacant rooms which require cleaning

[3F] Release key pad digit 3
- BUSY LAMP FIELD resumes normal indications

[3G] Press RELEASE

[3] AND

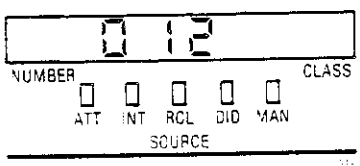

Fig. 323-2

VERIFY ROOM STATUS ON BUSY LAMP FIELD

AT CHECK EXTENSION 1
[4A] Lift handset
- Dial tone

[4B] Dial "Maid Access" code then digit 3
[4C] Replace handset

[4] AND

SET EXTENSION FOR ROOM READY AND NO MAID-IN-ROOM

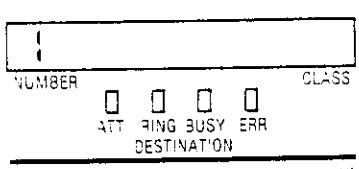

Fig. 323-3

AT CONSOLE
[5A] Press GUEST ROOM
[5B] Dial the number of check extension 1
- SOURCE display shows number of check extension 1, and message register count
- DESTINATION display shows room status code "1" (Fig. 323-3)

[5C] Press RELEASE
- SOURCE and DESTINATION displays extinguished

[5] AND

SET AND VERIFY ROOM STATUS ON DESTINATION DISPLAY (VACANT/READY)

[6A] Press ROOM STATUS
[6B] Press and hold key pad digit 0
- Check extension 1 lamp not lit in BUSY LAMP FIELD
- Repeat same entry per top right previous page

[6C] Release key pad digit 0
- BUSY LAMP FIELD resumes normal indications

[6D] Press ROOM STATUS
[6E] Press and hold key pad digit 1
- Check extension 1 lamp lit in BUSY LAMP FIELD
- SOURCE display, Fig. 323-2, changes to reflect total number of rooms which are ready for occupancy

[6F] Release key pad digit 1
- BUSY LAMP FIELD resumes normal lamp indication

[6G] Press RELEASE

[6] AND

VERIFY ROOM STATUS ON BUSY LAMP FIELD

Go to [7]

ROOM STATUS (H/M)
MAP215-323
Issue 2, February 1982
Sheet 3 of 4

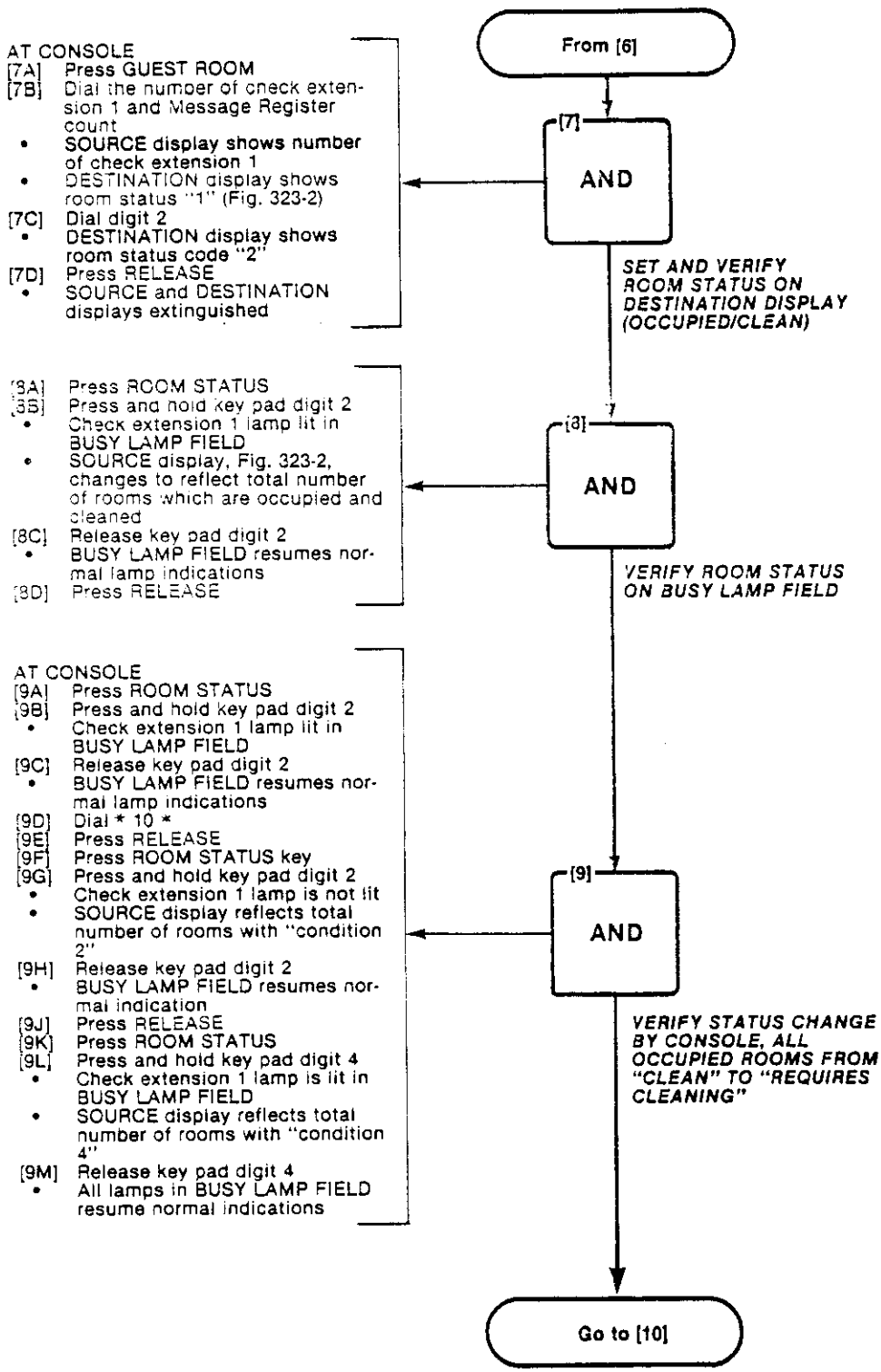

ROOM STATUS (H/M)
MAP215-323
Issue 2, February 1982
Sheet 4 of 4

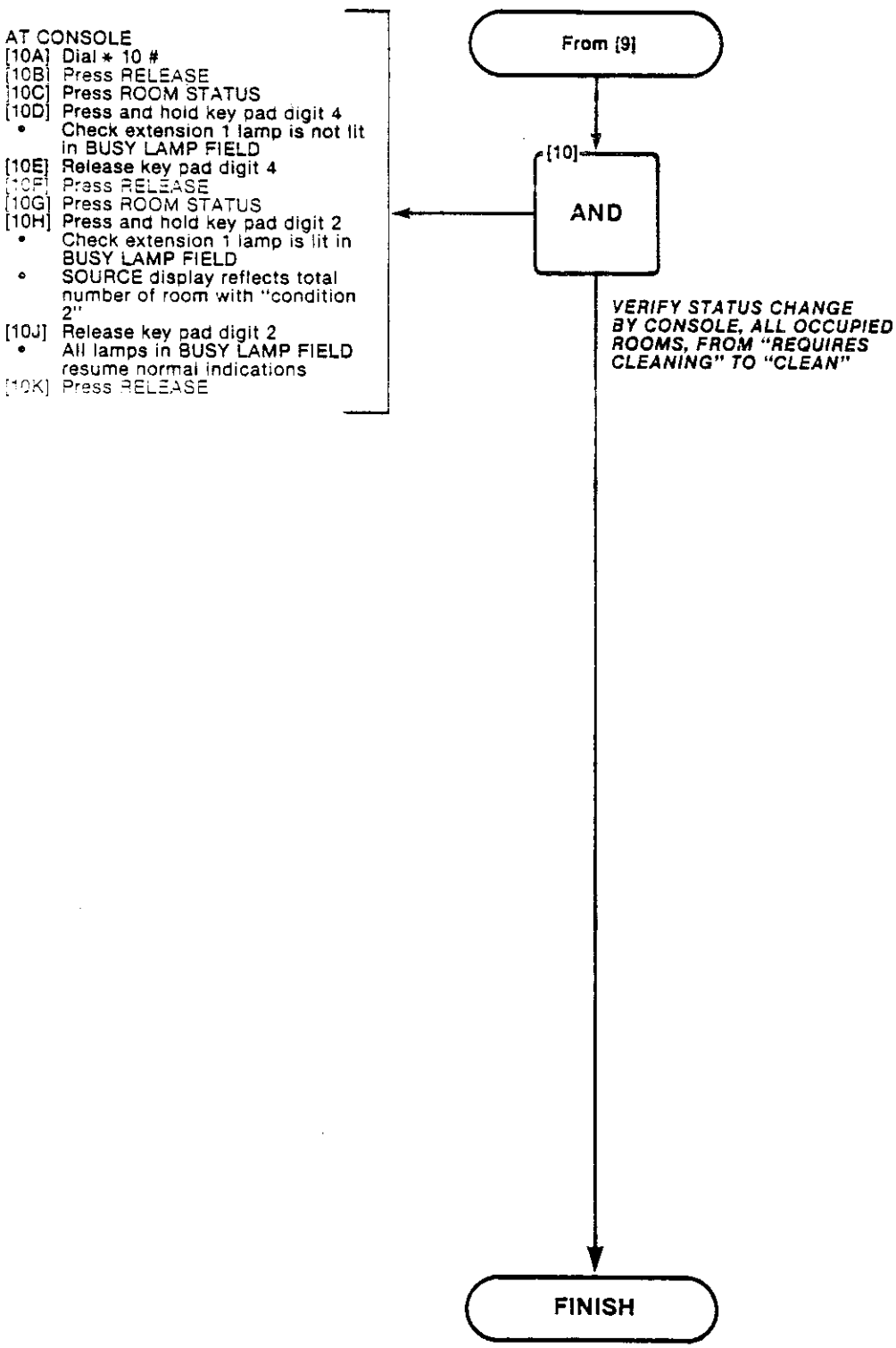

AUTOMATIC WAKE-UP
MAP215-324
Issue 2, February 1982
Sheet 1 of 2

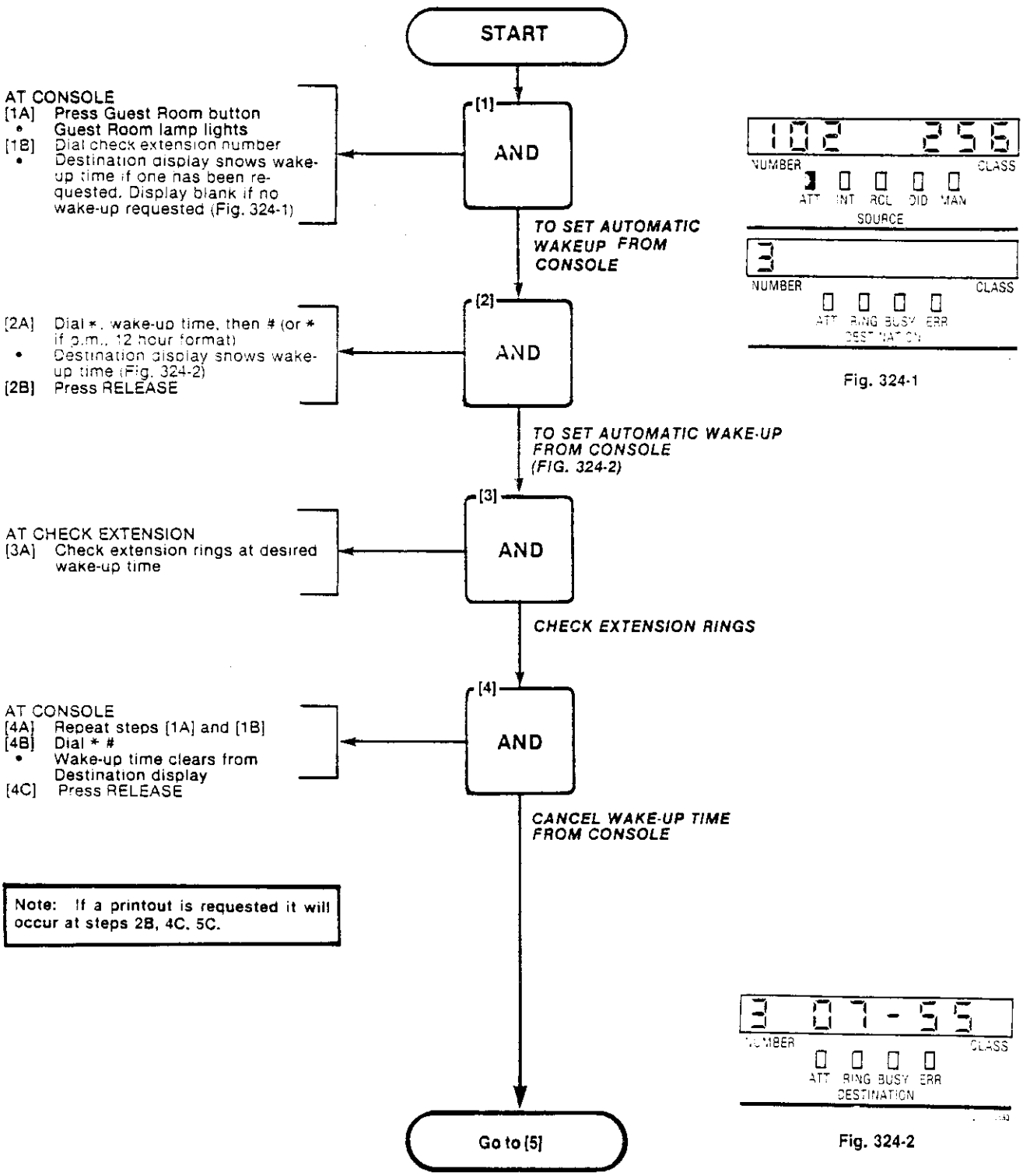

Fig. 324-1

Fig. 324-2

AUTOMATIC WAKE-UP
MAP215-324
Issue 2. February 1982
Sheet 2 of 2

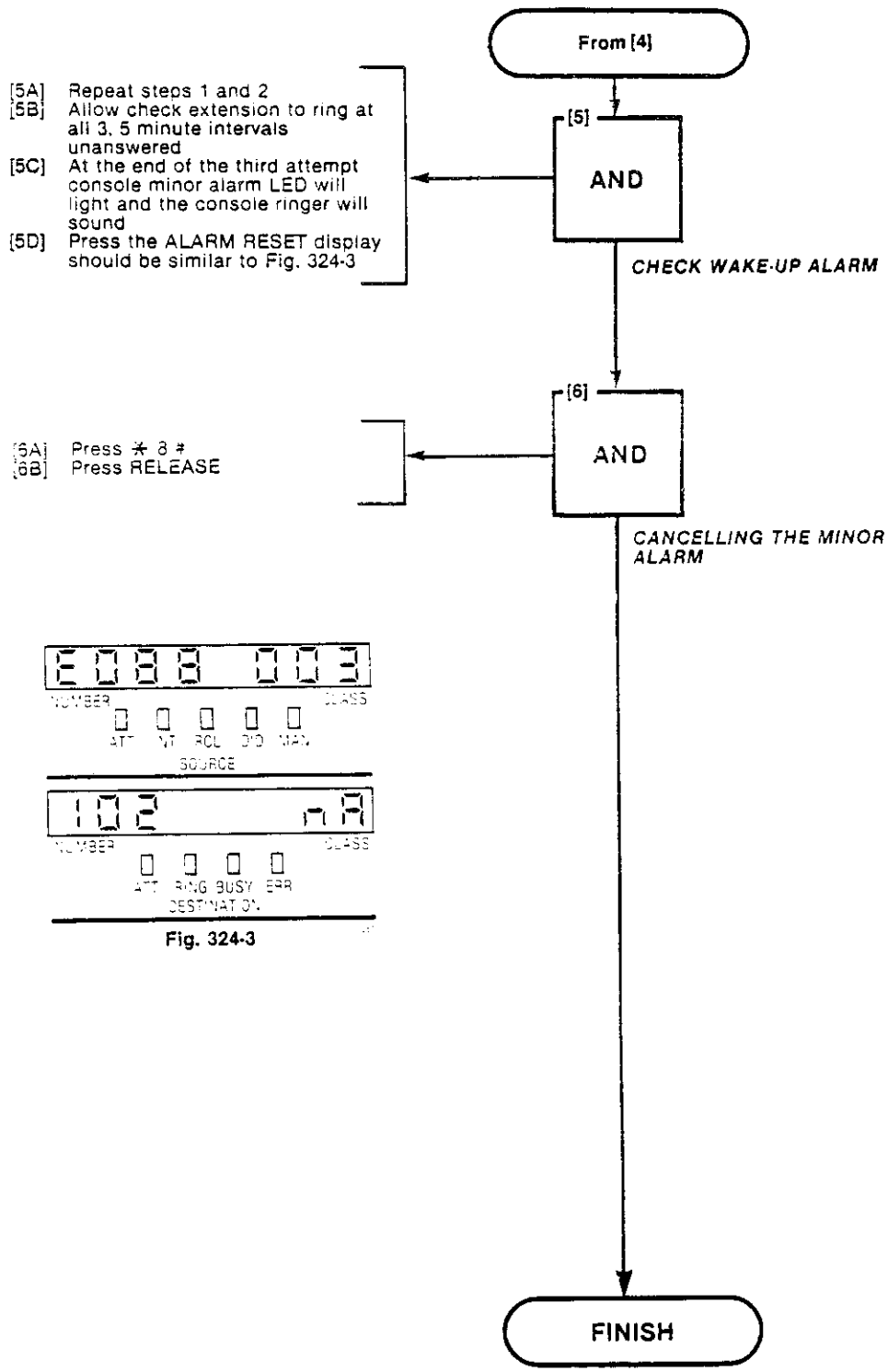

Fig. 324-3

MESSAGE WAITING (H/M)
MAP215-325
Issue 2, February 1982
Sheet 1 of 1

WARNING: Pressing MSGE WAIT key when console is active with an extension may activate or remove the feature at the extension.

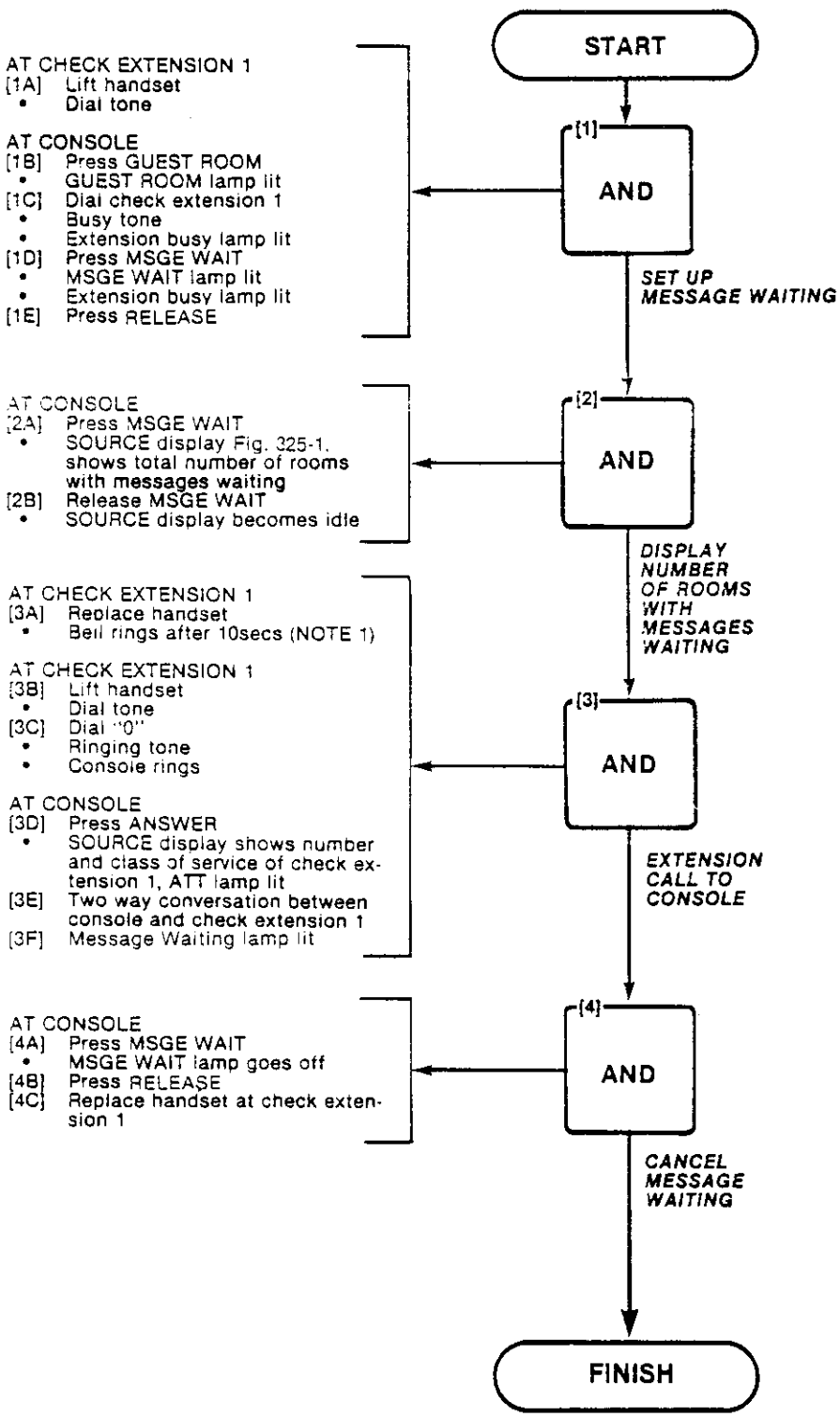

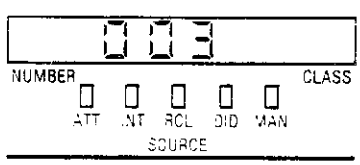

Fig. 325-1

Note 1: The lamp flash facility to flash telephone fitted with lamp is available on PABX line cards bearing part number 9110-010. Either option 137 for lamp flash or option 138 for bell ring may be programmed, but not both.

CONSOLE DATE DISPLAY AND DATE UTILITY
MAP215-326
Issue 2, February 1982
Sheet 1 of 1

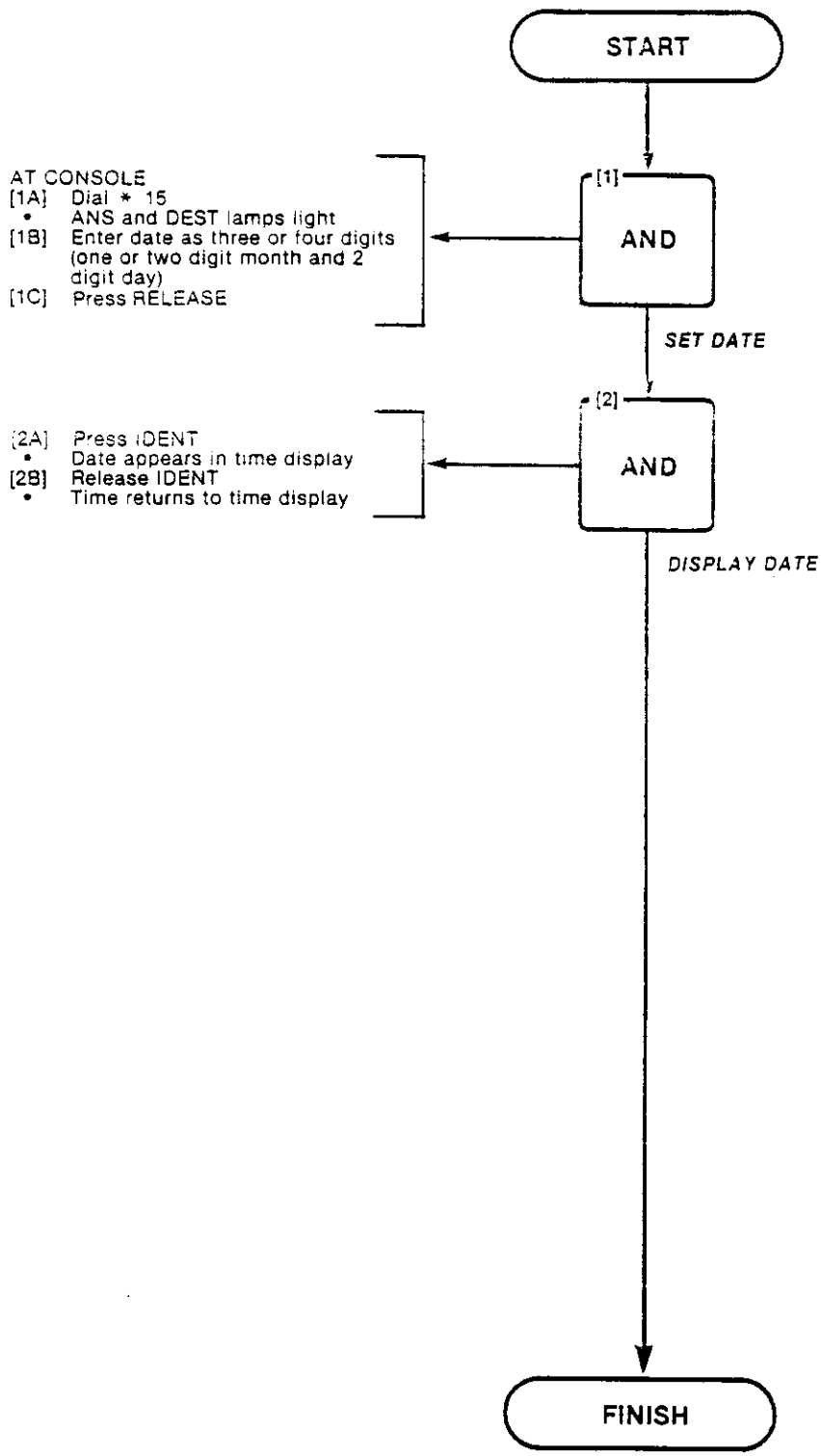

CUSTOMER PROGRAM DUMP/LOAD
MAP215-327
Issue 2. February 1982
Sheet 1 of 2

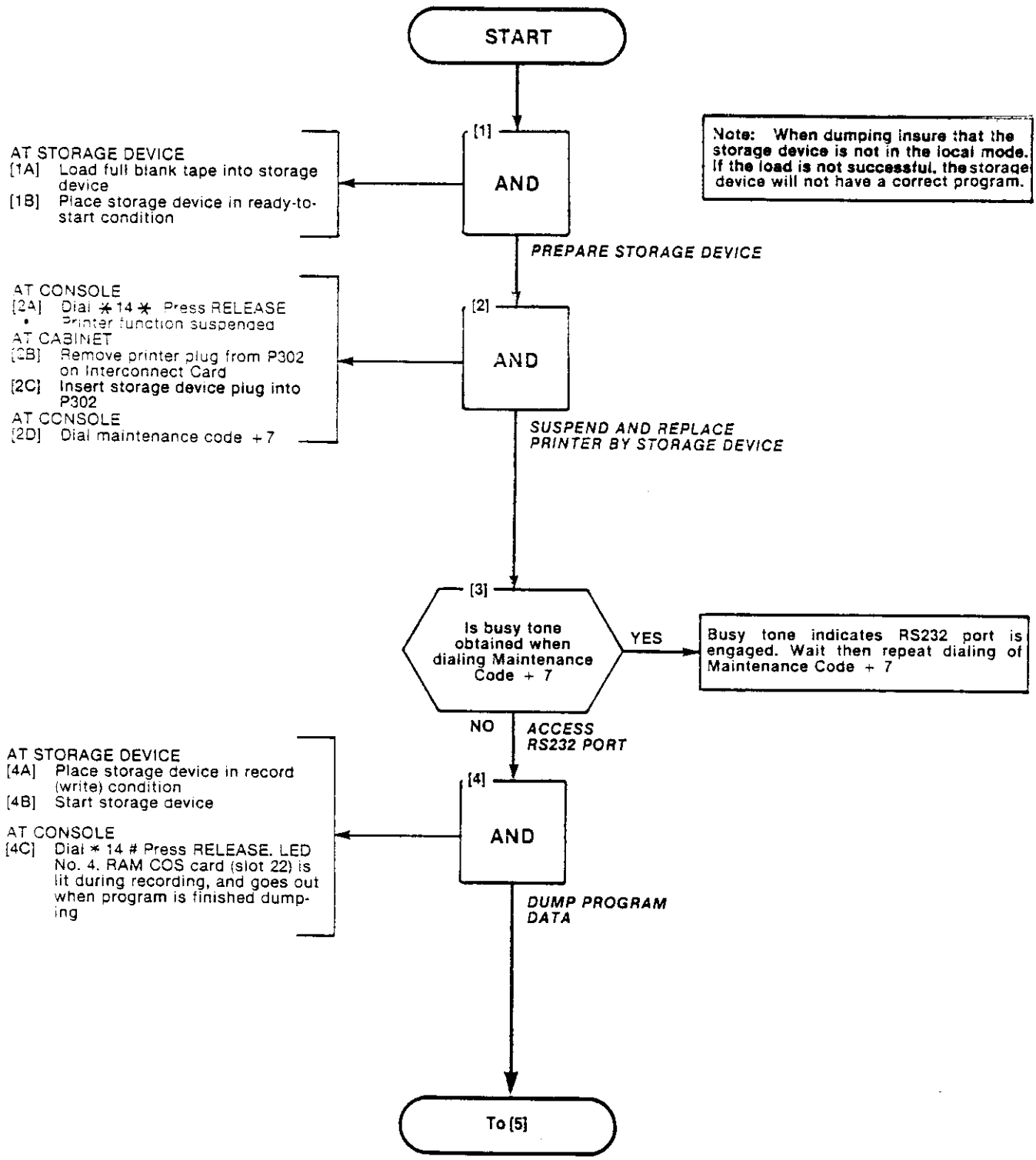

CUSTOMER PROGRAM DUMP/LOAD
MAP215-327
Issue 2, February 1982
Sheet 2 of 2

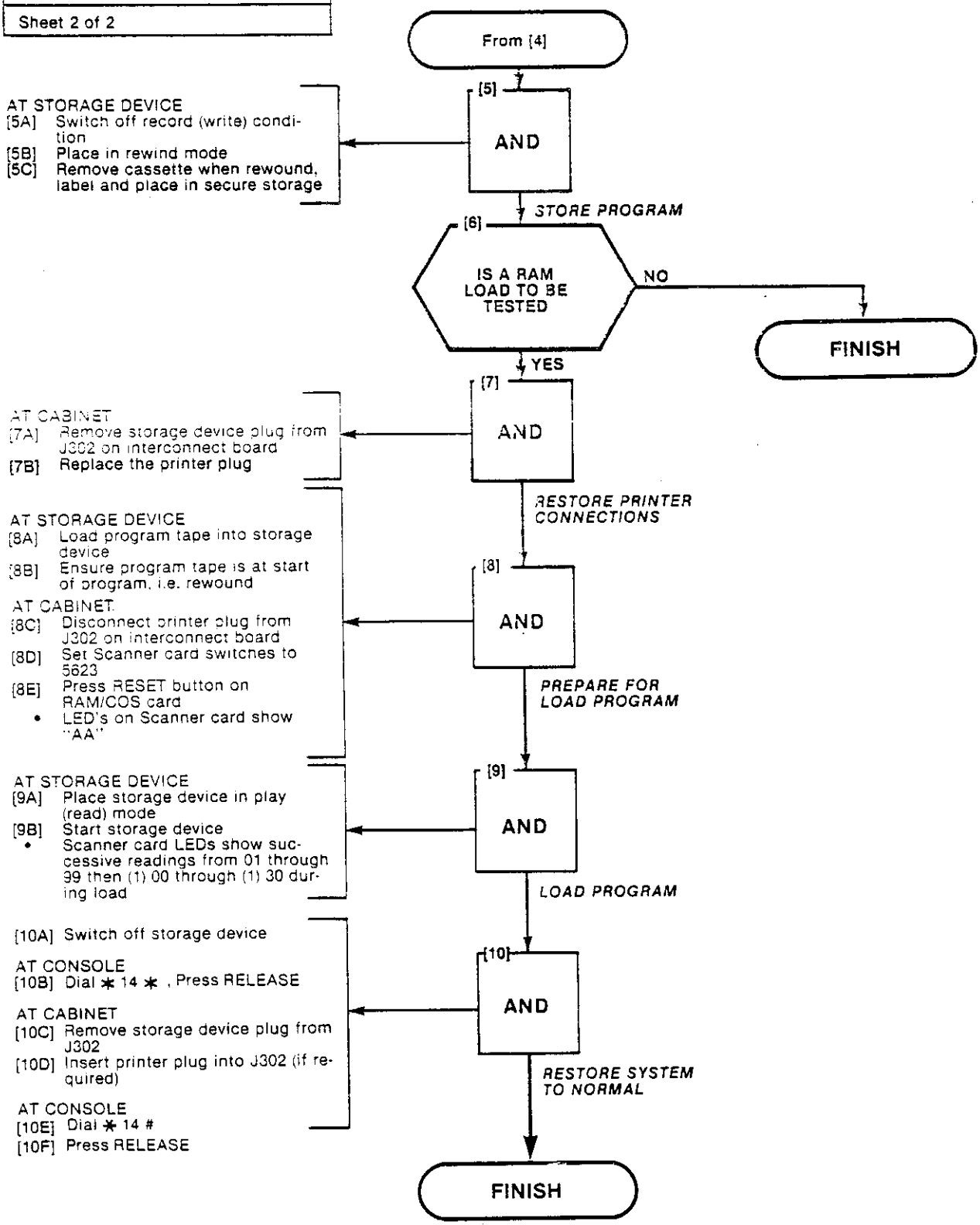

CONTROLLING THE PRINTER
MAP215-328
Issue 2, February 1982
Sheet 1 of 1

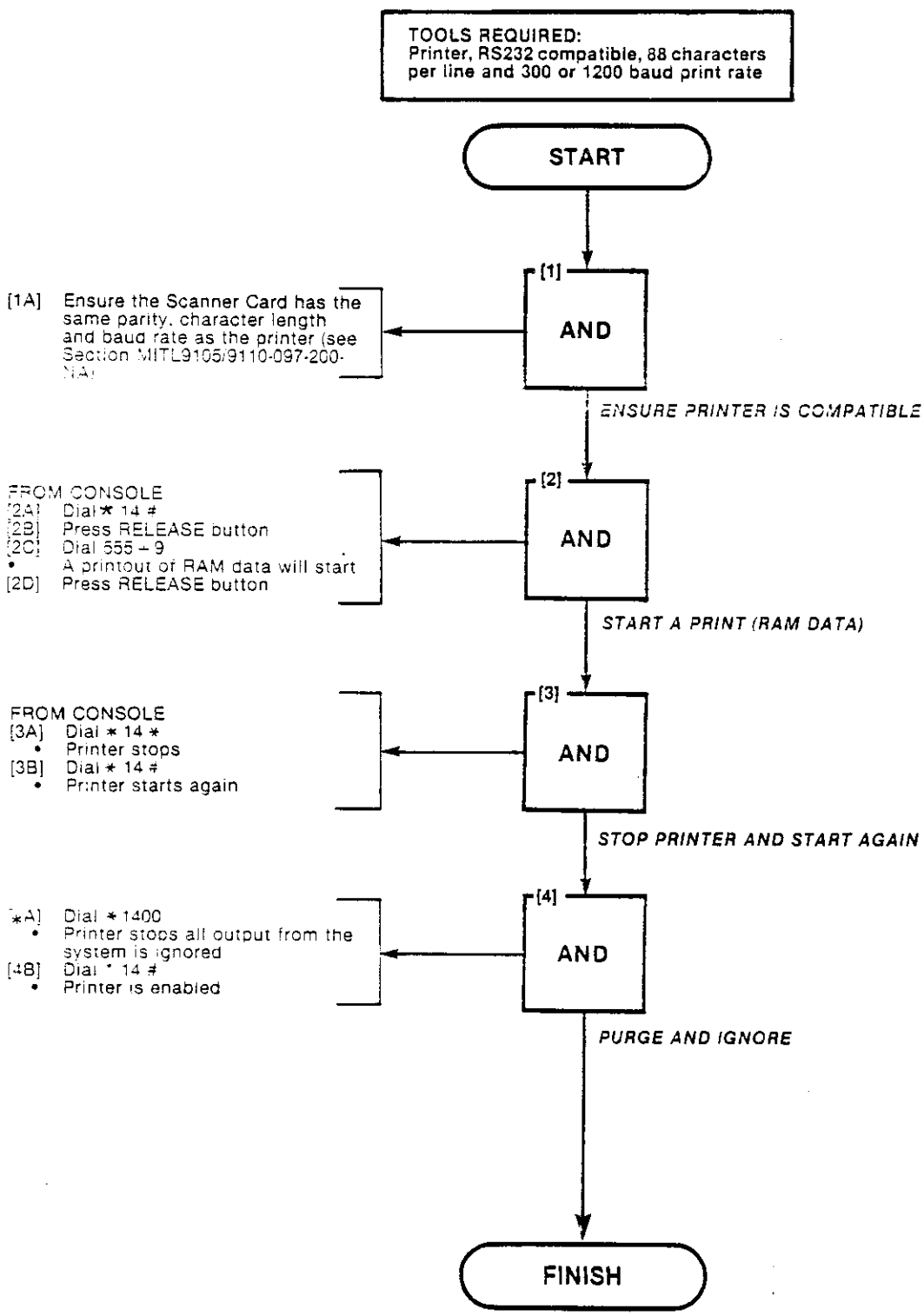

ROOM AUDIT
MAP215-329
Issue 2, February 1982
Sheet 1 of 1

START

[1] Is Printer connected

NO

YES

Note: Ensure Printer is not in local mode.

[2] AND

[2A] Printer must:
- Meet EIA RS232 requirements
- Be capable of 88 characters per line
- Be capable of 300 or 1200 baud

[2B] Connect Printer to system RS232 port

CONNECT PRINTER

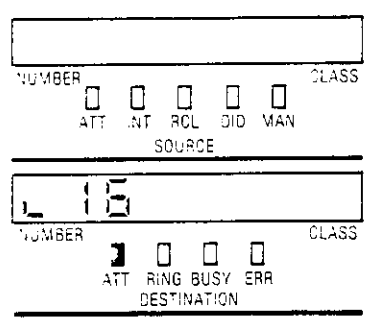

Fig. 329-1

[3] AND

AT CHECK EXTENSION
[3A] Complete a number of calls to local directory numbers

VALUES ENTERED IN CHECK EXTENSION MESSAGE REGISTER

[4] AND

AT CONSOLE
[4A] Dial * 16 (Fig. 329-1)
[4B] Press RELEASE
- Printout of entries produced

START AUDIT

FINISH

SYSTEM IDENTIFIER
MAP215-330
Issue 2, February 1982
Sheet 1 of 1

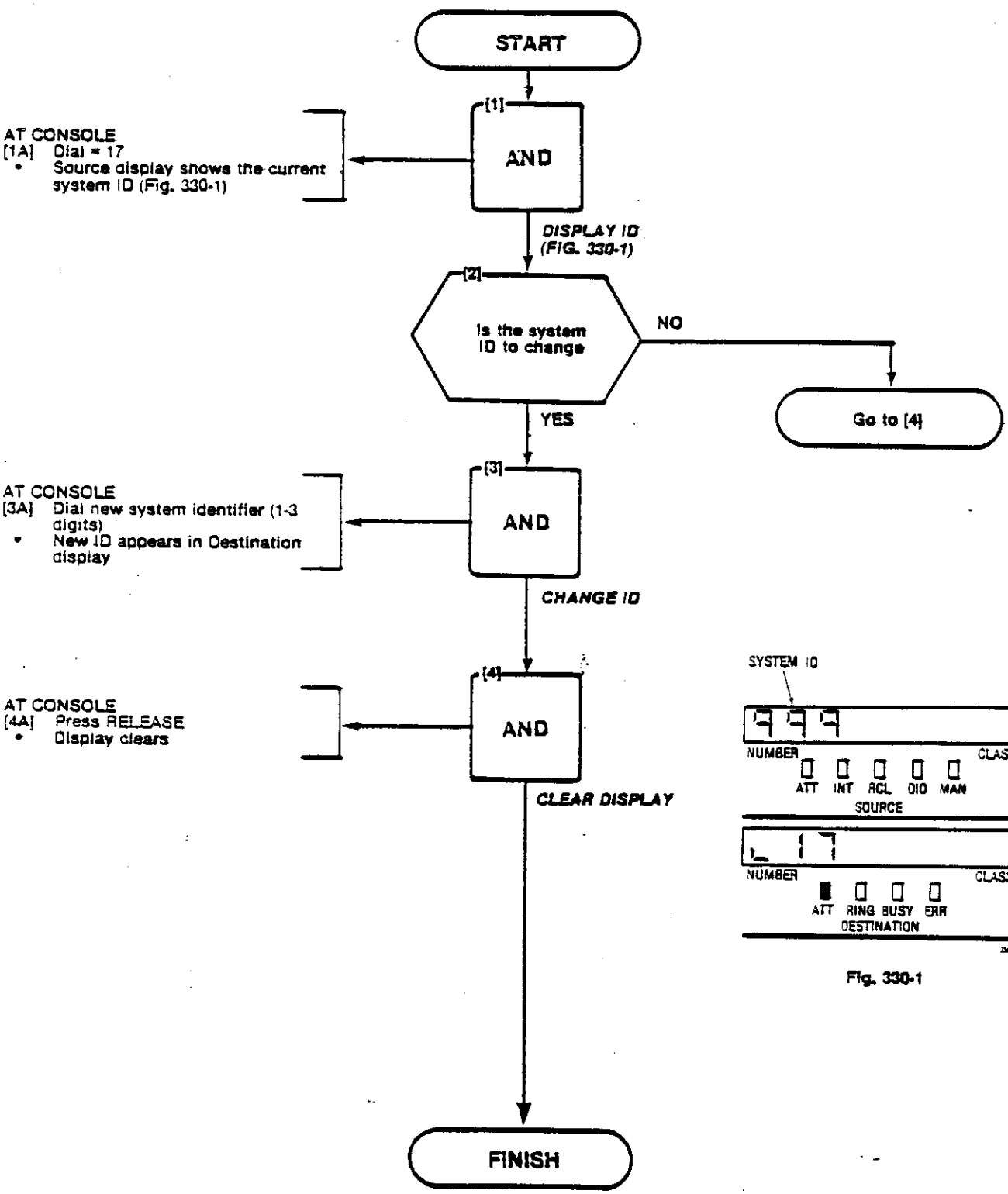

Fig. 330-1

COMMON USE SPEED CALL
MAP215-331
Issue 2, February 1982
Sheet 1 of 1

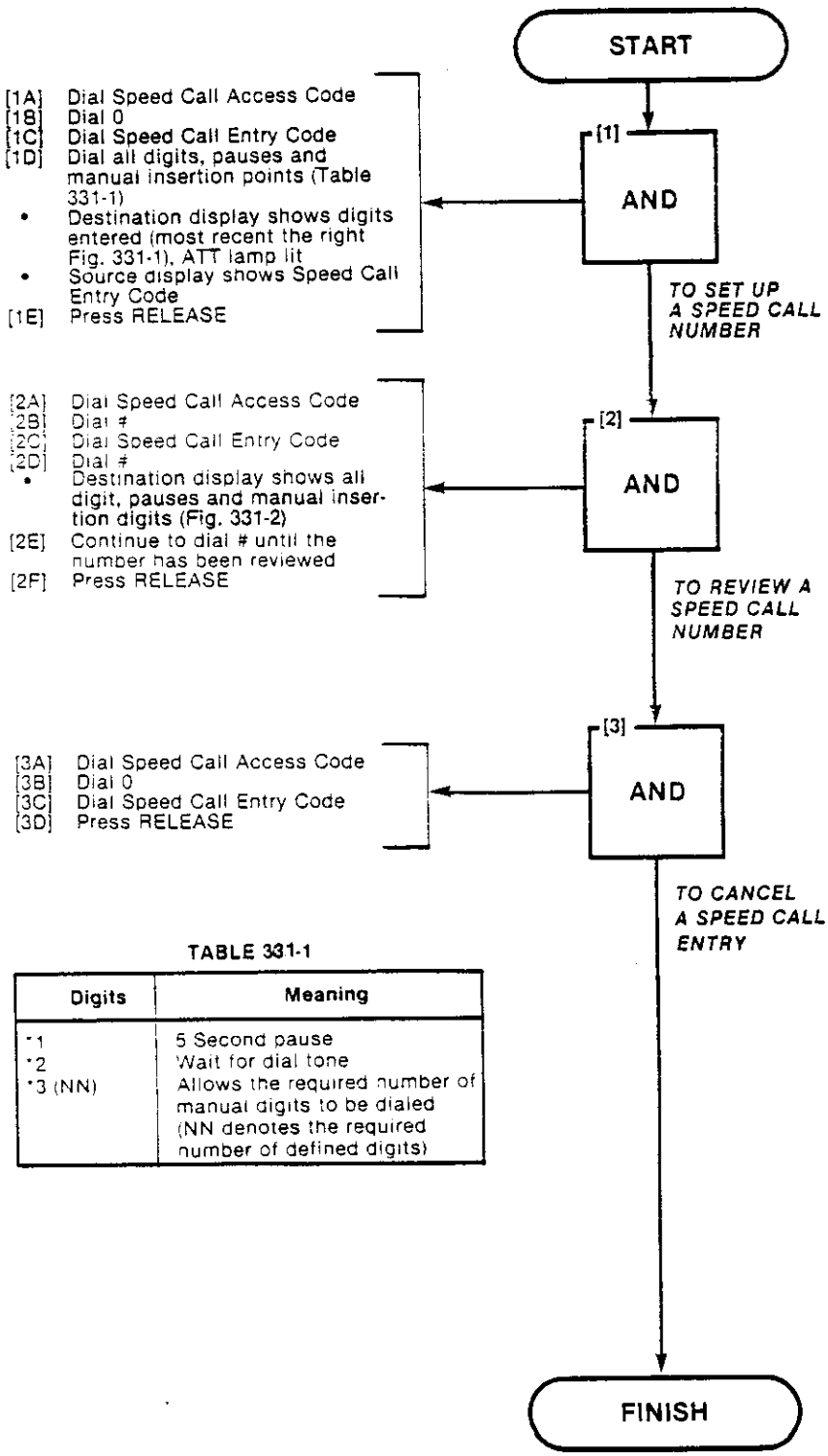

TABLE 331-1

Digits	Meaning
*1	5 Second pause
*2	Wait for dial tone
*3 (NN)	Allows the required number of manual digits to be dialed (NN denotes the required number of defined digits)

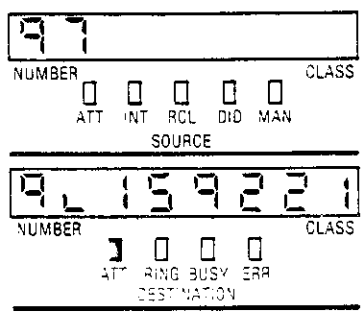

Fig. 331-1
Setup Speed Call Number

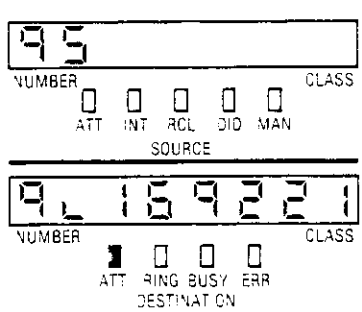

Fig. 331-2
Review Speed Call Number

CUSTOMER PROGRAMMING
MAP215-332
Issue 1, August 1981
Sheet 1 of 1

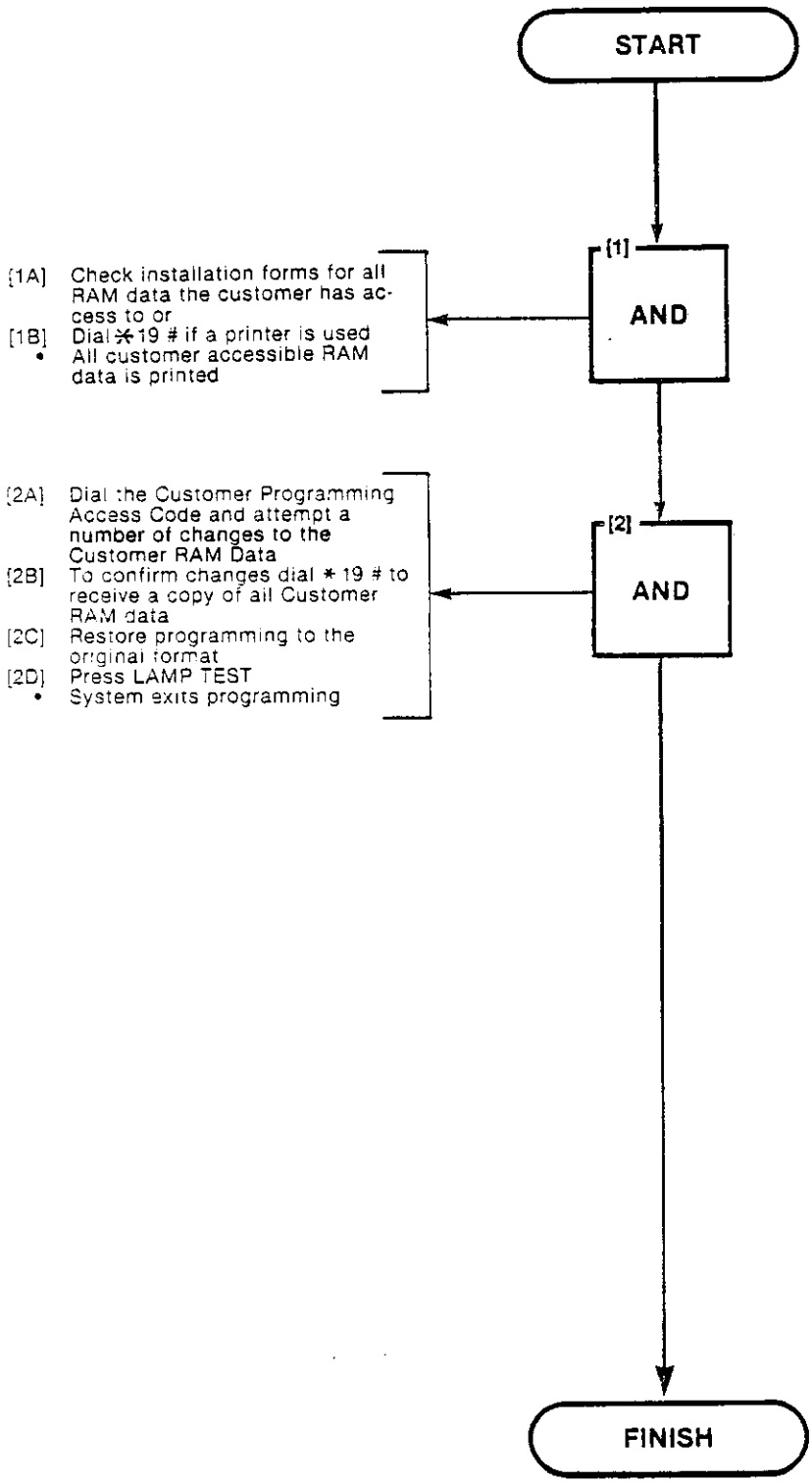

EXTERNAL CALL FORWARDING
MAP215-333
Issue 2, February 1982
Sheet 1 of 2

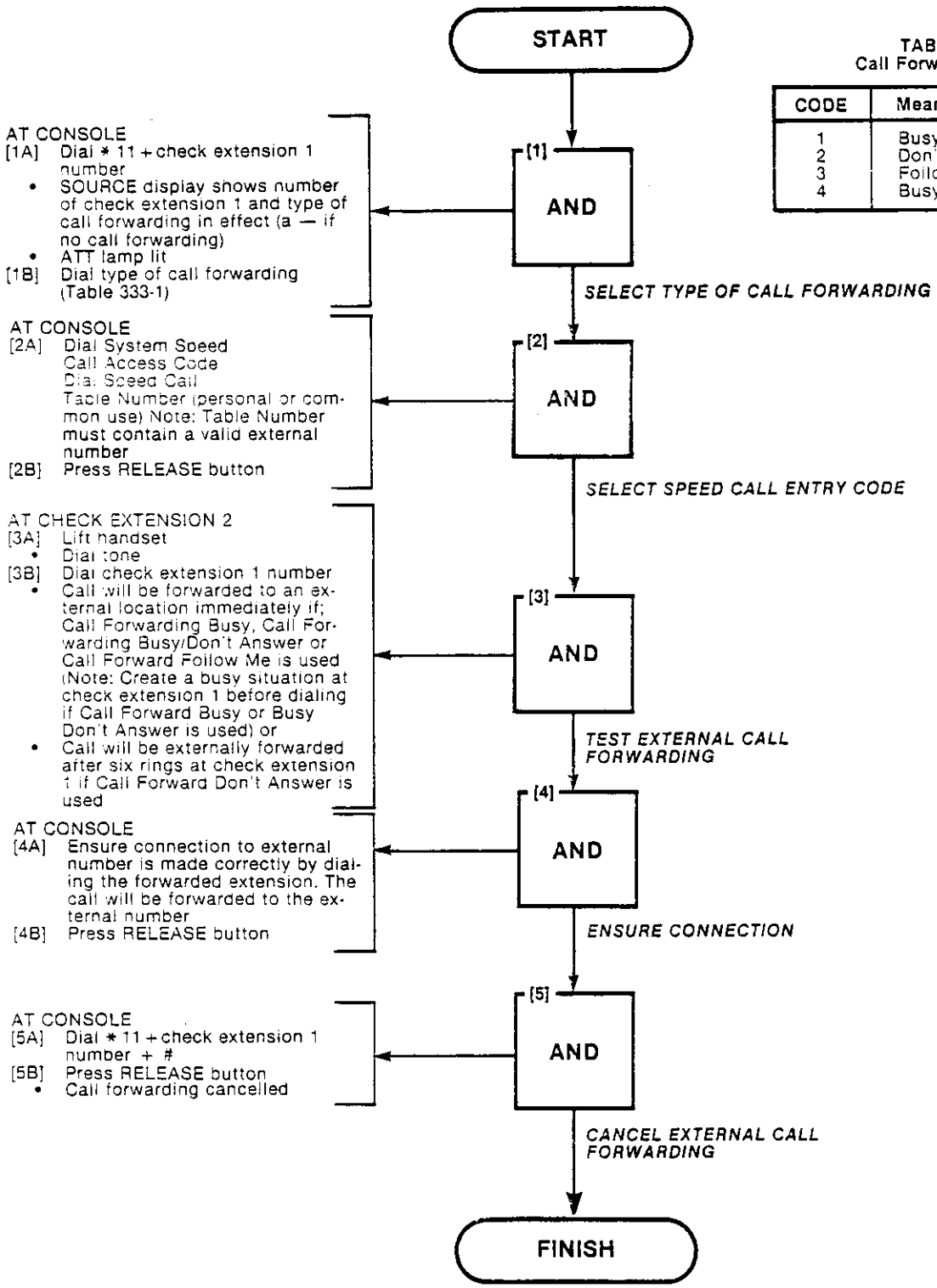

TABLE 333-1
Call Forwarding Codes

CODE	Meaning
1	Busy
2	Don't Answer
3	Follow Me
4	Busy/Don't Answer

TEST AUDIBLE TONE INDICATORS
MAP215-334
Issue 2, February 1982
Sheet 1 of 2

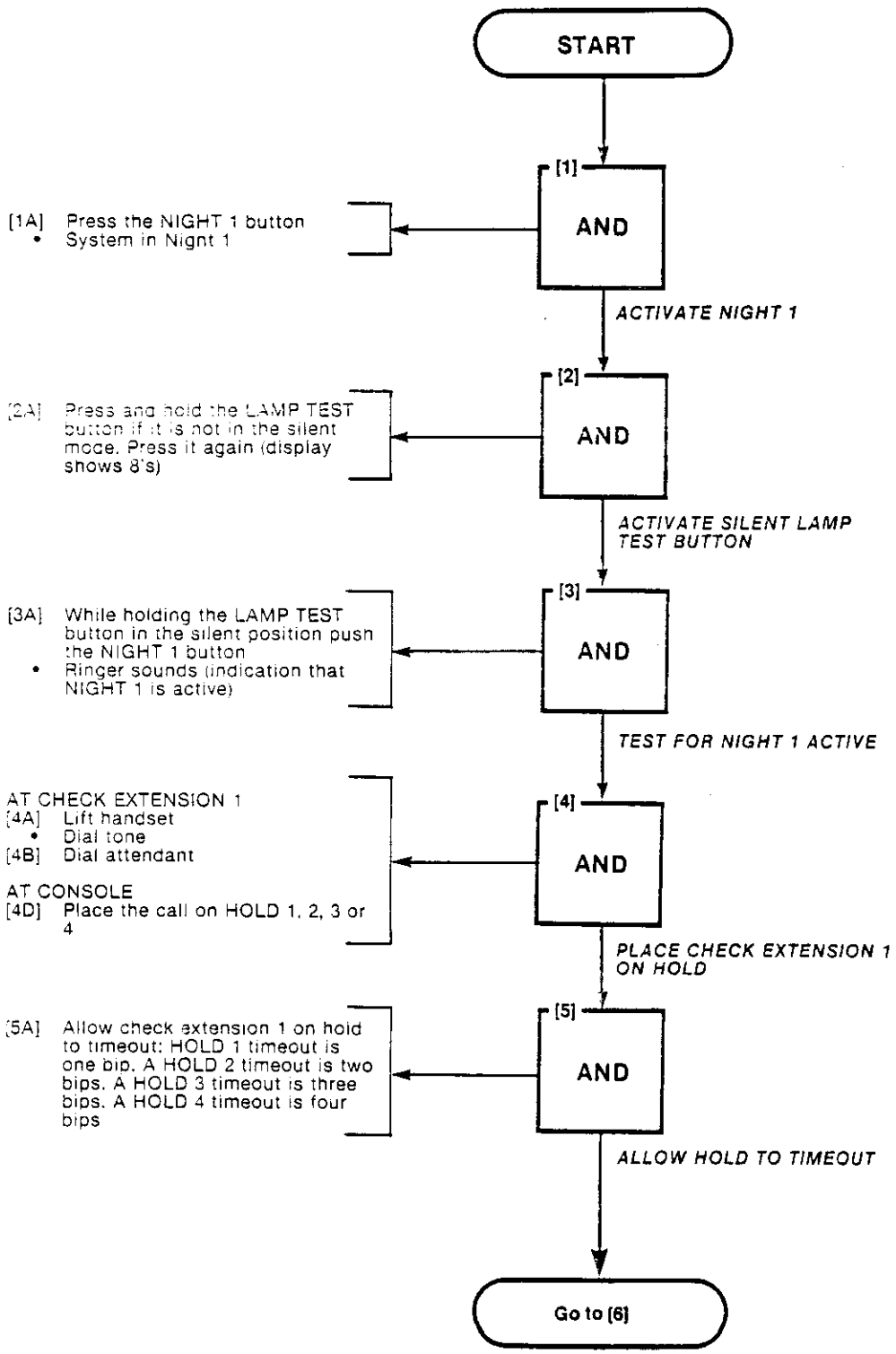

TEST AUDIBLE TONE INDICATORS
MAP215-334
Issue 2, February 1982
Sheet 2 of 2

From [5]

[6] AND

AT CONSOLE
[6A] Answer HOLD recall by pressing HOLD button flashing
[6B] Place call on a different hold button. Allow the hold to timeout again as per [5A]
[6C] Continue to answer recalls and place them on HOLD (1-4) until all HOLD buttons have been tried

ANSWER HOLD RECALL

[7] Have all Hold Buttons been recalled

NO → Return to [4]

YES

[8] AND

AT CHECK EXTENSION 1
[8A] Lift handset
• Dial tone
[8B] Stay off hook

LOCK CHECK EXTENSION 1 OUT

[9] AND

AT CONSOLE
[9A] After check extension 1 is off hook for 45 seconds an alarm will sound at the console as: one short ring followed by one longer ring repeated
[9B] Press the Alarm reset button
• Destination and source displays show lockout condition (Fig. 334-1)

CHECK AT CONSOLE FOR LOCKOUT

[10] AND

AT CONSOLE
[10A] Dial * 8 #
[10B] Press RELEASE
• Alarm cancelled
AT CHECK EXTENSION 1
[10C] Go on hook

CANCEL LOCKOUT ALARM

FINISH

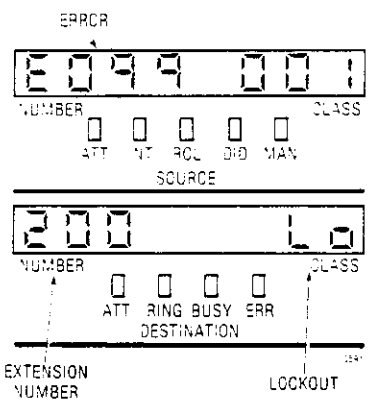

Fig. 334-1
Lockout Display

Note
System Option 112 must be enabled.

SINGLE DIGIT DIALING
MAP215-335
Issue 2, February 1982
Sheet 1 of 2

Note: **To conduct the following system tests, check extension 1 must be programmed as a "SERVICE" extension with code "n" (a single digit code). Alternatively check extension 1 may be temporarily connected in parallel on the cross-connect field to an extension which has a "SERVICE" code, for the test duration.**

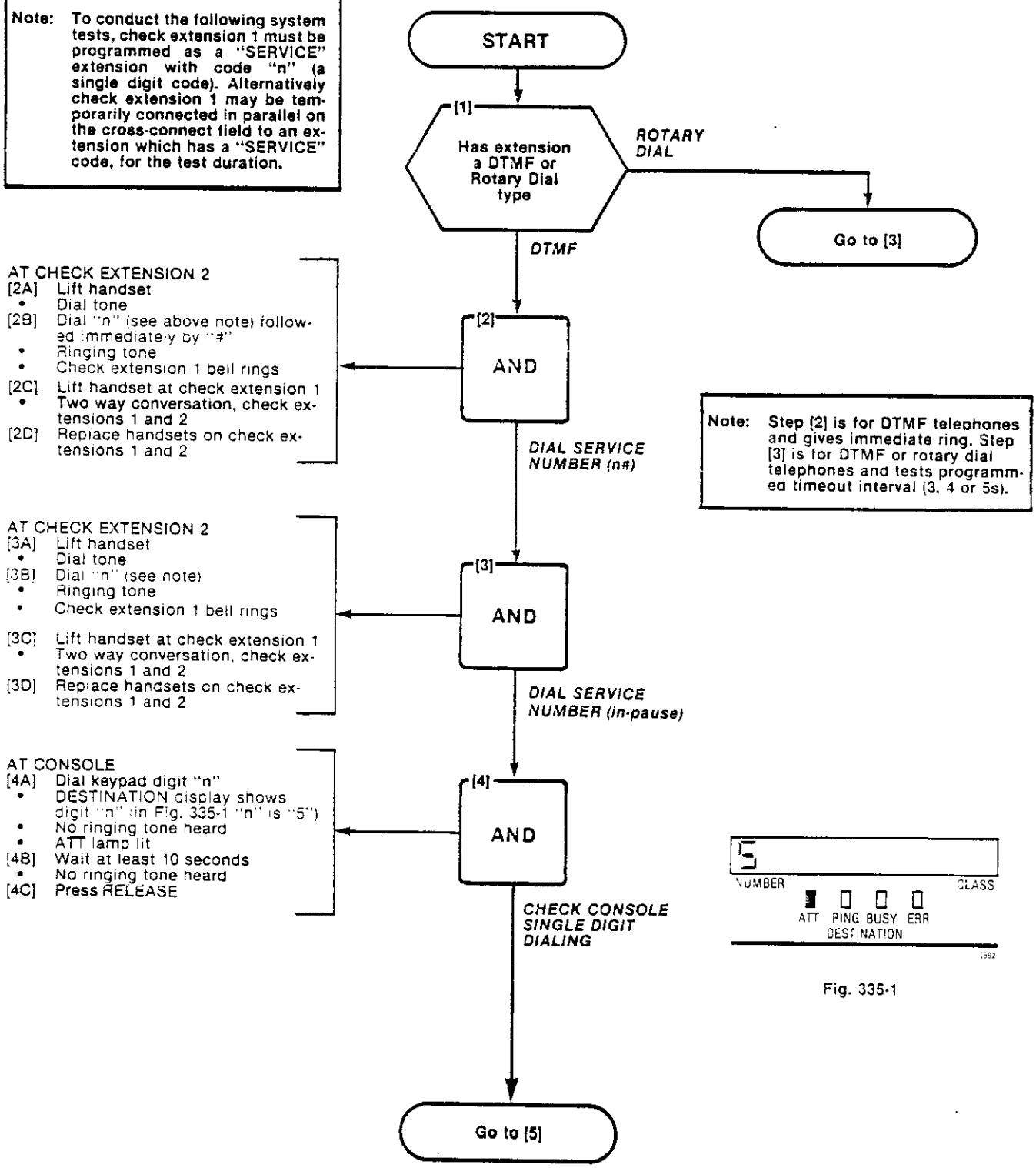

Fig. 335-1

SINGLE DIGIT DIALING
MAP215-335
Issue 2, February 1982
Sheet 2 of 2

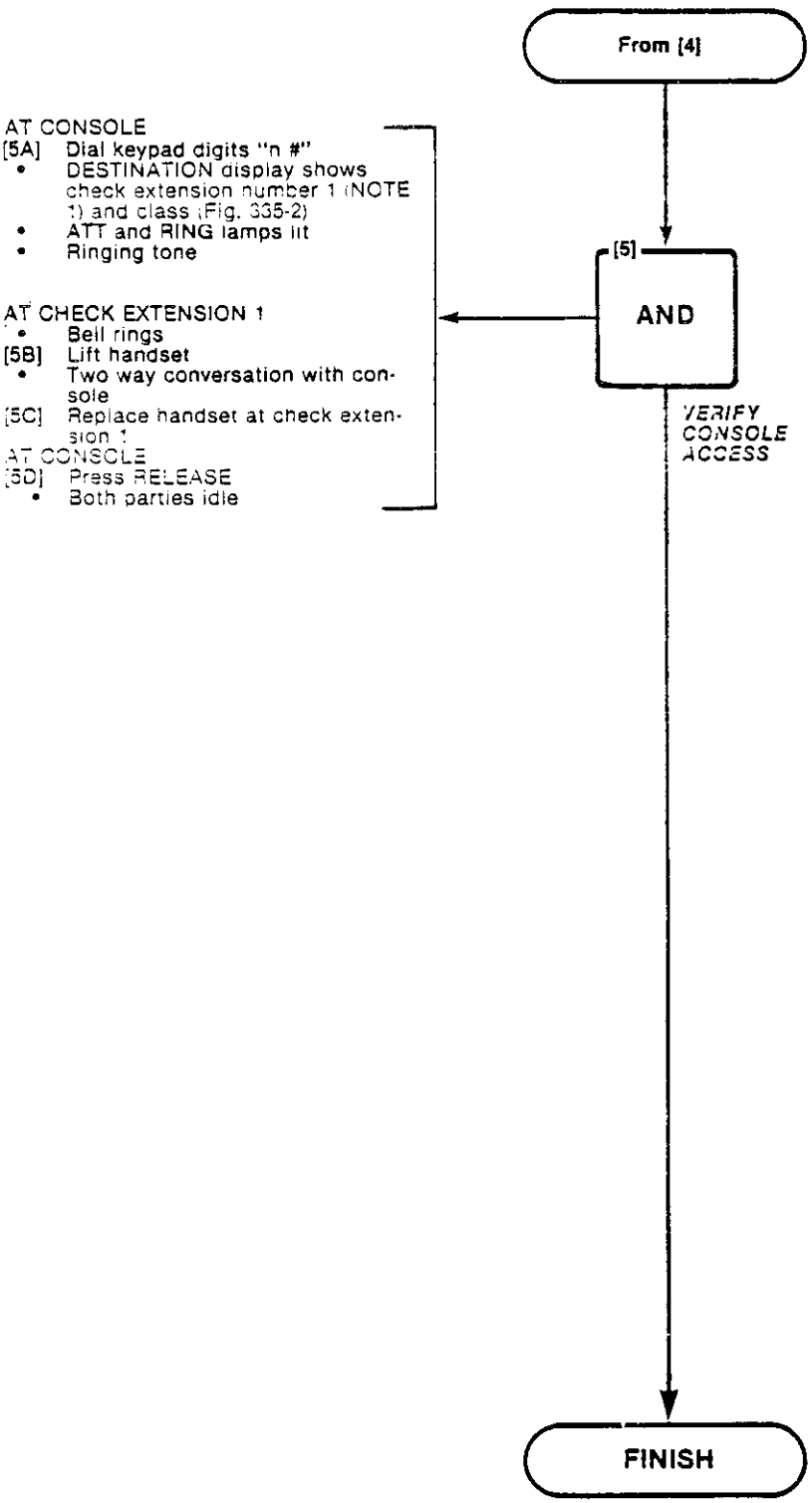

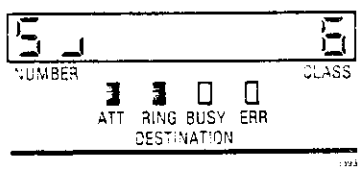

Fig. 335-2

COMMON ALERTING DEVICES
MAP215-336
Issue 2. February 1982
Sheet 1 of 1

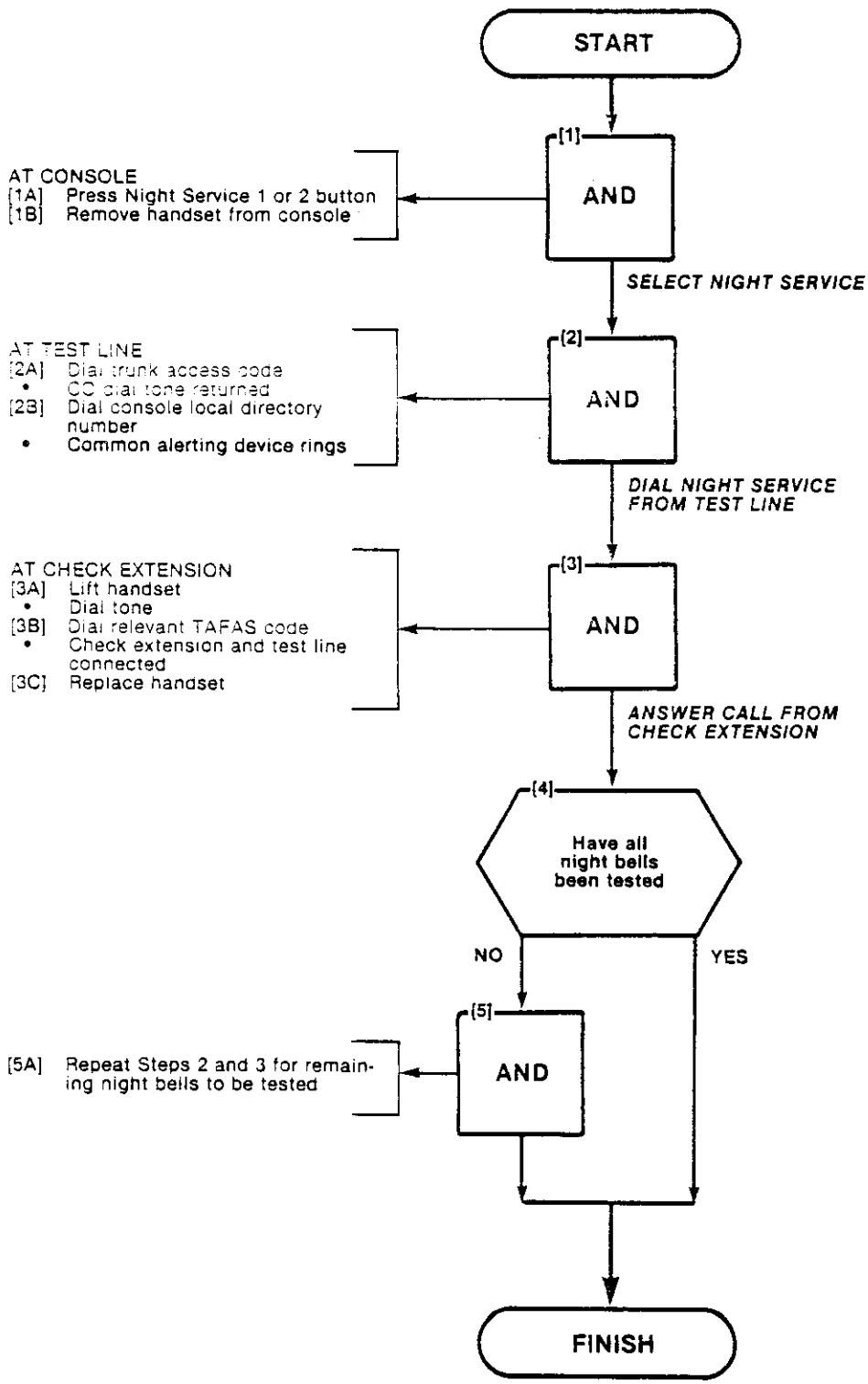

ANSWER DID TRUNK CALL
MAP215-337
Issue 2. February 1982
Sheet 1 of 2

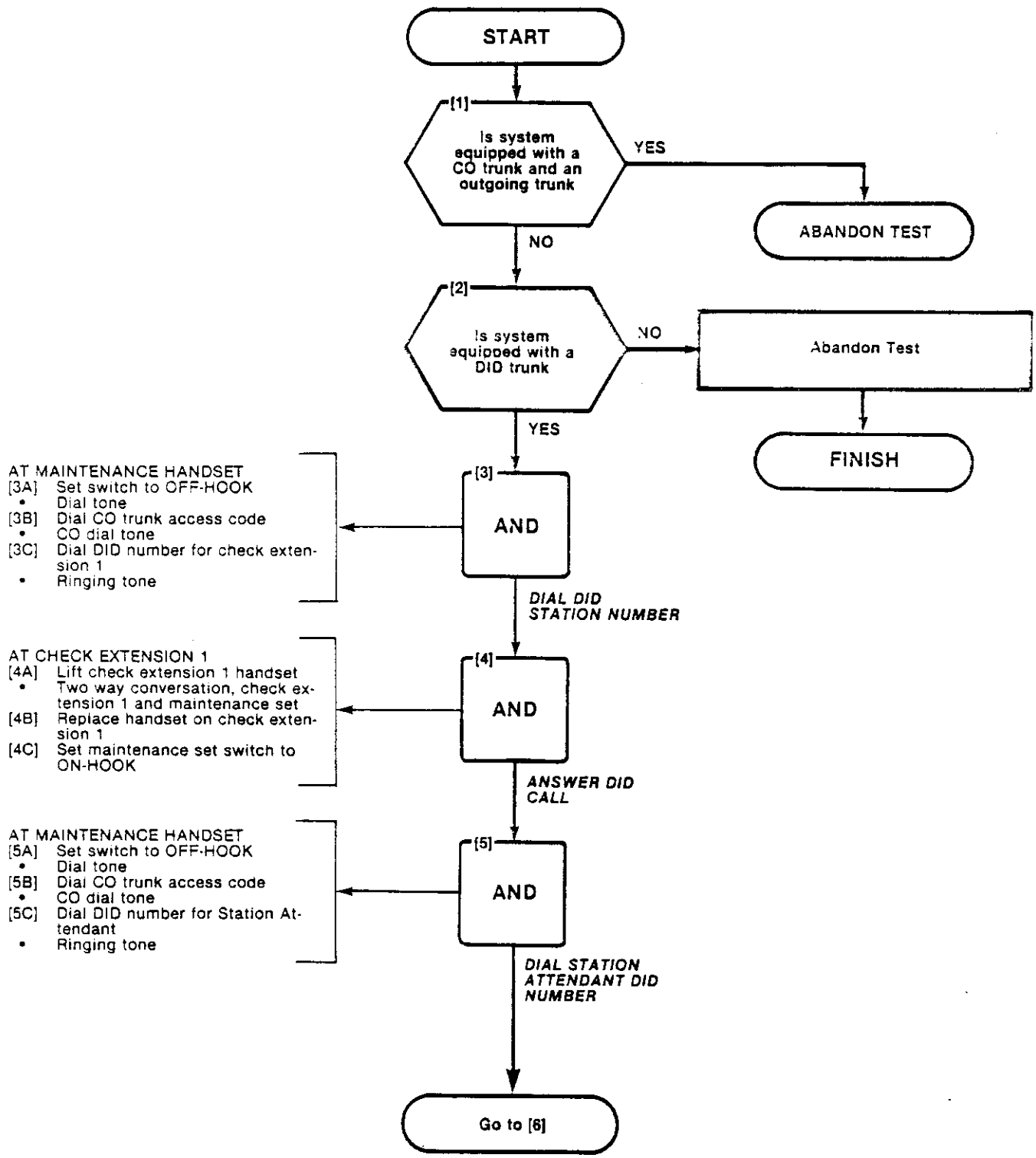

ANSWER DID TRUNK CALL
MAP215-337
Issue 2, February 1982
Sheet 2 of 2

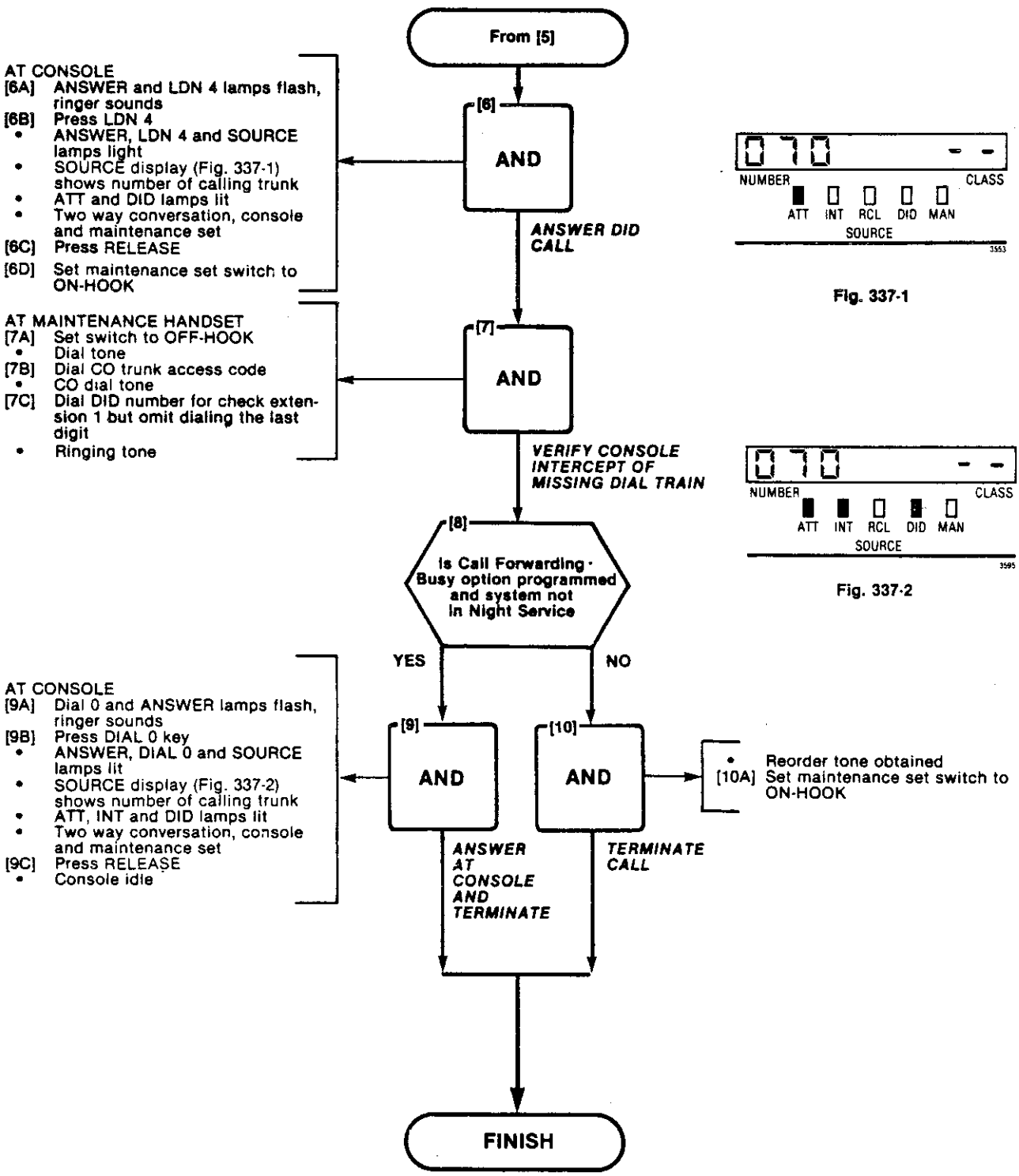

Fig. 337-1

Fig. 337-2

SX-100*/SX-200*
SUPERSWITCH*
ELECTRONIC PRIVATE AUTOMATIC BRANCH EXCHANGE
EXTENSION TEST PROCEDURES
GENERIC 216

CONTENTS PAGE

1. GENERAL 1
Reason for Reissue 1

2. TEST AND OPERATIONAL PROCEDURES 1
General 1
Operating Procedures 2

CHART 2-1 STATION-TO-STATION CALL 3
CHART 2-2 HUNT GROUP 4
CHART 2-3 BROKER'S CALL 5
CHART 2-4 CALL HOLD 6
CHART 2-5 CALL FORWARDING - BUSY . 8
CHART 2-6 CALL FORWARDING - DON'T ANSWER 9
CHART 2-7 CALL FORWARDING - FOLLOW ME 10
CHART 2-8 OVERRIDE 11
CHART 2-9 DIAL CALL PICKUP 12
CHART 2-10 CAMP-ON 13
CHART 2-11 AUTOMATIC CALLBACK - BUSY 14
CHART 2-12 DO NOT DISTURB 15
CHART 2-13 CALL PARK/PICKUP 16
CHART 2-14 PAGING 17
CHART 2-15 TRUNK ANSWER FROM ANY STATION 18
CHART 2-16 CONSULTATION HOLD/TRANSFER/ADD-ON . 19
CHART 2-17 AUTOMATIC WAKE-UP (ALARM) CALL 21
CHART 2-18 MEET-ME CONFERENCE . . . 22
CHART 2-19 AUTOMATIC CALLBACK - DON'T ANSWER 23
CHART 2-20 DIRECTED CALL PICKUP . . 24
CHART 2-21 STATION CONFERENCE . . . 25
CHART 2-22 SPEED CALL 26
CHART 2-23 SAVED NUMBER REDIAL . . 27
CHART 2-24 EXTERNAL CALL FORWARDING 28
CHART 2-25 CALL FORWARDING BUSY/DON'T ANSWER 29
CHART 2-26 HANDS-FREE 30
CHART 2-27 TRANSFER WITH PRIVACY . 31

1. GENERAL

1.01 This section describes the extension test procedures for the SX-100/SX-200 PABX's. These procedures should be performed as operational tests upon installation of extensions after the initial system installation. See SECTION MITL9105/9110-097-200-NA for system installation instructions.

Reason for Reissue

1.02 This practice has been reissued to include additional Generic 216 information requiring an extension test procedure.

2. TEST AND OPERATIONAL PROCEDURES

General

2.01 Satisfactory completion of the extension test procedures confirms that the apparatus has been installed and programmed correctly.

Copyright of MITEL Corporation 1981

*Trademark of MITEL Corporation 1981

2.02 If any operating procedure cannot be completed as described, verify that:

- The procedure is applicable to the extension (i.e. the feature being tested is assigned to the extension)
- The apparatus which provides the feature (e.g. music on hold) is correctly installed

Operating Procedures

2.03 Chart 2-1 should be performed on each extension. Charts 2-2 through 2-27 should be performed once per system.

CHART 2-1
STATION-TO-STATION CALL

STEP	ACTION	VERIFICATION
Called Station Idle:		
1	Lift handset	Dial tone returned
2	Dial any extension number	Dial tone removed after first digit; ringback tone heard after completion of dialing
3	Called extension answers	Ringback tone removed; two-way conversation
4	Called and calling extensions replace handsets	
Called Station Busy (Enable Callback Busy):		
5	Lift handset	Dial tone returned
6	Dial originating extensions number	Busy tone returned
7	Dial Callback code	Dial tone returned
8	Replace handset	
9	Busy extension goes on-hook	Original extension rings
10	Original extension answers	Ringback tone returned. Called extension rings
11	Called extension answers	Two-way conversation
Called Station Busy (Member of a Hunt Group):		
12	Lift handset	Dial tone returned
13	Dial Hunt Group access code	Dial tone removed after first digit; ringback tone heard; next free extension of group is rung
14	Free extension answers	Ringback tone removed; two-way conversation
15	Extensions replace handset	

CHART 2-2
HUNT GROUP

STEP	ACTION	VERIFICATION
First Station Idle (Terminal):		
1	Lift handset	Dial tone returned
2	Dial Hunt Group access code	Dial tone removed after first digit; ringback tone heard upon completion of dialing. First extension in group hears ringing
3	First extension answers	Ringback tone removed; two-way conversation
First Station Busy (Terminal):		
4	Repeat 1 and 2 above	Next idle extension in group hears ringing
5	Next idle extension answers	Ringback tone removed, two-way conversation
Hunt Groups (Circular):		
6	Repeat steps 1 and 2	Hunting starts at the extension after the last extension rung in the group. System will ring first idle extension in the hunt group, if no idle extension is found, busy tone is returned

CHART 2-3
BROKER'S CALL

STEP	ACTION	VERIFICATION
Extension in conversation wishes a private alternative conversation after flashing switchhook:		
1	Flash switchhook	Transfer dial tone returned
2	Extension dials number of third party	Third party phone rings
3	Third party answers	Extension and third party may now converse in private
4	Extension flashes switchhook	Extension returns to original (1st) party
5	Third party is on hold. Extension may alternate between conversations by flashing switchhook	The three parties CANNOT be joined together in one conversation

CHART 2-4
CALL HOLD

STEP	ACTION	VERIFICATION
To set up a CALL HOLD:		
1	Extension in conversation wishes to put call on hold, flashes switchhook	No tones or sound heard by extension on hold unless MOH is provided. Flashing extension receives transfer dial tone
2	Extension dials Call Hold code	Dial tone returned
3	Extension replaces handset	Extension is now free to make or receive calls
To retrieve the call at the original extension:		
4	Extension lifts handset	Dial tone returned
5	Extension dials Call Hold local retrieve code	Extension connected to call on hold
To retrieve a call at another extension:		
6	Extension lifts handset	Dial tone returned
7	Extension dials Call Hold Remote Retrieve code	No tones or sound heard
8	Extension dials Call Holding extension's number	Extension connected to call on hold
To use CALL HOLD as a Broker feature:		
9	Perform steps 1, 2 and 3 under "To set up a CALL HOLD"	
10	Extension lifts handset	Dial tone returned
11	Extension dials third party	Ringback tone heard, third extension's phone is ringing
12	Third party answers	Conversation takes place
13	Extension flashes switchhook	Transfer dial tone is returned
14	Extension dials Call Hold code	Third party is placed on hold, second party is retrieved

CHART 2-4 (CONT'D)
CALL HOLD

STEP	ACTION	VERIFICATION
15	Controlling extension may repeat steps 13 and 14 as often as required	Each repetition exchanges the party on hold with the one in the conversation
To join all three parties into one conversation:		
16	Extension flashes switchhook on second extension	Transfer dial tone returned
17	Extension dials Call Hold Retrieve code	Extension connected to third party
18	Extension flashes switchhook	Three parties in conversation

Note: A conference CANNOT be put on CALL HOLD.

CHART 2-5
CALL FORWARDING - BUSY

STEP	ACTION	VERIFICATION
To set up CALL FORWARDING - BUSY:		
1	Forwarding extension lifts handset	Dial tone returned
2	Extension dials Call Forwarding - Busy code, and number of extension to which calls are to be forwarded (calls may also be forwarded to the attendant)	Dial tone returned; forwarding successful
3	Extension replaces handset	
To test CALL FORWARDING - BUSY:		
4	At extension in 1-3 lift handset	Dial tone returned
5	At an alternate extension lift the handset	Dial tone returned
6	Dial extension with Call Forwarding - Busy in effect	Ringback tone returned extension that was forwarded to rings
7	Replace handset	
To cancel a CALL FORWARDING - BUSY:		
8	Extension lifts handset	Dial tone returned
9	Extension dials Call Forwarding - Busy code	No tones or sound heard
10	Extension replaces handset	Cancellation complete
To test cancellation:		
11	Repeat step 4	Busy tone returned
12	Replace handset	

CHART 2-6
CALL FORWARDING - DON'T ANSWER

STEP	ACTION	VERIFICATION
To set up CALL FORWARDING – DON'T ANSWER:		
1	Extension lifts handset	Dial tone returned
2	Extension dials Call Forwarding – Don't Answer code and number of extension to which calls are to be forwarded (calls may also be forwarded to the attendant)	Dial tone returned; forwarding successful
3	Extension replaces handset	
To test CALL FORWARDING – DON'T ANSWER:		
4	At an alternate extension lift the handset	Dial tone returned
5	Dial extension with Call Forwarding – Don't Answer in effect	Ringback tone returned. Do not answer the call after a time–out. The call will be transferred to the extension selected in 2
6	Replace handset	
To cancel CALL FORWARDING – DON'T ANSWER:		
7	Extension lifts handset	Dial tone returned
8	Extension dials Call Forwarding – Don't Answer code	No tones or sound heard.
9	Extension replaces handset	Cancellation complete
To test cancellation:		
10	Repeat steps 4 and 5	Extension dialled rings normally
11	Replace handset	

CHART 2-7
CALL FORWARDING - FOLLOW ME

STEP	ACTION	VERIFICATION
To set up CALL FORWARDING – FOLLOW ME:		
1	Extension lifts handset	Dial tone returned
2	Extension dials Call Forwarding – Follow Me code and number of extension to which calls are to be forwarded (calls may also be forwarded to the attendant)	Dial tone returned; forwarding successful
3	Extension replaces handset	
To test CALL FORWARDING – FOLLOW ME:		
4	At an alternate extension lift the handset	Dial tone returned
5	Dial the extension with Call Forwarding – Follow Me in effect	Ringback tone returned, extension that was forwarded to rings
6	Replace handset	
To cancel CALL FORWARDING – FOLLOW ME:		
7	Originating extension lifts handset	Dial tone returned
8	Originating extension dials Call Forwarding – Follow Me code	No tones or sound heard
9	Extension replaces handset	Cancellation complete

CHART 2-8
OVERRIDE

STEP	ACTION	VERIFICATION
1	Establish a two-party call	Talking connection
2	Extension lifts handset	Busy tone returned
3	Dial busy extension	Busy tone returned
4	Calling extension dials Override code	Parties in conversation hear a one second warning tone unless the COS of one or more of them prevents being overridden. After beep, calling extension is in conversation. All extensions will hear a short warning tone every six seconds

CHART 2-9
DIAL CALL PICKUP

STEP	ACTION	VERIFICATION
Any extension in the Pickup group is ringing:		
1	Idle extension lifts handset	Dial tone returned
2	Extension dials Dial Call Pickup code	Extension is connected to calling party

CHART 2-10
CAMP-ON

STEP	ACTION	VERIFICATION
1	Establish a two-party call	
2	Extension lifts handset	Dial tone returned
3	Dial busy extension	Busy tone returned
4	Calling extension remains off-hook for more than ten seconds	a) Calling extension after ten seconds receives a change in busy tone b) The dialed extension receives a short warning tone
5	Busy extensions hang up	Dialed extension is rung

CHART 2-11
AUTOMATIC CALLBACK - BUSY

STEP	ACTION	VERIFICATION
1	Extension lifts handset	Dial tone returned
2	Dial busy extension	Busy tone returned
3	Calling extension dials Automatic Callback – Busy code	Dial tone returned
4	Calling extension replaces handset	
5	Called extension replaces handset	a) Calling extension rings b) Called extension rings when calling extension answers c) Calling extension hears ringback tone d) two-way conversation

CHART 2-12
DO NOT DISTURB

STEP	ACTION	VERIFICATION
Extension sets up DO NOT DISTURB:		
1	Extension lifts handset	Dial tone returned
2	Extension dials Do Not Disturb code followed by 1	Dial tone returned
3	Extension replaces handset	
4	Extension is not called while in the Do Not Disturb mode	A calling extension receives reorder tone or attendant intercept
Extension cancels DO NOT DISTURB:		
5	Extension lifts handset	Dial tone returned
6	Extension dials Do Not Disturb code followed by 2	No tone or sound, Do Not Disturb is cancelled
7	Extension replaces handset	Calling extensions can ring the original extension

CHART 2-13
CALL PARK/PICKUP

STEP	ACTION	VERIFICATION
To park an established call:		
1	Flash switchhook	Transfer dial tone returned
2	Extension dials Call Park code	Dial tone returned to parking extension. No tones or sound heard unless music provided to parked extension
3	Extension replaces handset	
To pick up a parked call from the parking extension:		
4	Extension lifts handset	Extension connected to parked call
To pick up a parked call using an alternate extension:		
5	Lift handset of alternate extension	Dial tone returned
6	Alternate extension dials Call Park/Directed Call Pickup code and number of parking extension	Alternate extension connected to parked call

CHART 2-14
PAGING

STEP	ACTION	VERIFICATION
1	Extension lifts handset	Dial tone returned
2	Extension dials Paging zone code	Extension receives a short warning tone. Extension may now page
3	Extension replaces handset	
Repeat for each of the three codes if assigned.		

CHART 2-15
TRUNK ANSWER FROM ANY STATION

STEP	ACTION	VERIFICATION
To answer a TAFAS call:		
1	Extension user hears Night Bell	
2	Extension lifts handset	Dial tone returned
3	Extension dials TAFAS night code	Extension is connected to trunk call

CHART 2-16
CONSULTATION HOLD/TRANSFER/ADD-ON

STEP	ACTION	VERIFICATION
CONSULTATION HOLD:		
Established Call:		
1	Extension flashes switchhook	a) Flashing extension receives transfer dial tone b) Second extension in conversation is put on Hold, and hears music if provided
2	Extension which flashed, dials third extension	Third extension rings
3	Third extension is is answers	Effecting extension and third extension is connected. Second extension remains on Hold
TRANSFER:		
To idle extension:		
4	Perform steps 1 and 2 in Consultation Hold	Third extension rings
5	Extension effecting transfer replaces handset	Extension on Hold receives ringing tone, and is connected to third extension when it is answered
To busy extension:		
6	Perform steps 1 and 2 in Consultation Hold	Third extension busy, effecting extension receives busy tone
7	Extension effecting transfer replaces handset	Extension on Hold receives busy tone and is Camped-On busy line after 10 seconds
During consultation:		
8	Perform steps 1 to 3 in Consultation Hold	Effecting extension and third extension converse
9	Effecting extension hangs up	Extension on hold and third extension connected

CHART 2-16 (CONT'D)
CONSULTATION HOLD/TRANSFER/ADD-ON

STEP	ACTION	VERIFICATION
ADD-ON:		
10	Perform steps 1 to 3 in Consultation Hold	Effecting extension and third extension connected. Second extension remains on Hold
11	Effecting extension flashes switchhook	All three extensions connected
After three-way consultation:		
12	Perform steps 1 to 3 in Consultation Hold	Effecting extension and third extension converse
13	Effecting extension flashes switchhook	All extensions connected
14	Effecting extension replaces handset	Remaining extensions remain connected

CHART 2-17
AUTOMATIC WAKE-UP (ALARM CALL)

STEP	ACTION	VERIFICATION
Extension sets AUTOMATIC WAKE-UP (ALARM CALL):		
1	Extension lifts handset	Dial tone returned
2	Extension dials Automatic Wake-Up access code and Wake-Up time as a four-digit number (24-hour clock)	Dial tone returned
3	Extension replaces handset	
4	At selected time	Extension receives 6 rings every 5 minutes for a total of three attempts a) Extension receives no tone or receives MOH is provided
Extension cancels AUTOMATIC WAKE-UP (ALARM CALL):		
5	Extension lifts handset	Dial tone returned
6	Extension dials Automatic Wake-Up access code and 9999	Dial tone returned
7	Extension replaces handset	

CHART 2-18
MEET-ME CONFERENCE

STEP	ACTION	VERIFICATION
To set up a MEET-ME CONFERENCE:		
1	At at prearranged time dial Meet-Me Conference access code from up to seven extensions	First extension on hold. First extension hears warning tone as second extension is connected. Extensions in conference hear warning tone as succeeding extensions are connected

CHART 2-19
AUTOMATIC CALLBACK - DON'T ANSWER

STEP	ACTION	VERIFICATION
To set up AUTOMATIC CALLBACK – DON'T ANSWER:		
1	Extension lifts handset	Dial tone returned
2	Extension dials destination	Destination extension rings
3	Extension receives no answer, flashes switchhook	Dial tone returned
4	Extension dials Automatic Callback – Don't Answer code and number of extension called	Dial tone returned
5	Extension replaces handset	
6	Called extension uses extension	Extension goes busy for duration of call
7	Called extension replaces handset	Calling extension rings
8	Calling extension lifts handset	Called extension rings; calling extension hears ringback tone
9	Called extension answers	Conversation takes place

CHART 2-20
DIRECTED CALL PICKUP

STEP	ACTION	VERIFICATION
Any extension is ringing:		
1	Extension lifts handset	Dial tone returned
2	Extension dials Directed Call Pickup code, and the number of the extension being rung	Extension is connected to call

CHART 2-21
STATION CONFERENCE

STEP	ACTION	VERIFICATION
1	Extension lifts handset	Dial tone returned
2	Extension dials first conferee extension for Station Conference	Called party extension rings
3	Called extension answers Calling extension informs of conference, flashes switchhook and dials second conferee extension	a) Calling extension and called extension connected b) Called extension goes on hold. Calling extension receives transfer dial tone c) Second conferee extension rings
4	Second conferee answers	
5	Calling extension flashes switchhook	All extensions connected
6	Any extension may add up to a total of 7 extensions to the Station Conference by repeating steps 3 (b) & 3 (c)	

CHART 2-22
SPEED CALL

STEP	ACTION	VERIFICATION
Extension programs a SPEED CALL:		
1	Extension lifts handset	Dial tone returned
2	Extension dials Speed Call Access code	
3	Extension dials 0	
4	Extension dials Speed Call Entry Access code	
5	Extension dials Trunk Group Access code or ARS code	Note 1
6	Extension dials digits to be used as Speed Call Number	Note 1
7	Extension replaces handset	
To verify programmed number:		
8	Extension dials Speed Call Access code	
9	Extension dials Entry Access Number and manual digits if required	If the call is successful, ringback tone will be returned from the CO and the correct number will be rung

Note: *1 for 5 second pause or *2 for wait for dial tone or *3nn for user dialed digits may be entered at any time.

CHART 2-23
SAVED NUMBER REDIAL

STEP	ACTION	VERIFICATION
Extension programs a last number redial:		
1	After completion of dialing an outside number, the extension has 10 seconds to dial an *. This will store the dialed number in the last number redial	
To use SAVED NUMBER REDIAL:		
2	Extension goes off-hook	Dial tone returned
3	Extension dials Speed Call Feature Access code	
4	Extension dials Entry Access Number for saved number redial	Saved number dialed rings

CHART 2-24
EXTERNAL CALL FORWARDING

STEP	ACTION	VERIFICATION
Extension wishes to transfer all calls to an external number:		
1	Repeat steps 1-7 of CHART 2-22 (Note: It is possible to use manual digit insertion)	
2	Extension lifts handset	Dial tone returned
3	Extension dials the External Call Forwarding Access code	No tone returned
4	Extension dials Speed Call access code and Speed Call Entry access code from 1	Dial tone returned
To verify EXTERNAL CALL FORWARDING:		
5	From an alternate extension dial the External Call Forwarded extension	If the External Call Forwarding is successful, the external number will be rung

CHART 2-25
CALL FORWARDING BUSY/DON'T ANSWER

STEP	ACTION	VERIFICATION
Extension wishes to have CALL FORWARDING BUSY/DON'T ANSWER active at the same time:		
1	Extension lifts handset	Dial tone returned
2	Extension dials Call Forwarding Busy/Don't Answer code	No tones returned
3	Extension dials extension number to be forwarded to	Dial tone returned all calls will be forwarded
To test CALL BUSY/DON'T ANSWER:		
4	Repeat steps 4,5 and 6 of CHART 2-5 and 4 and 5 of CHART 2-6.	

CHART 2-26
HANDS-FREE

STEP	ACTION	VERIFICATION
Extension wishes to place itself in a HANDS-FREE state:		
1	Extension lifts handset	Dial tone returned
2	Extension dials Hands-Free access code or remains off-hook for 15 seconds	No tone returned, extension now in Hands-Free state
3	To remove extension from Hands-Free state, return handset to on-hook position	Extension will be rung normally

CHART 2-27
TRANSFER WITH PRIVACY

STEP	ACTION	VERIFICATION
An extension wishes to consult with two parties privately with the option of connecting them both together by going on-hook:		
1	Extension is conversing with first party	Normal conversation
2	Extension flashes the switchhook	Dial tone returned
3	Extension dials new extension number	Ringback tone returned, and extension converses privately when call is answered
4	Extension flashes switchhook returns to original party. Extension may alternate between parties privately by flashing the switchhook	Private conversation between original party and extension
5	Extension returns the handset to the on-hook position	Both parties may now converse