Installation

SBCS™

Purpose

This Technical Practice has been prepared for FGBS Employees who operate and maintain the equipment manufactured and sold by Fujitsu GTE Business Systems, Inc. The information in this Practice is subject to change and may not be suitable in all situations. Fujitsu GTE Business Systems, Inc. acknowledges that a customer's special requirements or practices may take precedence over those supplied in this Practice if a conflict develops during installation or ongoing operation. Fujitsu GTE Business Systems, Inc. hereby disclaims any responsibility or liability for any consequential or inconsequential damages that may result from the use of this practice.

This document is provided with the understanding that it shall not be copied or reproduced in whole or in part or disclosed to others without the prior written permission of Fujitsu GTE Business Systems, Inc.

Copyright ©1987 by FGBS, Inc.

SBCS™ is a trademark of Fujitsu GTE Business Systems, Inc.

SBCS™ FP A-D Technical Practices

This FGBS Practice is part of a series of Practices for the FGBS SBCS, Feature Packages A-D. The series includes the following:

TL-120001-1001	SBCS™ System Description/Features
TL-120101-1001	SBCS™ Installation
TL-120201-1001	SBCS™ Maintenance
TL-120301-1001	SBCS™ Data Base
TL-120401-1001	SBCS™ Site Log
TL-120501-1001	SBCS™ Index

USER RESPONSE/REQUEST FORM

Send To: Fujitsu GTE Business Systems
Publications Manager, Dept. 443
Clock Tower Corporate Centre
7776 Pointe Parkway West
Phoenix, Arizona 85044

Date Submitted: _____

- Document Number: TL-120101-1001
- Document Title: SBCS™ Installation
- Issue Number: 1 Date: July 1987

☐ General Comments. Enter Comments concerning overall organization, presentation, or content of this document in the space below.

☐ Suggested Revisions. Enter specific additions deletions or changes to this document in the space below, or provide a marked up copy of the original document.

Paragraph, Figure, or Table Number	Comment

- Revision Priority
  - ☐ 1: Service Affecting Problem
  - ☐ 2: Potentially Service Affecting Problem
  - ☐ 3: Administrative, Documentation, and Other Maintenance Problems
- Please attach a copy of your marked up pages.
- May we contact you concerning your comments? ☐ YES ☐ NO
- May we send you information on other available publications? ☐ YES ☐ NO
- Please enter your:

Name: _____
Title: _____
Company/Department: _____
Address: _____
Area Code/Tel. No./Ext.: _____

Thank you for your cooperation and comments.

FOLD OR TEAR HERE CAREFULLY. DOCUMENT WILL BE SCANNED BY OCR EQUIPMENT

FOLD HERE CAREFULLY. DOCUMENT WILL BE SCANNED BY OCR EQUIPMENT

NO POSTAGE NECESSARY IF MAILED IN THE UNITED STATES

BUSINESS REPLY MAIL

FIRST CLASS PERMIT NO. 216 TEMPE, AZ

POSTAGE WILL BE PAID BY ADDRESSEE

FUJITSU GTE BUSINESS SYSTEMS
PUBLICATIONS DEPARTMENT
2411 WEST 14TH STREET
TEMPE AZ 85281-9904

FOLD HERE CAREFULLY. DOCUMENT WILL BE SCANNED BY OCR EQUIPMENT

TABLE OF CONTENTS

PAGE	PARA-GRAPH	TOPIC
I-13	1.0	INTRODUCTION AND PRE-INSTALLATION INFORMATION
I-13	1.1	Intent and Scope
I-13	1.2	Using This Document
I-14	1.3	Reference Documents
I-14	1.4	Overview of the Switching System
I-19	1.4.1	Package A
I-19	1.4.2	Package B
I-20	1.4.3	Package C
I-20	1.4.4	Package D
I-20	1.5	Shipping of System Components
I-21	1.6	Handling and Unpacking System Components
I-22	1.7	Pre-Installation Information
I-22	1.7.1	Power Requirements
I-24	1.7.2	Environmental Conditions
I-24	1.7.3	Tool Requirements
I-25	2.0	INSTALLATION OF EQUIPMENT CABINET(S), POWER SUPPLY(S), CABLING, AND COMMON CONTROL CARDS
I-25	2.1	Installation of Equipment Cabinet and Power Supply for the Basic System
I-25	2.1.1	Unpacking and Inspecting Equipment
I-25	2.1.2	Mounting the Mounting Bracket
I-26	2.1.2.1	Drill Mounting Bolt Holes
I-26	2.1.2.2	Mount the Mounting Bracket
I-28	2.1.3	Mount the Equipment Cabinet
I-31	2.1.4	Mounting the Equipment Cabinet Power Supply Unit
I-31	2.1.5	Grounding the Basic System
I-34	2.1.6	Power Cabling for the Basic System
I-35	2.1.7	Battery Backup of the Basic System
I-36	2.2	Installation of Cabinets and Power Supply for the Expanded System
I-36	2.2.1	Expanded System Equipment List
I-37	2.2.2	Mounting the Expansion Cabinet Mounting Bracket
I-37	2.2.2.1	Drill Mounting Bolt Holes

TABLE OF CONTENTS

PAGE	PARA-GRAPH	TOPIC
I-37	2.2.2.2	Mount the Mounting Bracket
I-37	2.2.3	Mount the Expansion Cabinet
I-37	2.2.4	Mounting the Expansion Cabinet Power Supply Unit
I-37	2.2.5	Grounding the Expanded System
I-37	2.2.6	Power Cabling for the Expanded System
I-37	2.2.7	Battery Back-up of the Expanded System
I-39	2.3	CCG (Common Control Group) Installation for Basic System
I-39	2.3.1	Handling, Inserting, Seating /Unseating, and Removing Cards
I-39	2.3.1.1	Handling Cards
I-39	2.3.1.2	Inserting/Seating Cards
I-39	2.3.1.3	Unseating/Removing Cards
I-41	2.3.2	CPM Card Installation
I-42	2.3.3	MEM Card Installation
I-42	2.3.4	SWC Card Installation
I-44	2.4	CCG (Common Control Group) Installation for Expanded System
I-44	2.4.1	CPM and MEM Card Installation
I-44	2.4.2	SWB-A Card Installation
I-44	2.4.3	SWE Card Installation
I-47	3.0	DESCRIPTION OF SYSTEM CARDS, CARD PLACEMENT, AND CROSS-CONNECT WIRING
I-47	3.1	Description of Application-Specific Cards
I-48	3.1.1	Trunk Card Specification
I-49	3.1.2	Line Card Specification
I-50	3.1.3	Service Function Card Specification
I-50	3.2	Hierarchy of System Cards/Cables
I-52	3.3	Description of System Card/Slot Configuration and Card Placement
I-52	3.3.1	Basic Cabinet Card Configuration
I-54	3.3.2	Expansion Cabinet Card Configuration
I-56	3.4	System Cabling and Cross-Connect Wiring
I-56	3.4.1	Peripheral Installation Wiring
I-58	3.4.2	CDF Cable Assignment Overview

TABLE OF CONTENTS

PAGE	PARA-GRAPH	TOPIC
I-60	3.4.3	CDF Cross-Connect Assignment Overview
I-63	4.0	VOICE APPLICATION PERIPHERAL INSTALLATION
I-63	4.1	Voice Service Function Card Installation
I-63	4.1.1	RGEN Card Installation
I-64	4.1.2	RVAC Option Installation
I-65	4.1.3	Power Failure Transfer Card Installation
I-73	4.2	Line (Station) Voice Application Installation
I-74	4.2.1	8SLC Card Application
I-79	4.2.2	8EKC Card Applications
I-83	4.2.3	8DTC Card Applications
I-83	4.3	Trunk (Central Office) Side Voice Application Installation
I-84	4.3.1	4BWC Card Installation
I-90	4.3.2	2TTE Card
I-92	4.3.3	2TTL Card
I-92	4.4	Optional Voice Features Installation
I-92	4.4.1	Night Bell Installation
I-93	4.4.2	Music-On-Hold Installation
I-93	4.4.3	Music Source RVAC Card
I-93	4.4.4	External Paging Option
I-95	5.0	DATA INSTALLATION PERIPHERAL INSTALLATION
I-95	5.1	CSD Telephone Equipped with DTA (Data Terminal Adapter) Overview and Installation
I-95	5.1.1	CSD/DTA Installation
I-99	5.1.2	CSD with Terminal or Printer Installation
I-99	5.2	DIU Overview and Installation
I-101	5.2.1	DIU Installation
I-101	5.2.2	Associated EKT Installation
I-103	5.2.3	4CHT Installation
I-105	6.0	SYSTEM CONTROL COMPONENT INSTALLATION
I-107	6.1	Serial Communications Ports

TABLE OF CONTENTS

PAGE	PARA-GRAPH	TOPIC
I-107	6.2	PMP (Portable Maintenance Panel) Overview
I-109	6.2.1	PMP Installation
I-109	6.2.2	PMP Installation with Optional Disk Drive
I-112	6.2.3	Portable Maintenance Panel Operating Basics
I-114	6.3	Personal Computer Overview
I-114	6.3.1	Personal Computer Hardware Requirements
I-116	6.3.2	PcMP Installation
I-116	6.4	MCT Installation
I-117	7.0	SYSTEM HARDWARE AND DATA BASE INITIALIZATION
I-117	7.1	System Hardware Initialization
I-117	7.1.1	Powering Up the System
I-117	7.1.2	System Memory Backup
I-121	7.1.3	System Controls, Alarms, and Indicator
I-125	7.2	System Software Initialization and ODDB Load
I-125	7.2.1	System CPM/Software Initialization Overview
I-127	7.2.2	System CPM Software Initialization
I-127	7.2.3	Initializing the PMP Using Cassette Tape
I-129	7.2.4	Save PMP Operating Program to Tape
I-130	7.2.5	Save ODDB Using PMP Floppy Diskette Option
I-135	7.2.6	Checking PMP Port Configuration for Serial Communications Port or Modem Use
I-137	7.2.7	PMP Operational Overview
I-139	7.2.8	Remote PMP Operation
I-140	7.2.9	Using the PC to Load/Save the ODDB
I-140	7.2.10	Saving the ODDB Using the PC
I-140	7.2.11	Loading the ODDB Using the PC
I-140	7.2.12	Using the MCT (Master Control Telephone) for System Changes
I-140	7.2.13	CSD:MCT Operation
I-141	7.2.14	Attendant Console Used as an MCT
I-147	8.0	SYSTEM VERIFICATION AND VALIDATION
I-147	8.1	Installation Verificatio: Checklist

TABLE OF CONTENTS

PAGE	PARA-GRAPH	TOPIC
I-148	8.2	Initialization System Software
I-148	8.2.1	Power Supply Unit and CPM Controls and Indicators
I-151	8.3	System Verification Tests
I-151	8.3.1	Intra-system Features and Connection Verification
I-152	8.3.2	System Verification of Outgoing Trunks
I-152	8.3.3	System Verification of Incoming Trunks
I-153	8.3.4	System Verification of Options
I-153	8.4	Post-Installation Procedures
I-155	9.0	SMDR (STATION MESSAGE DETAIL RECORDING) OPTION
I-155	9.1	Printer, Cable, and System Communications Port Characteristics
I-155	9.1.1	Supportable Printer Characteristics
I-155	9.1.2	System Communications Port Characteristics
I-155	9.1.3	Printer Cable Requirements
I-155	9.2	SMDR Option Installation
I-156	9.2.1	SMDR Printer Installation
I-157	9.2.2	System Communications Port Configuration
I-157	9.2.3	Printer XON/XOFF Option
I-158	9.2.4	Printer Power ON/OFF Option
I-158	9.3	SMDR Operation
I-158	9.3.1	SMDR Message Format
I-159	9.3.2	Message Screening
I-160	9.3.3	Loading SMDR Printer Paper
I-163	10.0	HOTEL/MOTEL PRINTER OPTION
I-163	10.1	Printer, Cable, and DIU/DTA Port Characteristics
I-163	10.1.1	Supportable Printer Characteristics
I-163	10.1.2	DIU/DTA/Port Characteristics
I-166	10.1.3	Printer Cable Requirements
I-166	10.2	Hotel/Motel Printer Option Installation
I-166	10.2.1	System 4CHT Card Installation
I-166	10.2.2	Hotel/Motel Printer Installation
I-166	10.2.3	System Configuration of Hotel/Motel Printer Characteristics

TABLE OF CONTENTS

PAGE	PARA-GRAPH	TOPIC
I-167	10.3	Hotel/Motel Printer Option
I-167	10.3.1	Hotel/Motel Printer Output Format
I-170	10.3.2	Hotel/Motel Printer Screening
I-170	10.3.3	Loading Printer Paper
I-171		APPENDIX I, SECTION 1 CABLE PINOUT DIAGRAMS FOR EQUIPMENT CONNECTED TO THE DIU (DIGITAL INTERFACE UNIT)
I-174		APPENDIX I, SECTION 2 CABLE PINOUT DIAGRAMS FOR EQUIPMENT CONNECTED TO THE DTA (DATA TERMINAL ADAPTER)
I-176		APPENDIX I, SECTION 3 CABLE PINOUT DIAGRAMS FOR EQUIPMENT CONNECTED TO THE SERIAL COMMUNICATIONS INTERFACE
I-187		APPENDIX II, SYSTEM HARDWARE LIST AND PART NUMBERS
I-191		APPENDIX III, INSTALLATION NOTES FOR OPTIONAL VOICE APPLICATION FEATURES
I-192	AIII 1.0	PAGING UNITS
I-192	AIII 1.1	Valcom Installation Notes
I-194	AIII 1.2	Harris Installation Notes
I-200	AIII 1.3	Melco Installation Notes
I-202	AIII 1.4	Melco Installstion Notes
I-203	AIII 2.0	MUSIC-ON-HOLD
I-203	AIII 2.1	Harris Installation Notes
I-204	AIII 2.2	SAN/BAR Installation Notes
I-205	AIII 3.0	OPX (OFF-PREMISES EXTENSION) ADAPTERS
I-205	AIII 3.1	R-TEC Installation Notes

LIST OF FIGURES

PAGE	FIGURE NUMBER	TOPIC
I-16	1.1	System-Level Block Diagram
I-18	1.2	Typical Layout of an Expanded System
I-23	1.3	Minimum Service Area for Basic (Shown) and Expansion Cabinet
I-26	2.1	Preparation for Drilling Mounting Bolt Holes
I-27	2.2	Mounting Bracket
I-29	2.3	Lowering the Equipment Cabinet onto the Mounting Bracket
I-30	2.4	Bolting the Equipment Cabinet to the Mounting Bracket
I-32	2.5	Ground Cable Connection
I-33	2.6	Ground Wire Terminals
I-34	2.7	Cable and Cable Connectors for Equipment Cabinet Power Supply
I-35	2.8	Location of Power Supply Receptacle
I-38	2.9	Expanded System Ground and Power Cable Connections
I-40	2.10	Common Control Card Guide Pin
I-43	2.11	Placement of CCG (Common Control Group) Cards
I-45	2.12	Inter-Module Cable Arrangement - Expanded System
I-46	2.13	Inter-Module Cable
I-51	3.1	Hierarchy of System Card Groups, Cards, and Cables
I-53	3.2	Basic Cabinet Card Configuration
I-54	3.3	Expansion Cabinet Card Configuration
I-57	3.4	Peripheral Installation Wiring
I-59	3.5	Relationship of Card Slots and Circuits to Cables and Connector Pins
I-61	3.6	Cross Connection for Lines/Trunks
I-62	3.7	Cross Connection for Type I and Type II Signalling
I-65	4.1	Message Waiting Option on the RGEN
I-68	4.2	EXP/BASIC Switch on 6PFE Card
I-69	4.3	CDF Terminal Block Connection for 6PFT/6PFE Card
I-70	4.4	Typical Cross Connection for 6PFT/6PFE (Basic System)
I-72	4.5	Optional Cross Connection for 6PFE Cards Between the Basic and Expansion Cabinet
I-75	4.6	Typical CDF Terminal Block Connection for Line Card

LIST OF FIGURES

PAGE	FIGURE NUMBER	TOPIC
I-76	4.7	Example of CN, CDF to Modular Jack Connection
I-81	4.8	Proprietary EKT Telephone Wall Mounting
I-82	4.9	Example CN, CDF to Modular Jack Connection
I-83	4.10	Attendant Console Cross Connections
I-85	4.11	Typical CDF Terminal Block Connection for 4BWC Card
I-91	4.12	Typical CDF Terminal Block Connection for 2TTE Card
I-97	5.1	Typical CSD with DTA Application Configuration
I-98	5.2	DTA Installation in CSD
I-100	5.3	Typical DIU Configuration
I-101	5.4	DIU Line-Side Wiring
I-102	5.5	Wiring Diagram for Wiring EKT and DIU Using a Single Modular Jack and Cable
I-106	6.1	Typical Remote Maintenance Center Connections
I-108	6.2	PMP (Portable Maintenance Panel) - Epson HX-20 Hand-Held Computer
I-110	6.3	Bottom of PMP
I-111	6.4	PMP Connection to Equipment Cabinet
I-112	6.5	PMP Keyboard Layout
I-118	7.1	Power Supply Indicator
I-119	7.2	Power Supply Protection Range for AC Power Interruption Duration of Interrupt (ms) by Number of Lines per CCS (Hundred Call Seconds)
I-120	7.3	Location of Battery Box
I-123	7.4	Restart Controls and Visual Indicators on the CPM CArd
I-124	7.5	Local/Remote Alarm Functional Block Diagram
I-133	7.6	Loading the Disk Drive
I-134	7.7	Disk Drive with Diskette Loaded
I-135	7.8	Floppy Diskette Ejection
I-142	7.9	Key Assignment for a CSD in MCT Mode
I-144	7.10	Key Assignments for an Attendant Console in MCT Mode
I-165	10.1	Example Hotel/Motel Printer Configuration

LIST OF FIGURES

PAGE	FIGURE NUMBER	TOPIC
I-172	AI-1.1	Generic Cable Pinout for a DTE Type Terminal Connected to a DIU
I-173	AI-1.2	Cable Pinout for a Hotel/Motel Printer Connected to a DIU
I-175	AI-2.1	Generic Cable Pinout for a DTE Type Terminal Connected to a DTA
I-177	AI-3.1	Specific Cable Pinout for PMP Connected to the Serial Communications Port
I-178	AI-3.2	Special Cable Pinout for IBM PC-to-Serial Port Interface
I-179	AI-3.3	Cable Pinout for DCE Type Modem Connected to the IBM PC for Use as a Remote Maintenance Device
I-180	AI-3.4	Cable Pinout for DTE Type SMDR Printer with RTS Connected to the Serial Communications Port
I-181	AI-3.5	Cable Pinout for DTE Type SMDR Connected to the Serial Communications Port
I-183	AI-3.6	Specific Cable Pinout for Telematic Printer Used as an SMDR Printer
I-184	AI-3.7	Specific Cable Pinout for 3M Printer Used as an SMDR Printer
I-185	AI-3.8	Specific Cable Pinout for Oki Data Printer Used as an SMDR Printer
I-186	AI-3.9	Specific Cable Pinout for Silent 700 Printer Used as an SMDR Printer

THIS PAGE IS INTENTIONALLY LEFT BLANK.

LIST OF TABLES

PAGE	TABLE NUMBER	TOPIC
I-17	1.1	Abbreviations
I-41	2.1	Hardware Compatibility
I-48	3.1	Trunk Card Specifications
I-49	3.2	Line Card Specifications
I-50	3.3	Service Function Card Specifications
I-52	3.4	Maximum Number of Cards Installed in the Cabinet(s)
I-55	3.5	Basic Cabinet Card Configuration Matrix
I-55	3.6	Expansion Cabinet Card Configuration Matrix
I-66	4.1	Event/Result Table for 6PFE
I-71	4.2	CN 12 Power Failure Transfer Cross-Connect Data for Loop Trunk
I-77	4.3	CN 0, 2, 4, 6, and 8 Cross-Connect Data for Line Circuits
I-78	4.4	CN 1, 3, 5, 7, and 9 Cross-Connect Data for Line Circuits
I-86	4.5	CN 4, 6, and 8 Cross-Connect Data for 2-Wire E&M Trunks and Loop Trunks
I-87	4.6	CN 5, 7, and 9 Cross-Connect Data for 2-Wire E&M Trunks and Loop Trunks
I-88	4.7	CN 10 Cross-Connect Data for 2-Wire E&M Trunks and Loop Trunks (Basic and Expanded)
I-89	4.8	CN 11 Cross-Connect Data for 2-Wire E&M Trunks, Loop Trunks, and 6PFT/6PFE Cards (Basic and Expanded)
I-113	6.1	PMP Program Function Key Definitions
I-126	7.1	Alarm States After Restart
I-143	7.2	CSD/MCT Function Keys
I-145	7.3	Attendant Console/MCT Function Keys
I-149	8.1	Controls and Indicators on the Power Supply Unit
I-149	8.2	Controls and Indicators on the CPM card
I-156	9.1	Serial Communications Port Characteristics
I-164	10.1	Hotel/Motel Printer Requirements

LIST OF TABLES

PAGE	TABLE NUMBER	TOPIC
I-168	10.2	Hotel/Motel Printer Output Format (80 Column)
I-170	10.3	Hotel/Motel Screening Capabilities
I-195	AIII.1	J1 OPTION BLOCK TERMINALS PagePac VS
I-197	AIII.2	J1 OPTION BLOCK TERMINALS on PagePac VS
I-197	AIII.3	J3 OPTION BLOCK TERMINALS on UIC
I-198	AIII.4	J1 OPTION BLOCK TERMINALS
I-198	AIII.5	J3 OPTION BLOCK TERMINALS on UIC
I-198	AIII.6	J103 OPTION PINS Jumper Control Release Time

INTRODUCTION AND PRE-INSTALLATION INFORMATION

1.0 This document, TL-120101-1001 SBCS™ Installation, is a Fujitsu GTE Business Systems' Technical Practice which covers installation material for the Fujitsu GTE Business Systems' SBCS™ (Small Business Communication System). This practice is part of a complementary series of technical practices which include the following:

Technical Practice TL-120201-1001	SBCS™ Maintenance
Technical Practice TL-120001-1001	SBCS™ System Description/Features
Technical Practice TL-120301-1001	SBCS™ Data Base
Technical Practice TL-120401-1001	SBCS™ Site Log

Intent and Scope

1.1 This technical practice serves as the installation document for SBCS™ Feature Packages A through D. It is a task-oriented hardware installation and software initialization manual which references other technical practices in this series for system/feature descriptions, software programming, and maintenance practices. This document assumes that the user is familiar with the operating principles of telecommunications systems and possesses the skills required for installing, configuring, and validating those systems.

Using This Document

1.2 This document is composed of 10 sections which follow the sequential order of a typical system installation. The exceptions to the sequential order of installation are Section 9 - Station Message Detail Recording Option Installation, and Section 10 - Hotel/Motel Option Installation. It should be noted that these are options and are not applicable to a typical installation; for that reason, they appear out of sequence. If the subject installation includes one of these options, the installer is advised to refer to this material first, noting how the installation steps for these options will affect the typical installation sequence. This document is organized as follows:

Section 1.0 Introductory material, installation practices, and pre-installation information.

Section 2.0 Installation information on components common to all installations: equipment cabinet, power supply, and common control cards.

Section 3.0 Installation information on components common to all system configurations. Covers possible card configurations and system cross-connect wiring.

Section 4.0 Installation information on voice applications and peripherals.

Section 5.0 Installation information on data communication applications and peripherals.

Section 6.0 Installation information on system control components used for initializing and configuring the system.

Section 7.0 Information for the initial software load of the system with reference to data base-related documents.

Sections 8.0 and 9.0 Installation information on the Station Message Detail Recording and Hotel/Motel Options. If the subject installation includes these option(s), these sections should be referenced first.

Section 10.0 Information necessary to validate the installation.

Appendix I RS-232C Cable Pin Configurations
Appendix II System Hardware List and Part Numbers
Appendix III Installation Notes for Optional Voice Application Features

Reference Documents

1.3 The following industry standards/documents are referenced in this document:

- FCC Rules and Regulations, part 68 and part 15 - Class A
- EIA Standard RS-232C Interface Between Data Terminal Equipment and Data Communications Equipment Employing Serial Binary Data Interchange
- EIA RS-464 "Private Branch Exchange Switching Equipment for Voiceband Applications" 12-79
- EIA RS-464-1 "PBX Switching Equipment for Voiceband Applications, Addendum, Number 1" 8-8
- EIA PN-1429 "Proposal Addition" to RS-464 9-83
- EIA RS-478 "Multi-Line Key Telephone Systems (KTS) for Voiceband Applications" 7-81

Overview of the System

1.4 The system is a hybrid electronic key telephone/private automatic branch exchange designed for businesses requiring from 20 to 240 telephone lines. The system integrates voice and data applications through software-controlled state-of-the-art digital switching technology. The system is installed on customer premises (using standard 120 VAC power). It can be configured as a basic system handling up to 120 lines or as an expanded system handling up to 240 lines.

The primary component of the system is a wall-mounted equipment cabinet which measures 34 inches wide, 16 inches high, and 14.6 inches deep. This equipment cabinet houses all hardware including the power supply, common control cards, and battery back-up, which providing two weeks of data base protection in the event of a system power outage. The equipment cabinet has card slots which may contain specific voice or data interfaces depending on the installation configuration. Figure 1.1 is a system functional block diagram of peripherals and cards. Table 1.1 introduces abbreviations used in Figure 1.1 and throughout this document. The basic system consists of one equipment cabinet called the basic cabinet, and the expanded system, shown in Figure 1.2, consists of an additional equipment cabinet called the expansion cabinets.

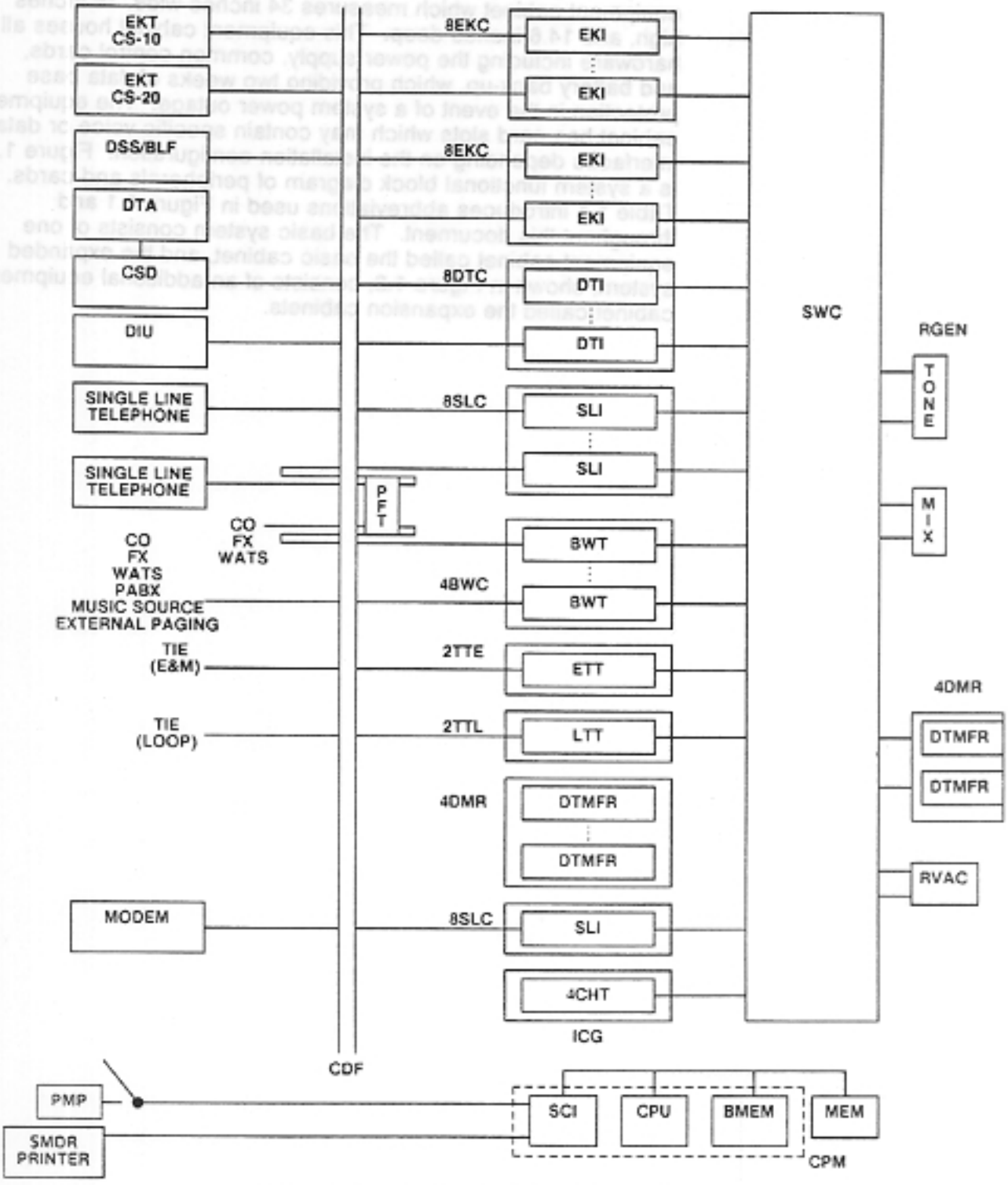

Figure 1.1 System-Level Block Diagram

Table 1.1 Abbreviations

ABBREVIATION	DESCRIPTION
BMEM	Basic Memory
4BWC	Central Office Bothway Trunk card
CDF	Combined Distribution Frame
4CHT	Character Trunk card
CO	Central Office Line
CPM	Central Processing Unit and Memory card
DIU	Data Interface Unit
4DMR	Dual Tone Multi-Frequency Receiver card
DTA	Data Terminal Adapter
DTI	Digital Telephone Interface
8DTC	Proprietary Digital Telephone card
DTMFR	DTMF Receiver
DSS/BLF	Direct Station Selection/Busy Lamp Field Console
8EKC	Electronic Key Telephone card
EKI	Proprietary Electronic Key Telephone Circuit
EKT	Proprietary Electronic Key Telephone
FX	Foreign Exchange Line
ICG	Interface Card Group
MEM	Memory card
MIX	Mixing Circuit
MODEM	Modulator/Demodulator
PABX	Private Automatic Branch Exchange
6PFE	Power Failure Transfer (Expanded) card
6PFT	Power Failure Transfer card
PMP	Portable Maintenance Panel
RGEN	Ring Generator
SCI	Serial Communication Interface
8SLC	Single-Line Telephone card
SLT	Single-Line Telephone
SMDR PRTR	Station Message Detail Recording Printer
SWC	Switch Control card
TIE	Tie Line
TONE	Tone Generator
2TTE	E&M Tie Trunk card
2TTL	Loop Dial Tie Trunk card
RVAC	Recorded Voice Announcement card
WATS	Wide Area Telephone Service Line
DID	Direct Inward Dialing trunks

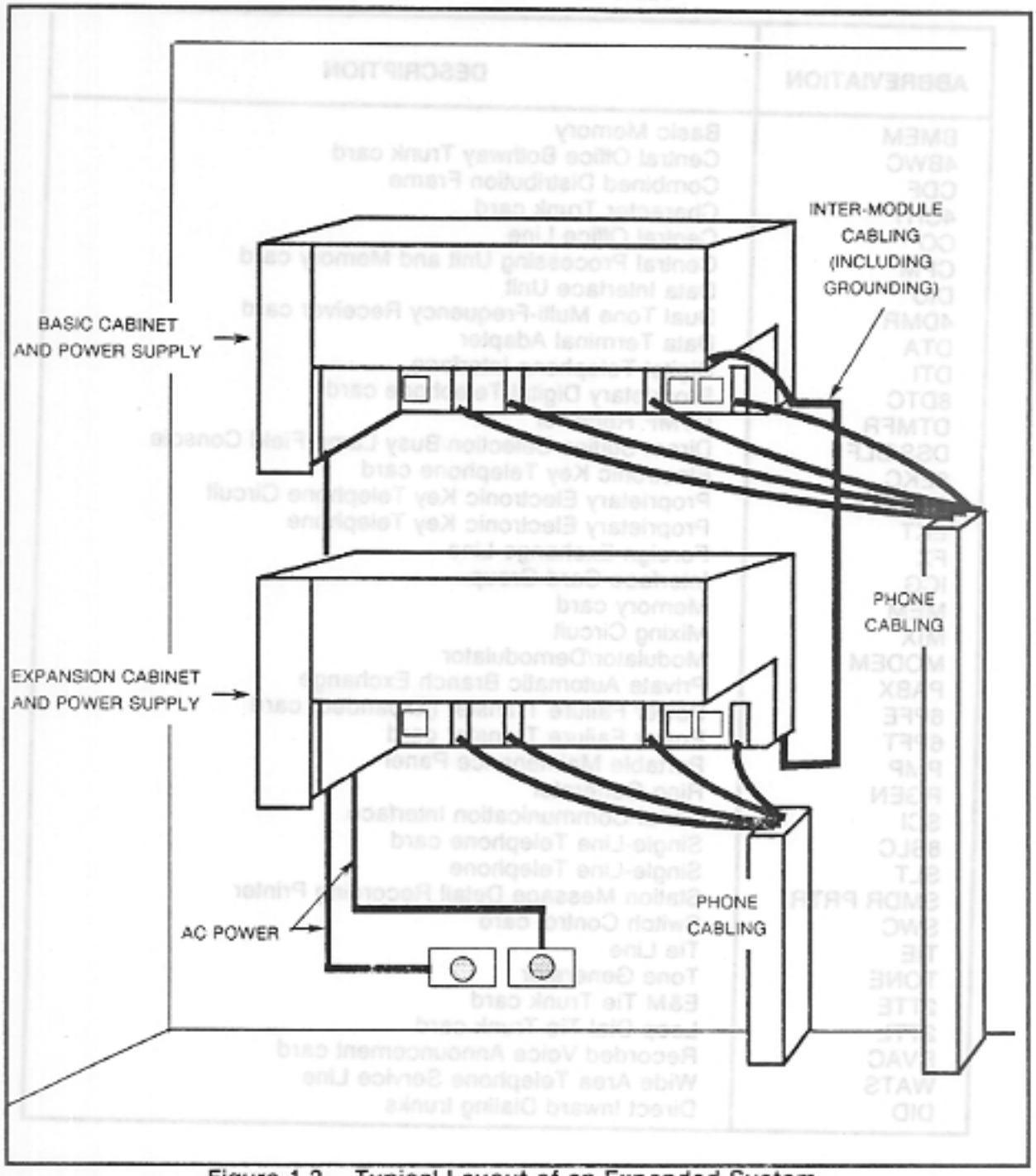

Figure 1.2 Typical Layout of an Expanded System

The system supports a wide range of user peripherals including analog/digital station sets, analog/digital key sets, Attendant Consoles, data terminals, modems, etc. The system also supports a wide range of standard interconnections to private or public telecommunications networks. Cross-interconnection between peripherals and telecommunications networks is implemented via a CDF (Combined Distribution Frame).

The system is software-controlled and can be programmed to accommodate various features and configurations. The software includes an extensive diagnostic program which aids in troubleshooting the system. System features are categorized and updated through feature packages. This document covers Packages A, B, C, and D. A list of package features is as follows.

Package A

1.4.1 Package A includes the following features and capabilities:

- Reliable and efficient voice communications service
- Latest design and technology for integrating key and PABX systems
  - completely digital hybrid PABX system
  - multi-line electronic instrument support
  - single-line telephone support
- Full voice communications capabilities
  - standard voice features
  - enhanced business features
  - sophisticated least cost routing
- Operational flexibility
  - on-site or remote diagnostics
  - on-site or remote data base changes
- System software flexibility provides user control of requirements
- Tenant partitioning

Package B

1.4.2 Package B includes the following features and capabilities:

- Basic data switching capabilities
  - simultaneous voice/data transmission
  - asynchronous and synchronous up to 19.2 Kbps support
  - half and full duplex transmission mode
  - one-pair wiring
- System software flexibility
  - flexible configuration of system options
  - software control via an MCT (Master Control Telephone)
- Digital telephone set with soft key operation

- Message Waiting on single-line telephones
- External paging capability

Package C

1.4.3 Package C includes the following features and capabilities:

- Multi-function attendant services
- Hotel/Motel feature package
- Key telephone applications
- DID (Direct Inward Dialing)
- DISA (Direct Inward System Access)
- Expanded system capacity to 104 trunks/240 stations
- Hotel/Motel and Health Care package
- DIU (Data Interface Unit) for data transmission with or without EKT

Package D

1.4.4 Package D includes the following features and capabilities:

- Multi-Station Appearance
- Dictation Access and Control
- Attendant DTMF Sending
- ACD (Automatic Call Distribution)
- Attendant Extending to ACD
- Silent Messages
- Recorded Voice Announcement
  - ACD answering and waiting message
  - DID vacant number message
  - DISA guidance message
  - H/M (Hotel/Motel) wake-up message
  - time reminder message
  - announcement message
  - hold message
  - ACD music
  - waiting message for H/M wake-up/time reminder message

Shipping of System Components

1.5 The system is shipped to the installation site in a number of containers. A listing of part numbers and descriptions is included in Appendix II. A breakdown by individual containers and contents is as follows:

- Basic cabinet with mounting bracket and power supply
- Expansion cabinet with mounting bracket and power supply
- Line and trunk cards
- CCG (Common Control Group) cards (CPM, MEM, SWC for basic system and CPM, MEM, SWB-A, SWE kit for expanded system)

- Telephone instruments *
- Ring generator (for use with single-line telephones)
- Power Failure Transfer cards 6PFT or 6PFE (if applicable)

* Wall-mounting kits for proprietary electronic key sets must be ordered separately.

Handling And Unpacking System Components

1.6 The following guidelines should be observed when unpacking and inspecting the system components.

1. Inspect all shipping container(s) for evidence of damage during shipment. If such evidence is found, advise the carrier and distributor.

2. Open the shipping container(s) and remove the contents.

3. Inspect the contents of the container(s) for any evidence of damage. If such evidence is found, advise the carrier and distributor.

4. Ensure that the back-up battery is installed in the battery compartment.

CAUTION

When removing the equipment cabinet from the container, place it on the floor on its back with the door facing up. DO NOT place any weight on the bottom of the cabinet. Damage to the connector board could result.

When handling cards, do not remove them from the anti-static bags until card installation. Cards should be handled by the extractor tabs to avoid damage to the edge connectors. Take normal precautions against electrostatic discharge to CMOS (Complementary Metal-Oxide Semiconductor) devices (anti-static spray, grounding, etc.).

Account for all system components before discarding packing materials.

Pre-Installation Information

1.7 A mounting area that meets a minimum wall load requirement of 100 pounds for one cabinet or 200 pounds for two cabinets should be chosen. A minimum service area of approximately 13 square feet is required as shown in Figure 1.3. The mounting area should be in close proximity to the required 120 VAC, 60 Hz power source.

Power Requirements

1.7.1 The power requirements are as follows:

- Voltage: 96 to 127 VAC
- Frequency: 60 Hz ± 5 Hz
- Phase: single phase
- Nominal current: 5A rated current
- Maximum current: 25A maximum surge
- Power consumption: about 350W (depending on system configuration)

If the AC power cord will not reach the facility power source, the installer should check the local electrical codes before attempting to install a longer cord.

Although standard power provides an acceptable level of performance for most installations, some will require the power failure transfer feature which switches pre-designated stations to assigned outgoing trunks during power outages.

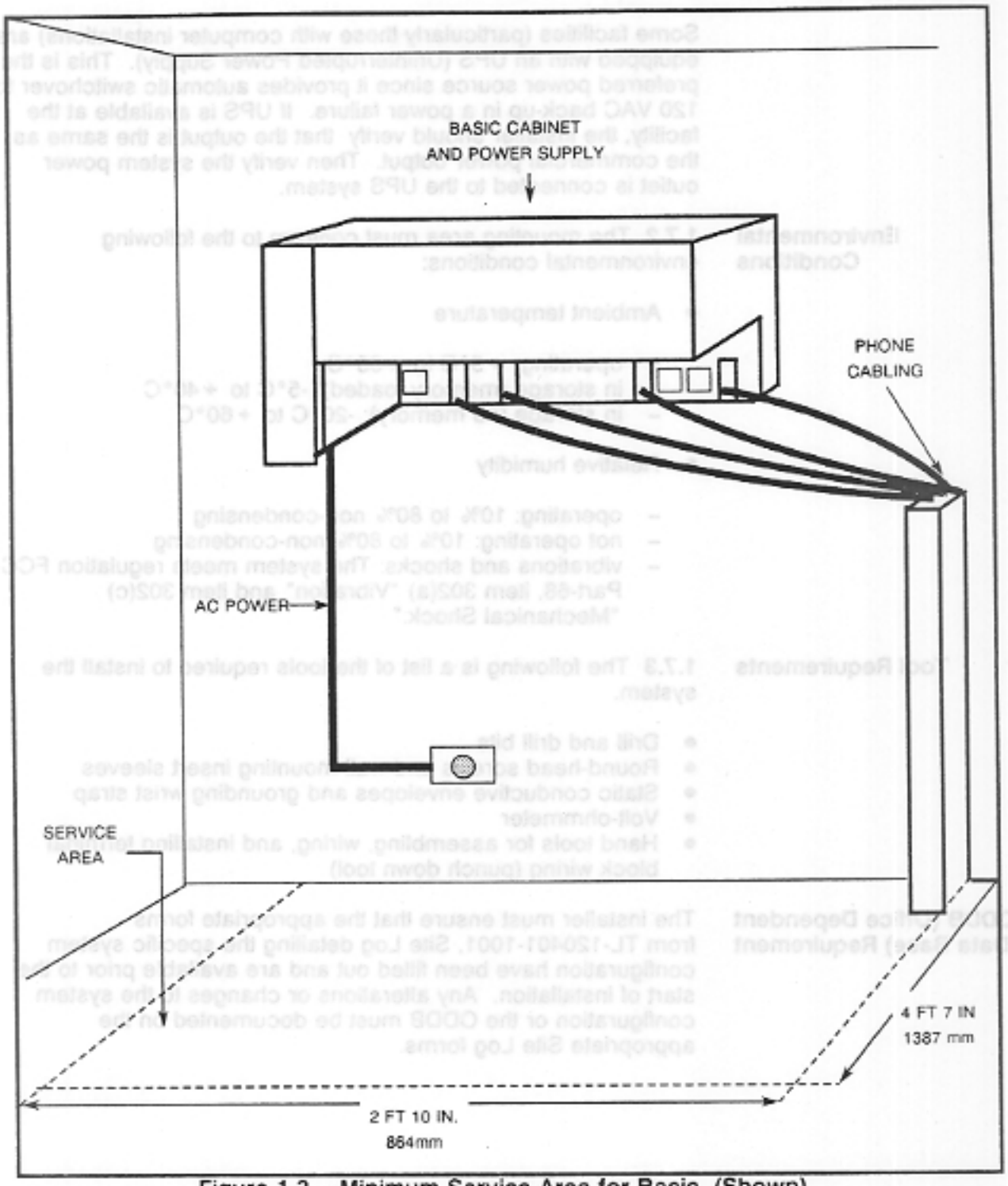

Figure 1.3 Minimum Service Area for Basic (Shown) and Expansion Cabinet

Some facilities (particularly those with computer installations) are equipped with an UPS (Uninterrupted Power Supply). This is the preferred power source since it provides automatic switchover to 120 VAC back-up in a power failure. If UPS is available at the facility, the installer should verify that the output is the same as the commercial power output. Then verify the system power outlet is connected to the UPS system.

Environmental Conditions

1.7.2 The mounting area must conform to the following environmental conditions:

- Ambient temperature
  - operating: +5°C to +35°C
  - in storage (memory loaded): -5°C to +40°C
  - in storage (no memory): -20°C to +60°C
- Relative humidity
  - operating: 10% to 80% non-condensing
  - not operating: 10% to 80% non-condensing
  - vibrations and shocks: The system meets regulation FCC Part-68, item 302(a) "Vibration" and item 302(c) "Mechanical Shock."

Tool Requirements

1.7.3 The following is a list of the tools required to install the system.

- Drill and drill bits
- Round-head screws and wall-mounting insert sleeves
- Static conductive envelopes and grounding wrist strap
- Volt-ohmmeter
- Hand tools for assembling, wiring, and installing terminal block wiring (punch down tool)

ODDB (Office Dependent Data Base) Requirement

The installer must ensure that the appropriate forms from TL-120401-1001, Site Log detailing the specific system configuration have been filled out and are available prior to the start of installation. Any alterations or changes to the system configuration or the ODDB must be documented on the appropriate Site Log forms.

INSTALLATION OF EQUIPMENT CABINET(S), POWER SUPPLY(S), CABLING, AND COMMON CONTROL CARDS

2.0 This section contains installation information for system-level components common to all installations. These components include the equipment cabinets, power supply units, cabling, and common control cards. Separate installation procedures are presented for the basic (one-cabinet) system, and the expanded (two-cabinet) system. Complete section 2.1 below, then proceed to section 2.3 for the basic system. Complete section 2.1 below and section 2.2 before proceeding to section 2.3 for the expansion system.

Installation of Equipment Cabinet and Power Supply for the Basic System

2.1 This paragraph contains installation information for mounting the basic system equipment cabinet, installing the power supply, and grounding and wiring the basic cabinet.

Unpacking and Inspecting Equipment

2.1.1 Unpack, inspect, and verify shipment of the following components:

- Equipment cabinet with back-up battery (basic cabinet)
- Power supply unit with AC power cord
- Power cable (power supply to cabinet)
- Mounting bracket
- Screws for connector

The following mounting hardware is not shipped and must be obtained locally:

- Mounting bolts: expansion bolts, or No.10 bolts with insert sleeves, or No. 10 x 5/8 inch woodscrews (minimum size)

  NOTE: If an expanded system (two cabinets) is being installed, both cabinet brackets should be mounted at the same time. See section 2.2.

- Frame ground wire: 6AWG minimum

Mounting the Mounting Bracket

2.1.2 The mounting bracket is attached to the wall, and the equipment cabinet and power supply are mounted to the bracket. The following mounting procedure is recommended. Either expansion bolts or bolts and insert sleeves can be used. The bolts must be at least a No. 10 bolt; or, if the bracket is mounted on wood, the minimum size wood screw permitted is a No. 10 x 5/8 inch.

Drill Mounting Bolt Holes

2.1.2.1 The bolt holes are drilled as follows:

1. Find and mark the stud locations behind the walls where the cabinet and power supply unit are to be mounted. The mounting bracket provides holes for either 24-inch or 32-inch stud center-to-center distances. For masonry or other wall materials, either mounting can be used. The center-to-center height distance is 12 inches. (See Figure 2.1.)
2. Mark the positions of the four holes to be drilled in the wall for the mounting bracket.
3. Mark the center of the marked holes using a drill or punch.
4. Drill each marked hole to the correct depth and width for the bolts/sleeves or screws to be used.
4. If sleeve inserts are used, drive one into each of the holes.

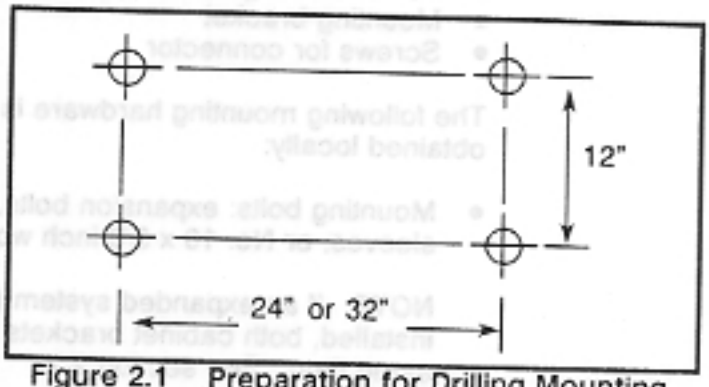

Figure 2.1 Preparation for Drilling Mounting Bolt Holes

Mount the Mounting Bracket

2.1.2.2 The mounting bracket is attached as follows:

1. Align the mounting bracket with the drilled holes in the wall. (See Figure 2.2.)
2. Insert and tighten the mounting bolts or screws.

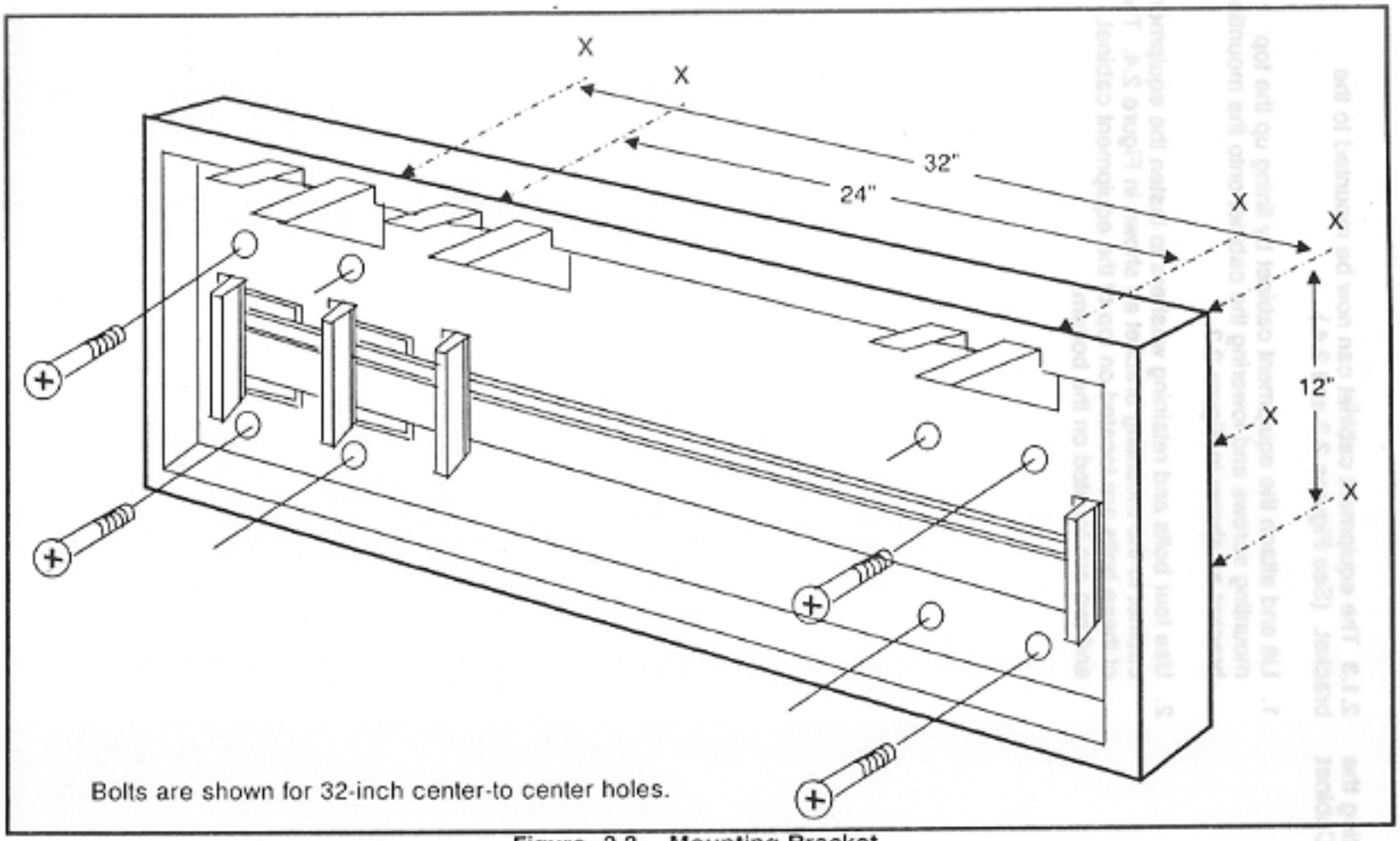

Figure 2.2 Mounting Bracket

Mounting the Equipment Cabinet

2.1.3 The equipment cabinet can now be mounted to the bracket. (See Figures 2.3 and 2.4.)

1. Lift and attach the equipment cabinet by lining up the top mounting screws and lowering the cabinet onto the mounting bracket as shown in Figure 2.3.

2. Use four bolts and retaining washers to fasten the equipment cabinet to the mounting bracket as shown in Figure 2.4. Two of these bolts are located on top of the equipment cabinet, and two are located on the bottom.

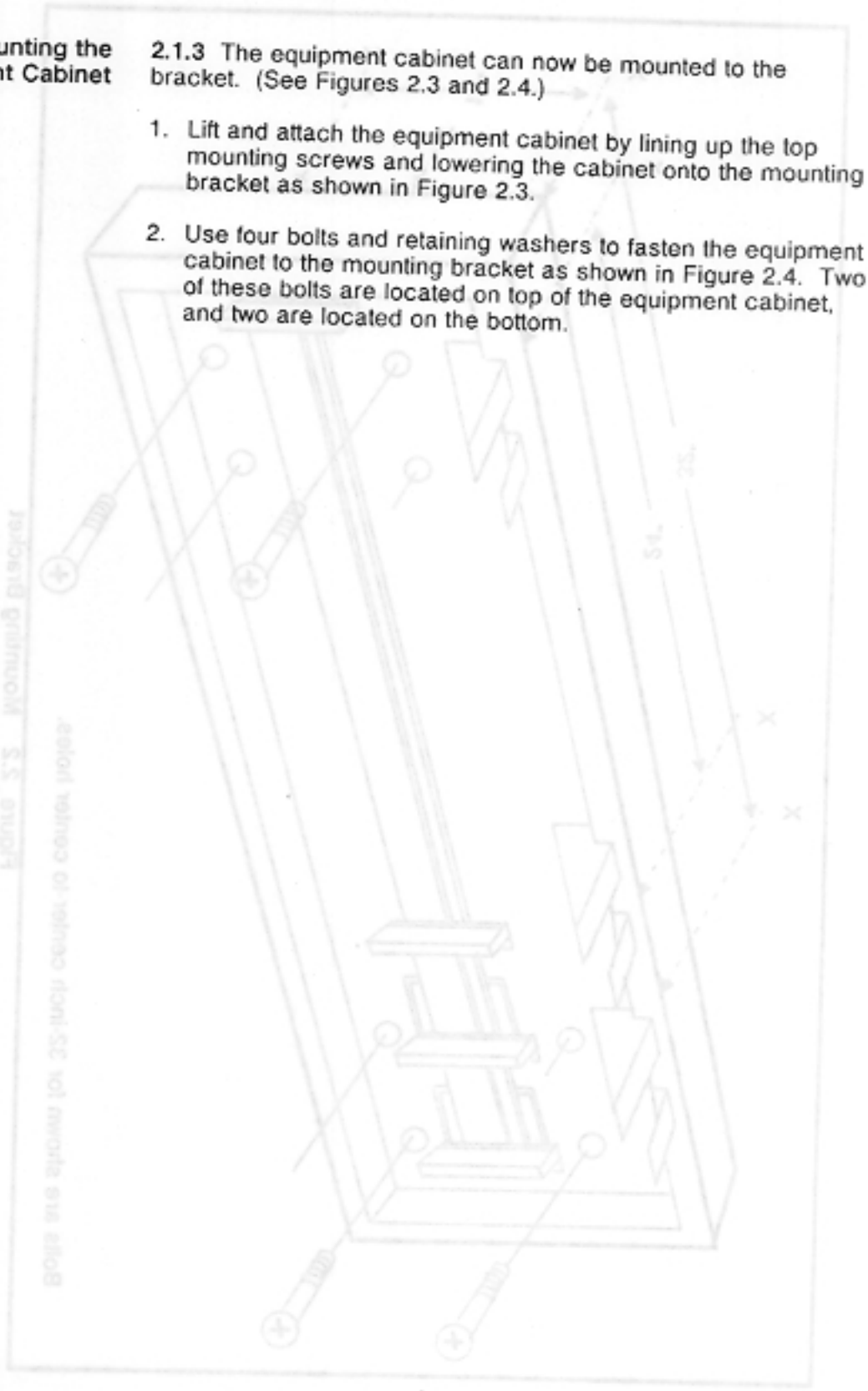

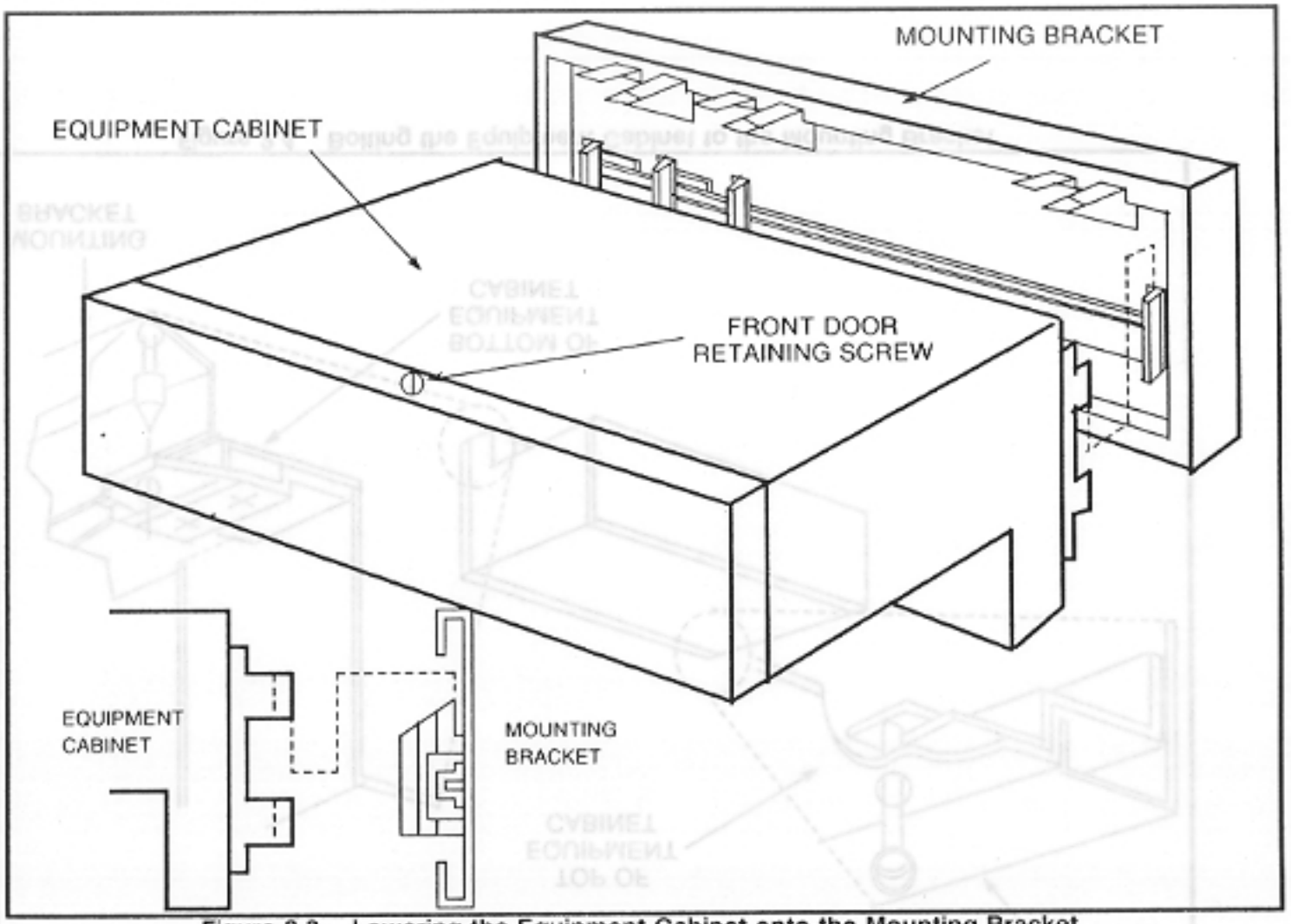

Figure 2.3 Lowering the Equipment Cabinet onto the Mounting Bracket

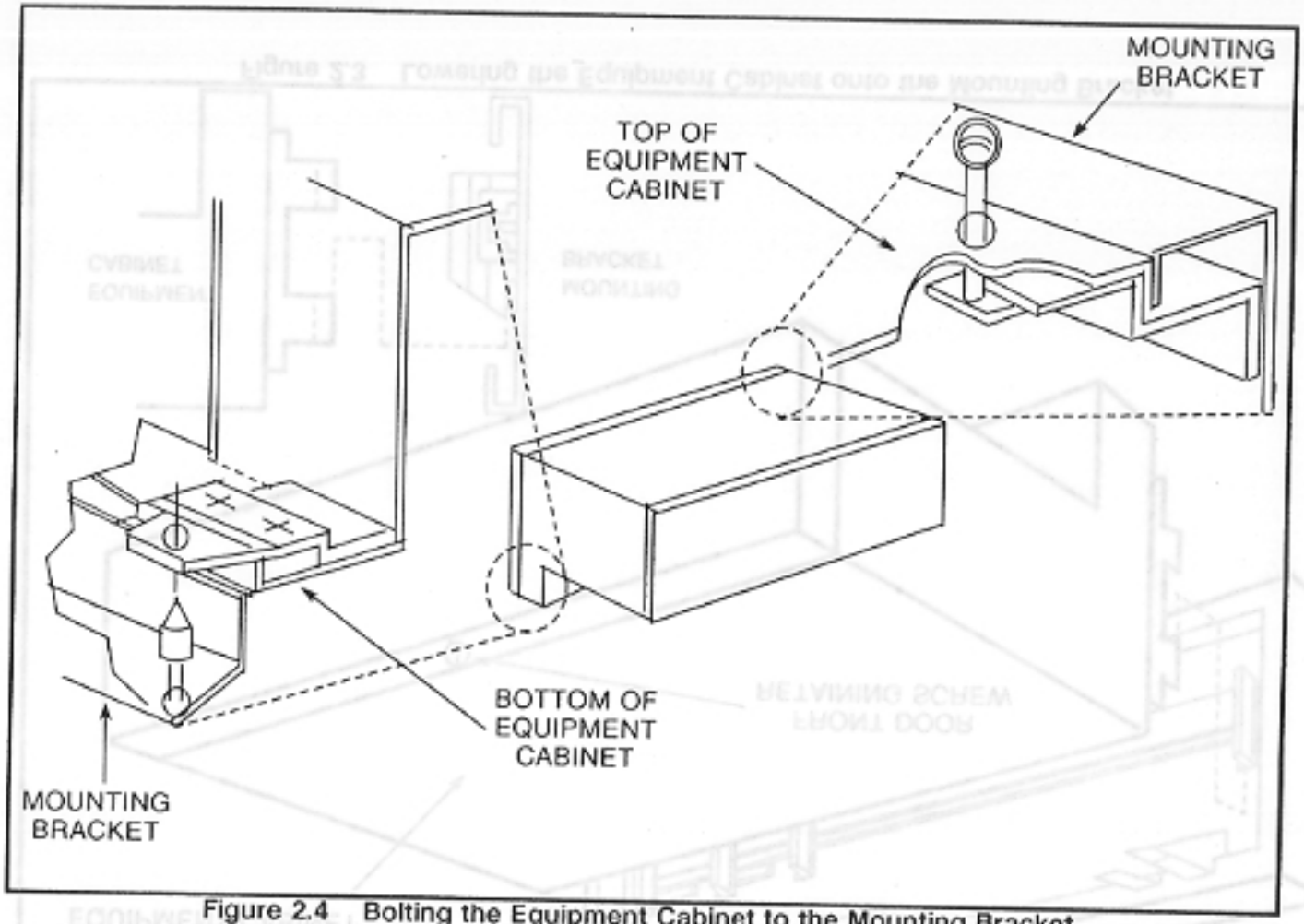

Figure 2.4 Bolting the Equipment Cabinet to the Mounting Bracket

Mounting the Equipment Cabinet Power Supply Unit

2.1.4 The power supply unit can now be mounted in the equipment cabinet.

1. Lift the power supply unit and attach it to the left-hand side of the mounting bracket, lining up the mounting screws.

2. Use two bolts to attach the power supply unit to the mounting bracket; one is located on the top of the power supply unit, and the other is located on the bottom. Each bolt has a retaining washer.

Grounding the Basic System

2.1.5 The system requires three ground wires (see Figure 2.5): one for the equipment cabinet frame ground (safety ground); a second for the power supply unit frame ground; and a third for the equipment cabinet signal ground. The ground wires must be a minimum of 6AWG insulated copper.

CAUTION

DO NOT overtighten the ground connection for the frame ground terminal on the power supply. The connector could thread off in the power supply.

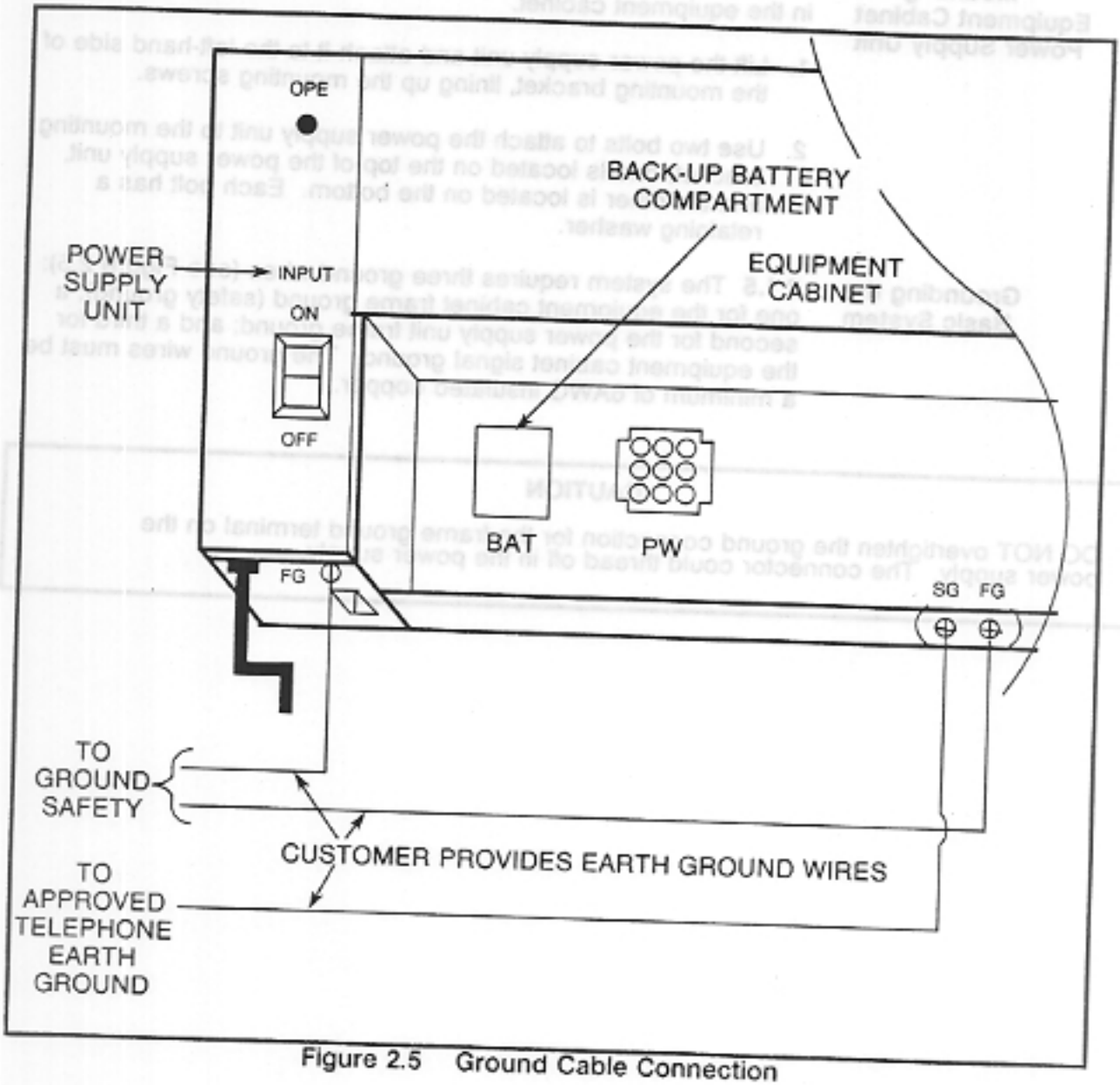

Figure 2.5 Ground Cable Connection

The signal ground wire must be connected to an approved telephone earth ground, and the DC resistance of the wire from the equipment cabinet to the grounding point should be as close to zero as possible. Figure 2.6 shows the ground wire terminals for the equipment cabinet and the power supply unit.

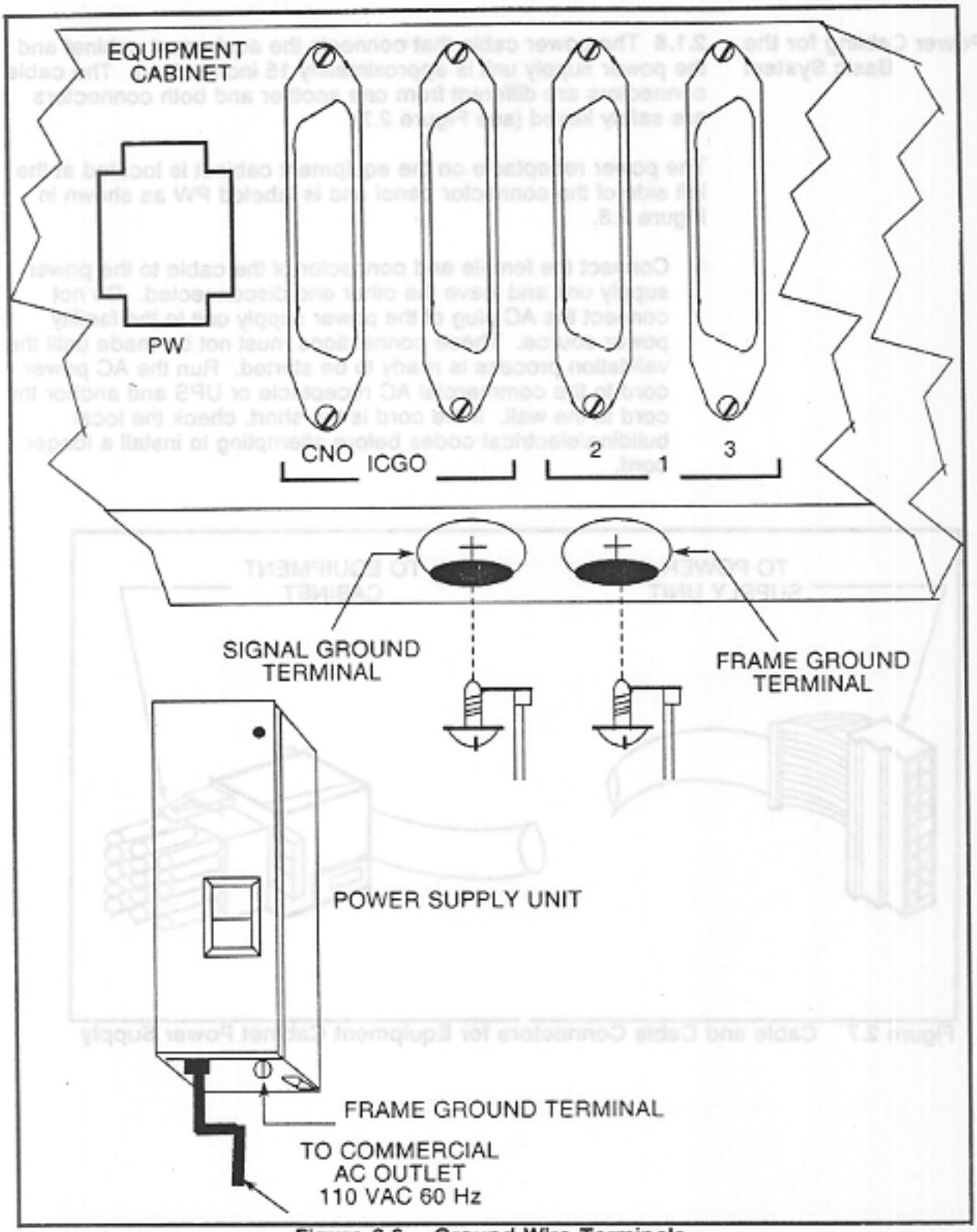

Figure 2.6 Ground Wire Terminals

Power Cabling for the Basic System

2.1.6 The power cable that connects the equipment cabinet and the power supply unit is approximately 15 inches long. The cable connectors are different from one another and both connectors are safety keyed (see Figure 2.7).

The power receptacle on the equipment cabinet is located at the left side of the connector panel and is labeled PW as shown in Figure 2.8.

1. Connect the female end connector of the cable to the power supply unit and leave the other end disconnected. Do not connect the AC plug of the power supply unit to the facility power source. These connections must not be made until the validation process is ready to be started. Run the AC power cord to the commercial AC receptacle or UPS and anchor the cord to the wall. If the cord is too short, check the local building/electrical codes before attempting to install a longer cord.

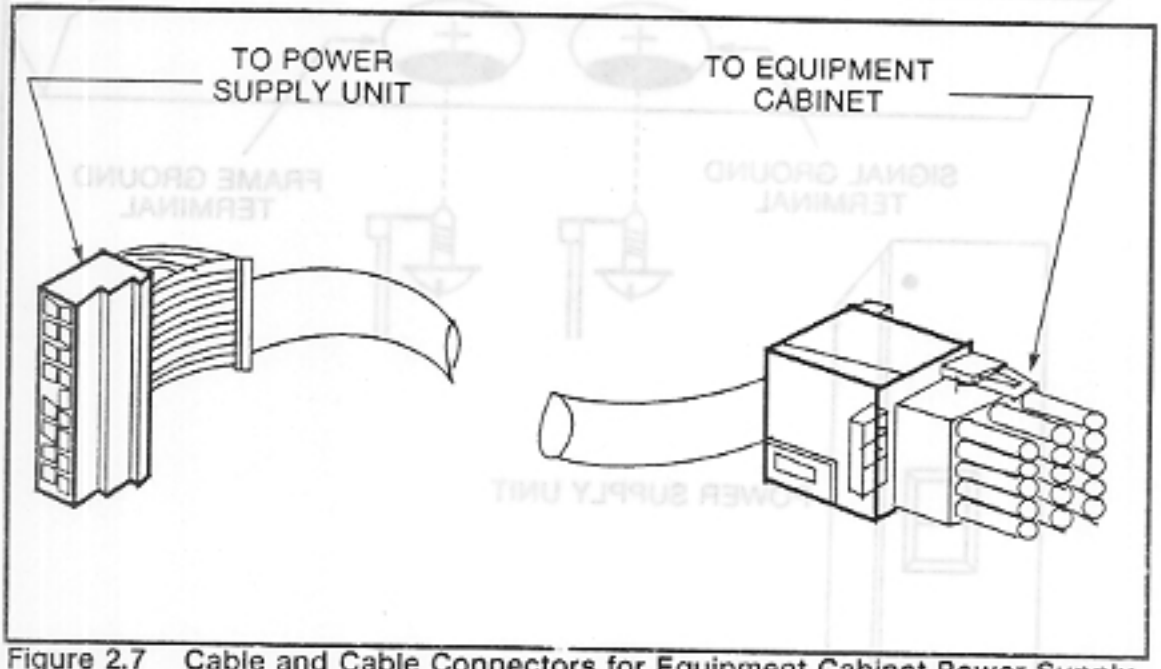

Figure 2.7 Cable and Cable Connectors for Equipment Cabinet Power Supply

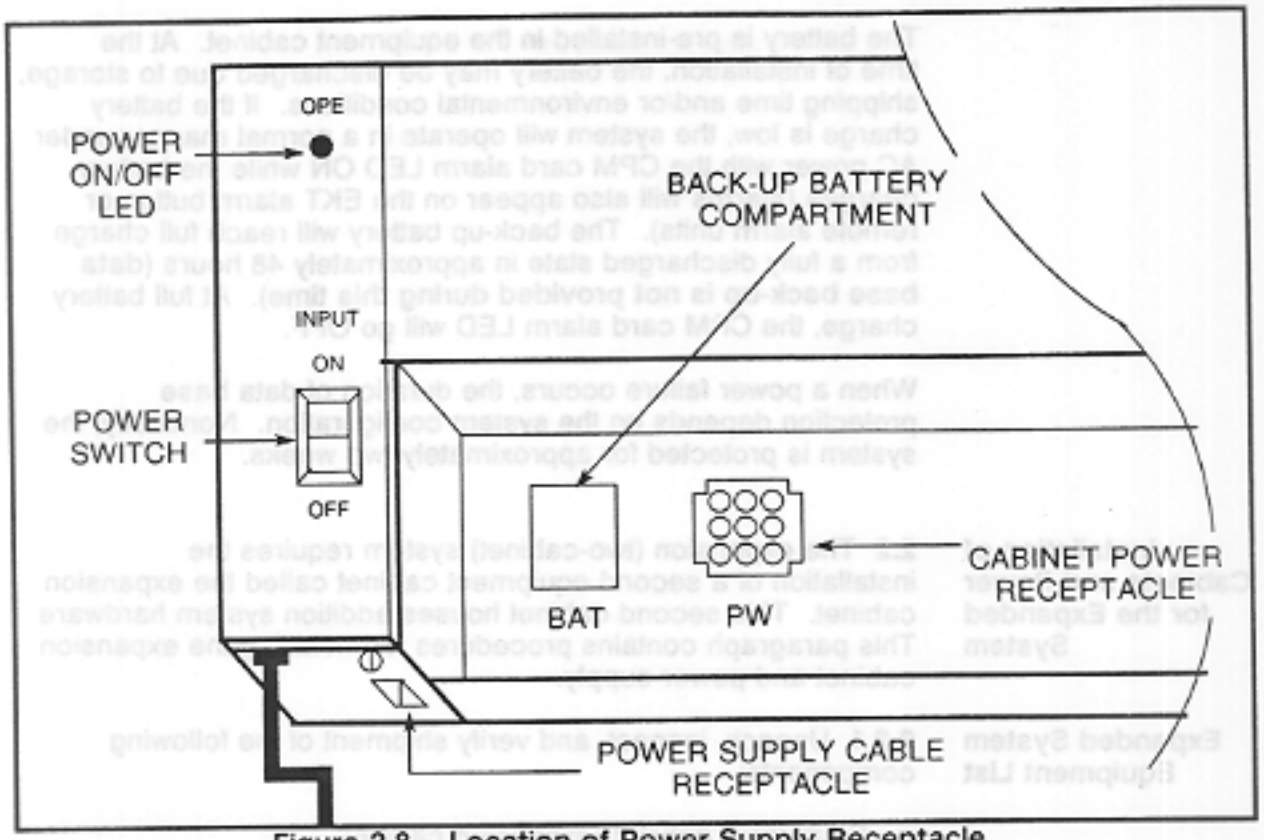

Figure 2.8 Location of Power Supply Receptacle

Battery Back-up of the Basic System

2.1.7 A back-up battery is provided to protect the data base in the event of a power failure. The range of charge required for data base protection is 2.1 to 3.6 VDC. As a safety feature, a battery alarm is provided by the alarm LED on the CPM card. The alarm LED (as well as the EKT alarm button or any remotely installed alarms) will light steadily when there is a potentially low battery charge.

The battery is pre-installed in the equipment cabinet. At the time of installation, the battery may be discharged due to storage, shipping time and/or environmental conditions. If the battery charge is low, the system will operate in a normal manner under AC power with the CPM card alarm LED ON while the battery charges (alarms will also appear on the EKT alarm button or remote alarm units). The back-up battery will reach full charge from a fully discharged state in approximately 48 hours (**data base back-up is not provided during this time**). At full battery charge, the CPM card alarm LED will go OFF.

When a power failure occurs, the duration of data base protection depends on the system configuration. Nominally, the system is protected for approximately two weeks.

Installation of Cabinets and Power for the Expanded System

2.2 The expansion (two-cabinet) system requires the installation of a second equipment cabinet called the expansion cabinet. This second cabinet houses addition system hardware. This paragraph contains procedures for installing the expansion cabinet and power supply.

Expanded System Equipment List

2.2.1 Unpack, inspect, and verify shipment of the following components:

- Equipment cabinet (expansion cabinet)
- Power supply unit with AC power cord
- Power cable (power supply to cabinet)
- Mounting bracket
- Screws for connector
- Inter-module cable

The following mounting hardware is not shipped and must be obtained locally:

- Mounting bolts: expansion bolts, or No.10 bolts with insert sleeves, or No. 10 x 5/8 inch woodscrews (minimum size).

- Frame ground wire - 6AWG minimum

Mounting the Expansion Cabinet Mounting Bracket

2.2.2 The mounting bracket for the expansion cabinet is mounted on the wall below the basic cabinet.

Drill Mounting Bolt Holes

2.2.2.1 Using the procedures and measurements from paragraph 2.1 drill a set of mounting bolt holes that will position the expansion cabinet mounting bracket below the basic cabinet bracket.

Mount the Mounting Bracket

2.2.2.2 The expansion cabinet mounting bracket is mounted identically to the basic cabinet bracket as described in paragraph 2.1.

Mounting the Expansion Cabinet

2.2.3 The expansion cabinet is attached to the mounting bracket in the identical manner as the basic cabinet as described in paragraph 2.1.

Mounting the Expansion Cabinet Power Supply Unit

2.2.4 The expansion cabinet power supply unit is attached to the mounting bracket in the identical manner as the basic cabinet power supply unit as described in paragraph 2.1.

Grounding the Expanded System

2.2.5 Grounding for the expanded system is similar to grounding for the basic system as described in paragraph 2.1, with the exception of additional inter-module connections as shown in Figure 2.9.

Power Cabling for the Expansion System

2.2.6 Power cabling for the expanded system is identical to power cabling for the basic system as described in paragraph 2.1, with the exception of additional inter-cabinet connections as shown in Figure 2.9 and described in paragraph 2.4.

Battery Back-up of the Expanded System

2.2.7 Since the expansion cabinet does not house processing and memory cards, a back-up battery is not required. Battery back-up for the expanded system is provided by the basic cabinet back-up battery.

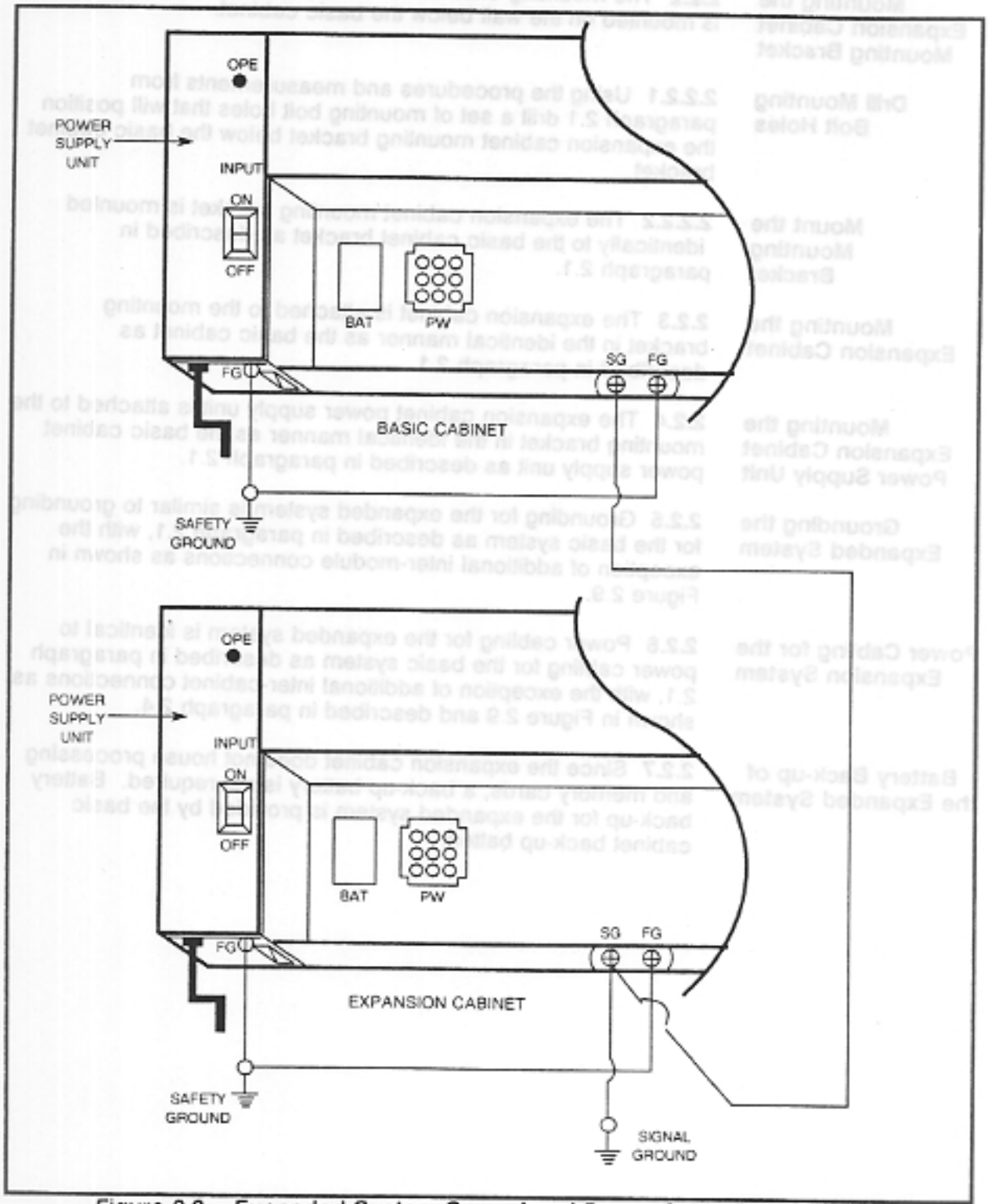

Figure 2.9 Expanded System Ground and Power Cable Connections

CCG (Common Control Group) Installation for the Basic System

2.3 This paragraph describes the installation of CCG (Common Control Group) cards for the basic system. These cards perform the switching, call processing, and control functions. Guidelines for handling, inserting, seating/unseating, and removing cards are provided.

Handling, Inserting, Seating/Unseating, and Removing Cards

2.3.1 Each card has a plastic ejector lever on the top and bottom of the outside card edge. When the card is inserted into a card slot, the card type shows on the top ejector. All cards except RGEN have components facing left when in a slot. The CCG cards have a pin guide which prevents installation in line or trunk card slots.

Handling Cards

2.3.1.1 Handle the cards by the extractor tabs (do not touch the edge connectors).

Inserting/Seating Cards

2.3.1.2 Insert and seat the cards as follows:

1. Protect against electrostatic discharge. Wear a wrist strap clipped to ground.
2. Remove the card from the anti-static plastic bag.
3. Ensure proper orientation:
   (a) Card edge connectors face toward the backplane.
   (b) Card edges ride on tracks (top and bottom). Slot numbers are marked on the frame top, to the left of the slot. CCG card slots are marked on the frame bottom, to the left of the slot.
   (c) Card type imprint shows on the top ejector; components are on the left (except RGEN).
4. Slide the card into a slot and push in with gentle pressure until it stops.
5. Push simultaneously on the top and bottom ejector levers to seat the card in the backplane.

Unseating/Removing Cards

2.3.1.3 Unseat/remove cards as follows:

1. Protect against electrostatic discharge. Wear a wrist strap clipped to ground.
2. Grasp the top and bottom plastic ejectors.
3. Move the ejectors 90° with some pressure. Top ejector lifts up and toward ceiling; bottom ejector pulls down and toward the floor.

4. The card unseats.

5. To remove the card, pull it out of the cabinet. Do not touch the edge connectors.

6. Place the card in an anti-static bag.

CAUTION

All cards are inserted with components on the left of the card except the RGEN card. Attempts to seat a CCG card in the wrong slot can cause permanent damage to the backplane wiring. Before inserting or removing the CCG cards and the RGEN card, system power must be turned off.

CCG cards have a guide pin to prevent their insertion in an inappropriate card slot. See Figure 2.10

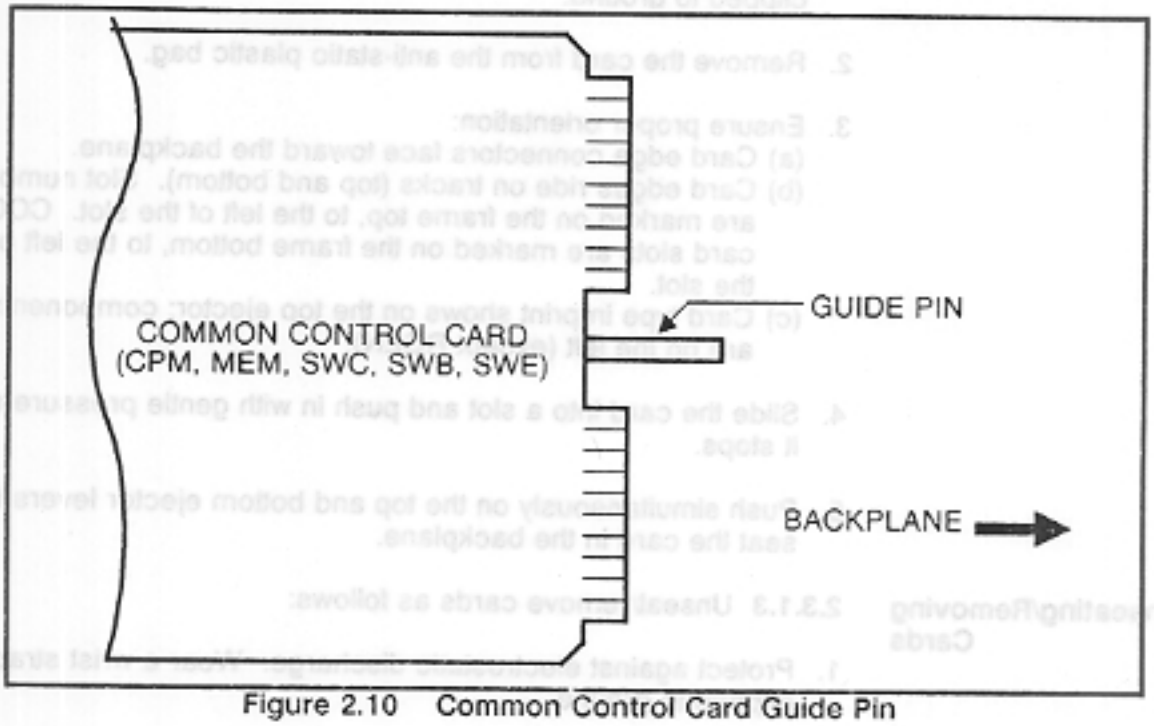

Figure 2.10 Common Control Card Guide Pin

CPM Card Installation

2.3.2 The CPM (Central Processing Unit and Memory) card contains the CPU (Central Processing Unit), which performs system control supervision, and the basic memory which retains the program code. CPMs are labeled CPM-A, CPM-B, CPM-C, or CPM-D depending on the feature package level.

The CPM is installed in the basic cabinet by inserting it into card slot 20 labeled CPM as shown in Figure 2.11.

Hardware Compatibility

Prior to installing the CPM card and MEM (Memory) cards in the basic cabinet, the identification markings on both cards must be compared. The card name and package are stamped on the upper card tabs. The package ID must be the same for both cards; e.g., CPM-C card goes with an MEM-C card, CPM-B card goes with an MEM-B card. If these two cards do not have the same package ID, the system will not work. For Package C only, a hardware version cross-reference guide is necessary to further ensure compatibility of CPM-C and MEM-C cards. A hardware version cross-reference code is part of the bar code number located on the front edge of each card. In the following bar code number, the hardware cross-reference code is underlined:

Example: QC1608E6400977

See Table 2.1 for Package C hardware compatibility.

TABLE 2.1 Hardware Compatibility - Package C

HARDWARE VER. CPM-C	HARDWARE VER. MEM-C	SOFTWARE VER.	REMARKS
07D	07D	CO1 1.2	COMPATIBLE
08E	08E	CO1 1.3	COMPATIBLE
09F	08E	CO1 1.4	COMPATIBLE
10G 11G 12G 13G	10F 11F 12F	CO1 1.5	COMPATIBLE

MEM Card Installation

2.3.3 The Memory (MEM) card provides expanded memory to the CPM card. The MEM card is installed in the basic cabinet by inserting it into card slot 21 labeled MEM as shown in Figure 2.11.

SWC Card Installation

2.3.4 The SWC (Switch Control) card performs the time-division switching, multiplexing, tone source mixing, and padding circuits. The SWC card is installed in the basic cabinet by inserting it into card slot 19 labeled SWC as shown in Figure 2.11.

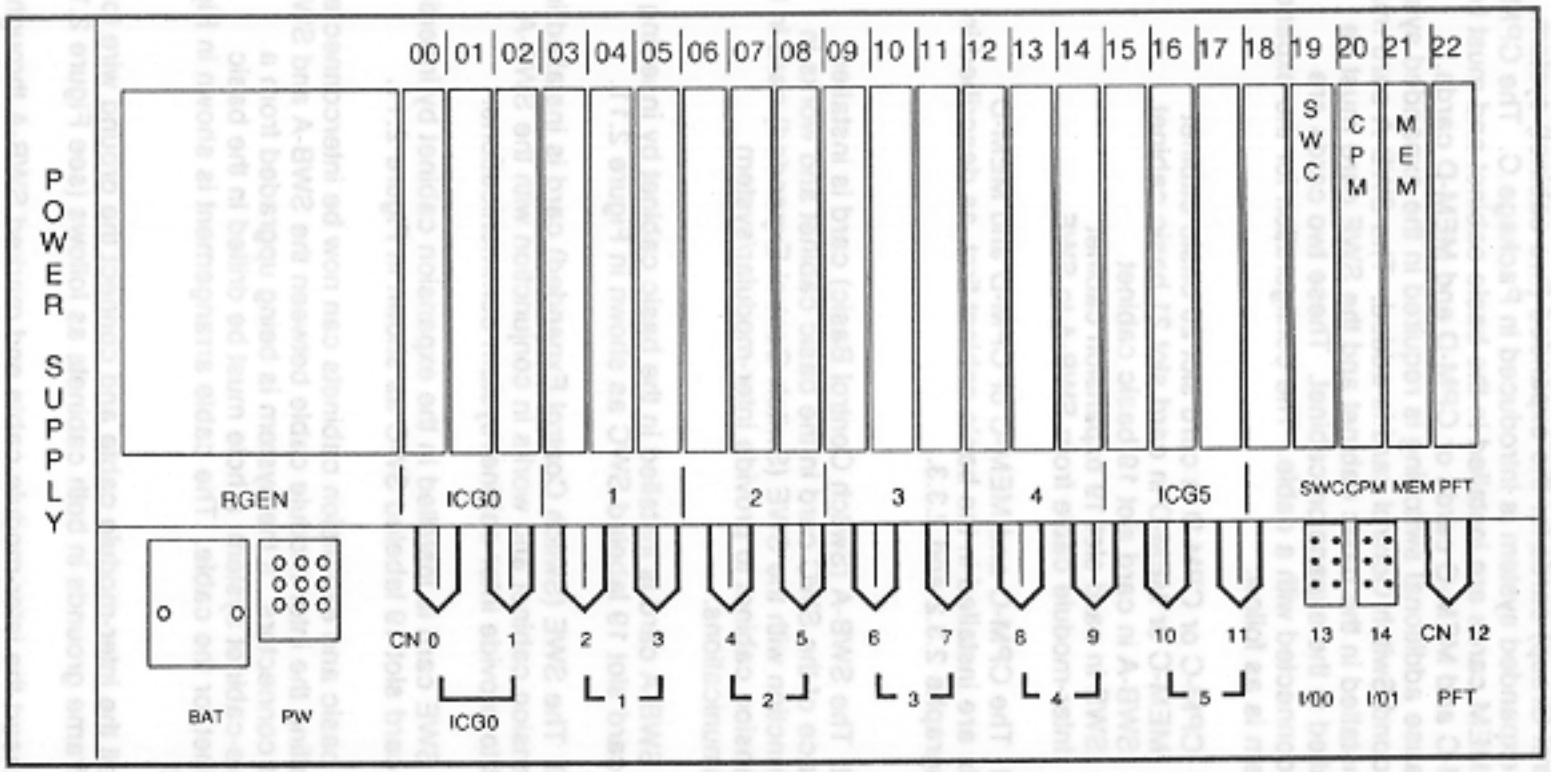

Figure 2.11 Placement of CCG (Common Control Group) Cards

CCG (Common Control Group) Card Installation for Expanded System

2.4 This paragraph describes the installation of CCG (Common Control Group) cards for the expanded (two-cabinet) system. The expanded system is introduced in Package C. The CPM and MEM cards are installed in the basic cabinet and must be CPM-C and MEM-C cards or CPM-D and MEM-D cards. Because additional switching is required in the expanded system, a second Switch Control card is added: The SWB-A card must be installed in the basic cabinet and the SWE card must be installed in the expansion cabinet. These two cards are interconnected with a cable. The configuration for the expanded system is as follow:

- CPM-C or CPM-D in card slot 20 basic cabinet
- MEM-C or MEM-D in card slot 21 basic cabinet
- SWB-A in card slot 19 basic cabinet
- SWE in card slot 19 expansion cabinet
- Inter-module cable from SWB-A to SWE

CPM and MEM Card Installation

2.4.1 The CPM-C and MEM-C or CPM-D and MEM-D cards are installed in the basic cabinet first, as described in paragraphs 2.3.2 and 2.3.3.

SWB-A Card Installation

2.4.2 The SWB-A (Switch Control Basic) card is installed in place of the SWC card in the basic cabinet and works in conjunction with the SWE (Switch Control Expanded) card in the expansion cabinet to provide inter-modular/system communications.

The SWB-A card is installed in the basic cabinet by inserting it into card slot 19 labeled SWC as shown in Figure 2.11.

SWE Card Installation

2.4.3 The SWE (Switch Control Expanded) card is installed in the expansion cabinet and works in conjunction with the SWB-A card to provide inter-cabinet/system communications.

The SWE card is installed in the expansion cabinet by inserting it into card slot 19 labeled SWC as shown in Figure 2.11.

The basic and expansion cabinets can now be interconnected by installing the inter-module cable between the SWB-A and SWE card connectors. If the system is being upgraded from a single-cabinet system, a hole must be drilled in the basic cabinet for the cable. The cable arrangement is shown in Figure 2.12.

Install the inter-module cable and connect the ground wire to the frame grounds in both cabinets as follows (see Figure 2.13):

1. Insert the inter-module cable end marked SWB-A through the slot in the basic cabinet. The slot is on the underside of the cabinet door, to the right of the CPM card slot location.

2. Remove the frame screw located to the right of card slot 22. Slip the screw through the grounding lug and secure the screw to the frame.

3. Connect the cable to the female connector on the front edge of the SWB-A card.

4. Insert the cable end marked SWE through the slot in the expansion cabinet. The slot is on the underside of the cabinet door, to the right of card slot 20 location.

5. Remove the frame screw located to the right of card slot 22. Slip the screw through the grounding lug and secure the screw to the frame.

6. Connect the cable to the female connector on the front edge of the SWE card.

7. Secure any loose cable.

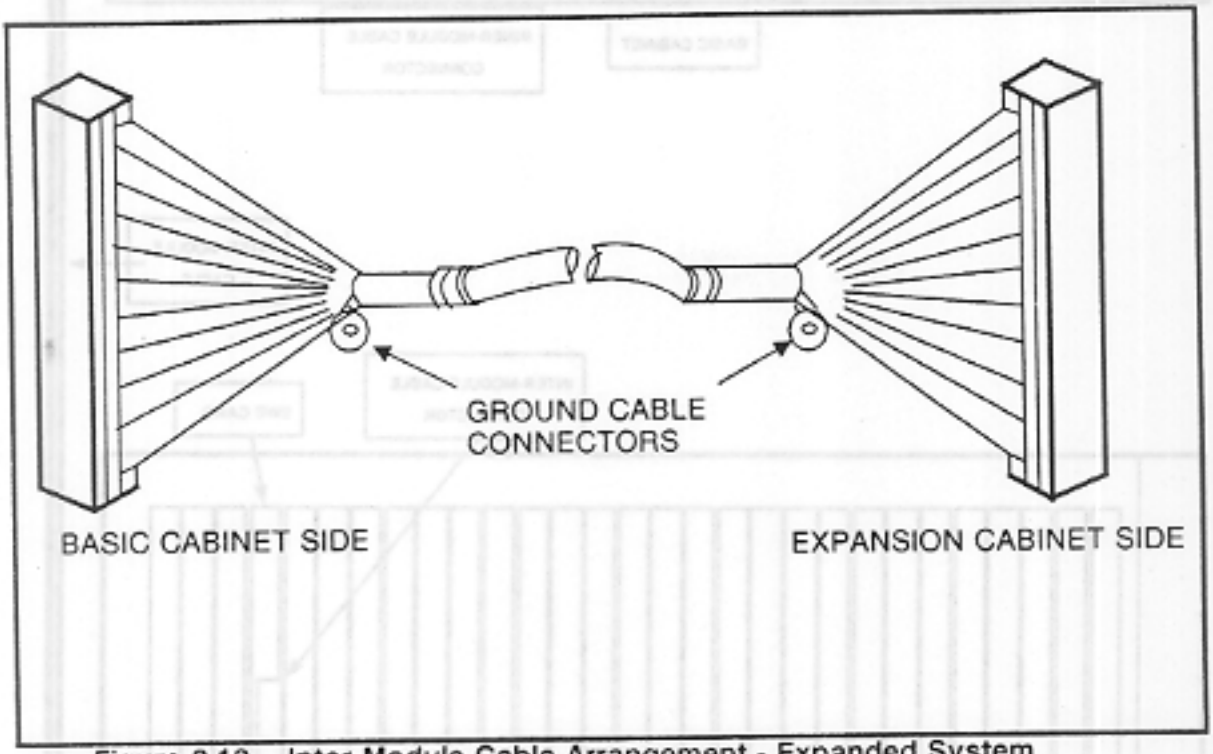

Figure 2.12 Inter-Module Cable Arrangement - Expanded System

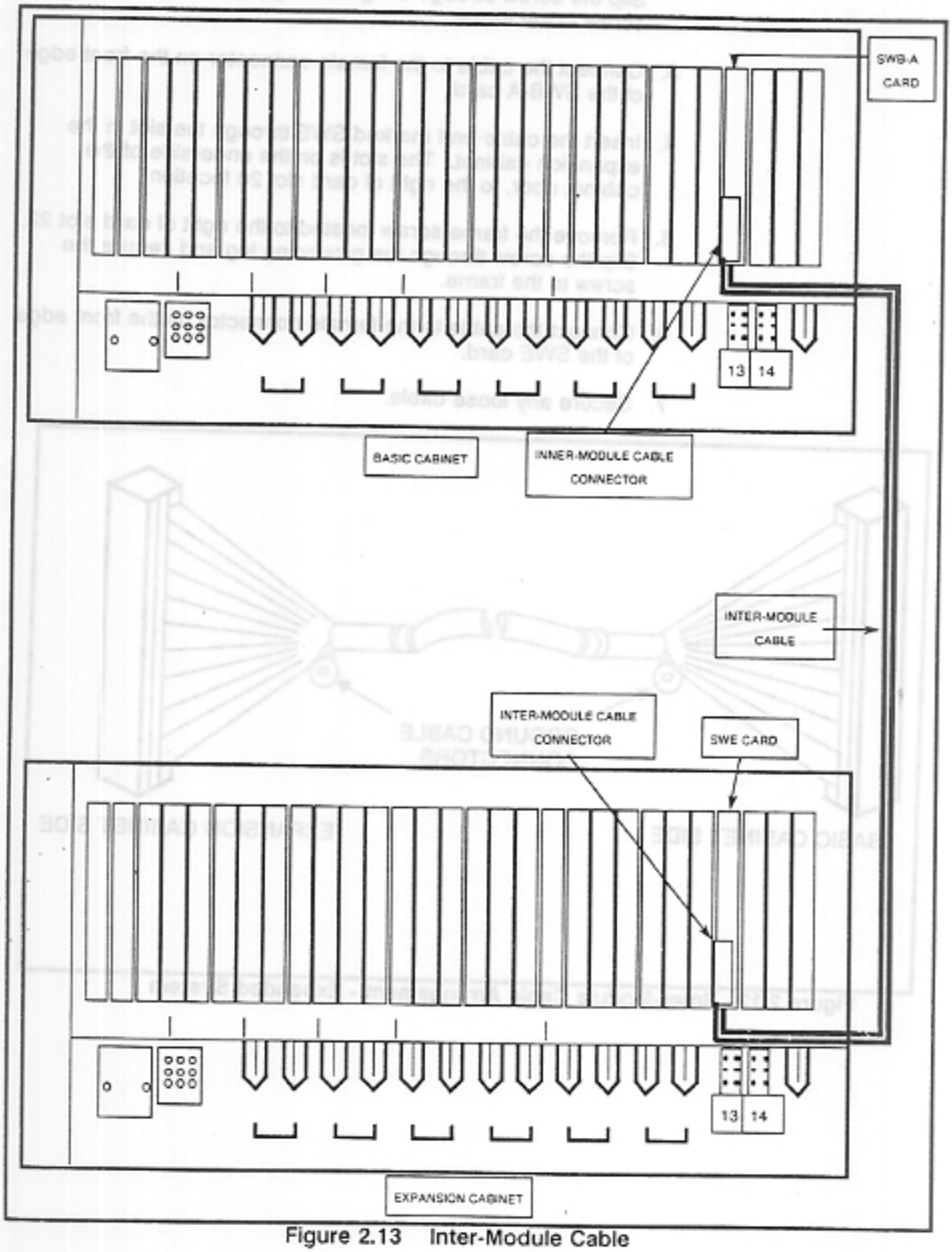

Figure 2.13 Inter-Module Cable

DESCRIPTION OF SYSTEM CARDS, CARD PLACEMENT, AND CROSS-CONNECT WIRING

3.0 This section provides system-level information for configuring the system .

Included is information for configuring the basic and expanded system cabinets with specific line, trunk, and service function cards. Also included is the wiring description for the CDF (Combined Distribution Frame).

The section is provided as a reference for use with the Data Base and Configuration Worksheets that provide the installer with exact quantities and card slot locations for Common Control Group and application-specific cards.

Description of Application-Specific Cards

3.1 The system provides functional support of various user peripherals (station sets, data terminals, etc.) and trunks through a variety of interface (line and trunk) cards. Special service functions such as voice messaging are provided through service function cards. The following paragraphs identify the interface and service function cards and list their specifications and card slot locations.

Trunk Card Specifications

3.1.1 Table 3.1 describes the trunk cards and provides their electrical specifications.

Table 3.1 Trunk Card Specifications

Card	Specifications	Remarks
4BWC	Signaling - Loop Start/Ground Start Number of Circuits - 4 Loop Limit - 3200 ohms (including C.O.)	4 Circuits analog, CO line interface, card slots 06-18
2TTE	Signaling - E&M Signaling Number of Circuits - 2 Loop Limit - Type I signaling: 150 ohms (including other end systems),Type II signaling: 300 ohms (including other end systems)	2 Circuits - Analog, E&M Tie line/DID line interfaces, Card Slots 06-18
2TTL	Signaling - Loop Dial Signaling Number of Circuits - 2 Loop Limit - 3000 ohms (including other end)	2 Circuits analog, loop dial and Tie line/DID line interfaces, card slots 06-18

Line Card Specifications

3.1.2 Table 3.2 describes the line cards and provides their electrical specifications.

Table 3.2 Line Card Specifications

CARD	SPECIFICATION	REMARKS
8SLC	Loop Limit - 600 ohms (including telephone) Line Leakage Resistance - 15K ohms Number of Circuits - 8	8 Circuits analog, standard telephone Interface, card slots 00-14
8EKC	Loop Limit - 2000 ft; 24 AWG Line Leakage Resistance - 15K ohms Wiring - 4 wires/EKT Number of Circuits - 8	8 Circuits for electronic proprietary terminals: (CS 10/20, Attendant Console, and DSS/BLF Console) interfaces, card slots 00-14
8DTC	Loop Limit - 2000 ft; 24 AWG Line Leakage Resistance - 15K ohms Wiring - 2 wires/CSD, DIU Number of Circuits - 8 (Note 1)	8 Circuits digital simultaneous voice/data, CSD Telephone/DIU Interfaces, card slots 00-14 for voice/data, card slots 00, 03, 06, 09, 12 for simultaneous voice/data

NOTE: The 8DTC card can accommodate the following configurations:

- 8 CSDs - voice only
- 8 DIUs
- 6 CSDs w/DTA in addition to two CSDs w/o DTA, or two DIUs

Service Function Card Specifications

3.1.3 Table 3.3 describes the service function cards and provides their electrical specifications.

Table 3.3 Service Function Card Specifications

Card	Specification	Remarks
4DMR	4 Circuits - 4 DTMF (Dual Tone Multi-Frequency Receivers	Slots 00-14 Recommended placement is between trunk and line cards
4CHT	4 Circuits - 4 Character Trunks used for Hotel/Motel option	Slots 00-14
RGEN	Ring Generator - Provides 80V AC to station sets	Supplies -100 VDC to power station set neon lamps and ringing for SLTs
RVAC	Recorded Voice Announcement Card stores up to seven 4-second blocks or one 28-second message	Messages are protected by Battery Back-up (on card) Slots 00-14
6PFT	6 Circuits Power Failure Transfer Card - Transfers up to 6 Circuits to predetermined outgoing trunks in the event of power failure. Used only in basic cabinet.	Provides ports to repeat alarms to external source through relay closures Slot 22
6PFE	6 Circuits Power Failure Expansion - Same as above but switch selectable for use in basic or expansion cabinet	Same as above for expansion cabinet Slot 22

Hierarchy of System Cards/Cables

3.2 The basic and expanded system cabinets can accommodatesix Interface Card Groups (ICG0 through ICG5) as shown in Figure 3.1. Each card group has three associated card slots which are numbered across the top of the cabinet face. (See slots 00 through 18 in Figure 3.1. Slots 19 through 22 are dedicated card slots.) There are two types of circuit cards, line and trunk; line cards service up to 8 circuits and trunk cards service up to 4 circuits. There are twelve 25-pair cable AMP female connector receptacles associated with the cabinet (CN0 through CN12). Two 25-pair CDF cables are used with each line/trunk card group, equating to two CDF cables per three cards. The trunk only group, ICG5, services up to four cards with two cables, CN10 and CN11.

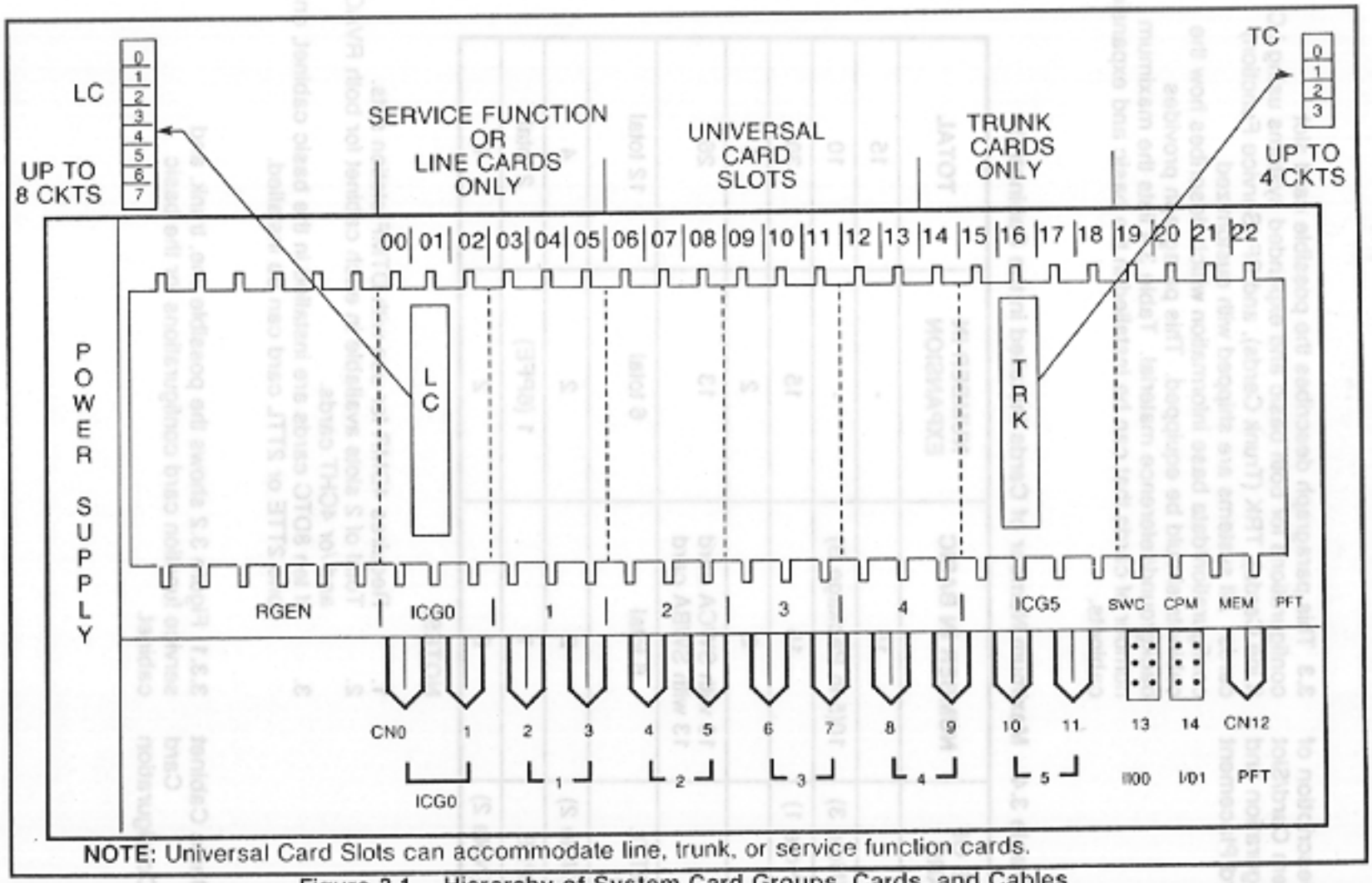

NOTE: Universal Card Slots can accommodate line, trunk, or service function cards.

Figure 3.1 Hierarchy of System Card Groups, Cards, and Cables

Description of System Card/Slot Configuration and Card Placement

3.3 This paragraph describes the possible card slot configurations for both basic and expanded systems using LC (Line Cards), TRK (Trunk Cards), and SF (Service Function) cards. All systems are shipped with customized configuration/data base information which describes how the cabinets should be equipped. This paragraph provides background/reference material. Table 3.4 lists the maximum number of cards that can be installed in the basic and expansion cabinets.

Table 3.4 Maximum Number of Cards Installed in the Cabinet(s)

TYPE OF CARD	NUMBER IN BASIC	NUMBER IN EXPANSION	TOTAL
8EKC	15	-	15
8DTC (Note 3)	10(5 in Package B)	-	10
8SLC (Note 1)	15	15	30
4DMR	2	2	4
4BWC	10 with SWCA card 13 with SWBA card	13	26
2TTE, 2TTL (Note 3)	6 total	6 total	12 total
4CHT (Note 2)	2	2	4
6PFT/6PFE	1	1 (6PFE)	2 total
RVAC (Note 2)	2	2	4

NOTES:

1. Requires 4DMR for use with DTMF station sets.
2. Total of 2 slots available in each cabinet for both RVAC and /or 4CHT cards.
3. If ten 8DTC cards are installed in the basic cabinet, only one 2TTE or 2TTL card can be installed.

Basic Cabinet Card Configuration

3.3.1 Figure 3.2 shows the possible line, trunk, and service function card configurations for the basic cabinet.

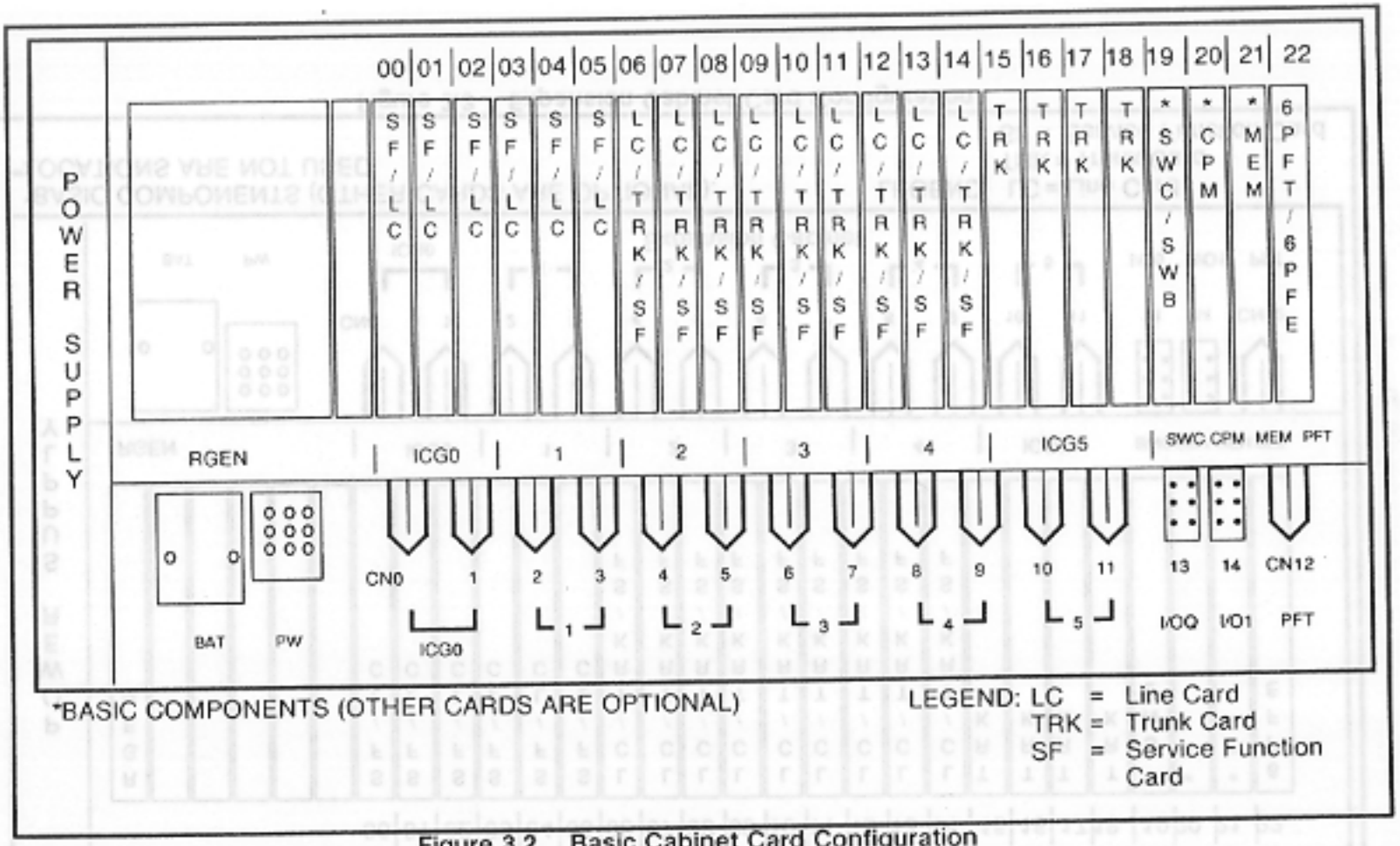

Figure 3.2 Basic Cabinet Card Configuration

Expansion Cabinet Card Configuration

3.3.2 Figure 3.3 shows the possible line, trunk, and service function card configurations for the expansion cabinet.

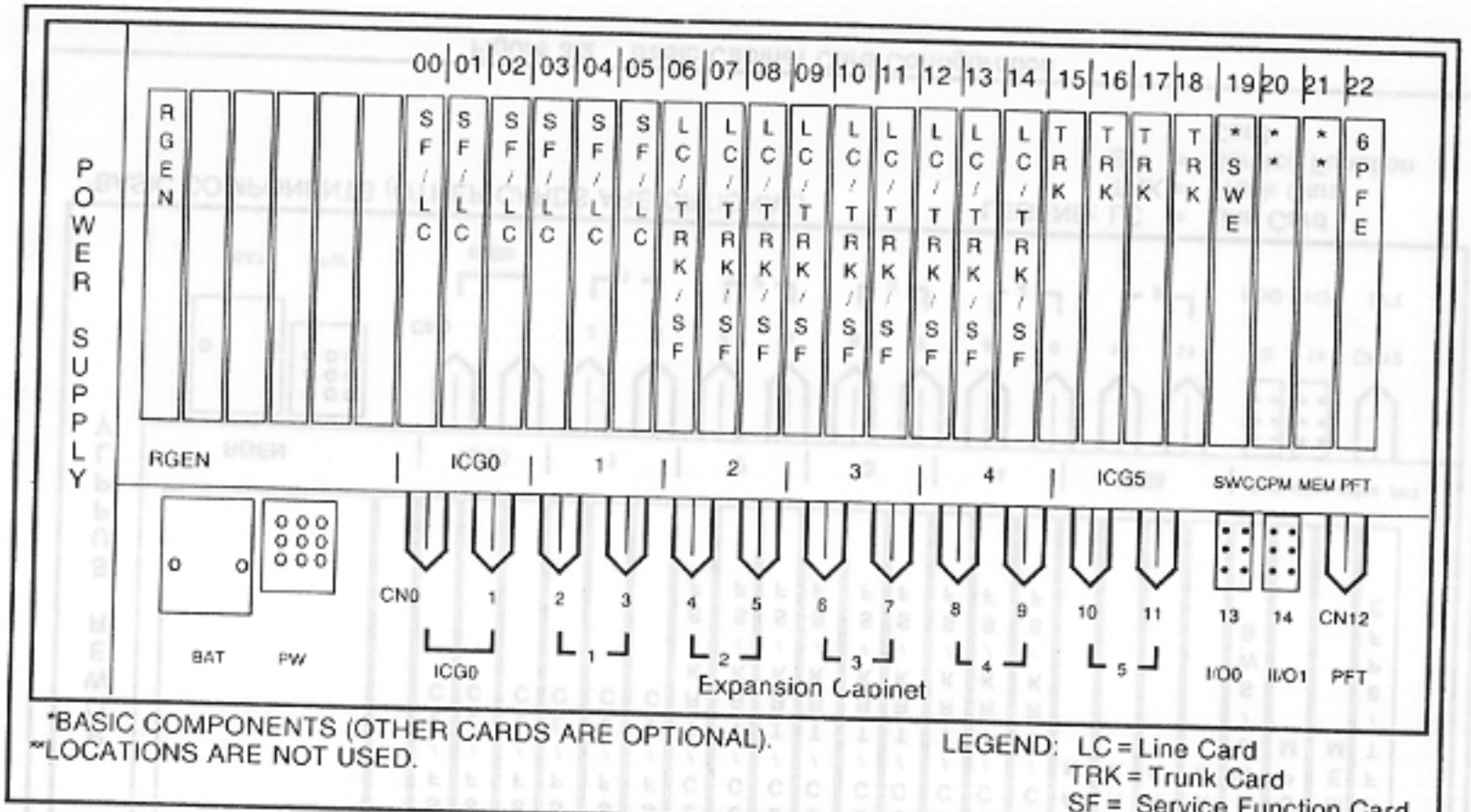

*BASIC COMPONENTS (OTHER CARDS ARE OPTIONAL).
**LOCATIONS ARE NOT USED.

LEGEND: LC = Line Card
TRK = Trunk Card
SF = Service Function Card

Figure 3.3 Expansion Cabinet Card Configuration

Table 3.5 is a matrix that describes the application-specific cards that can be used in each slot of the basic cabinet.

Table 3.5 Basic Cabinet Card Configuration Matrix

Card Group	No. 0			No. 1			No. 2			No. 3			No. 4			No. 5			
Slot	00	01	02	03	04	05	06	07	08	09	10	11	12	13	14	15	16	17	18
8EKC	X	X	X	X	X	X	X	X	X	X	X	X	X	X	X				
8SLC	X	X	X	X	X	X	X	X	X	X	X	X	X	X	X				
4DMR	X	X	X	X	X	X	X	X	X	X	X	X	X	X	X				
8DTC	X*	X	X	X*	X	X	X*	X	X	X*	X	X	X*	X	X				
4CHT	X	X	X	X	X	X	X	X	X	X	X	X	X	X	X				
RVAC	X	X	X	X	X	X	X	X	X	X	X	X	X	X	X				
4BWC							X	X	X	X	X	X	X	X	X	X	X	X	X
2TTL/ 2TTE							X	X	X	X	X	X	X	X	X	X	X	X	X

* 6 CSD telephones with Data Terminal Adapters are available for this card slot location.

Table 3.6 is a matrix that describes the application-specific cards that can be used in each slot of the expansion cabinet. Note that 8EKC and 8DTC cards cannot be used in the expansion cabinet.

Table 3.6 Expansion Cabinet Card Configuration Matrix

Card Group	No. 0			No. 1			No. 2			No. 3			No. 4			No. 5			
Slot	00	01	02	03	04	05	06	07	08	09	10	11	12	13	14	15	16	17	18
8SLC	X	X	X	X	X	X	X	X	X	X	X	X	X	X	X				
4DMR	X	X	X	X	X	X	X	X	X	X	X	X	X	X	X				
4CHT	X	X	X	X	X	X	X	X	X	X	X	X	X	X	X				
RVAC	X	X	X	X	X	X	X	X	X	X	X	X	X	X	X				
4BWC							X	X	X	X	X	X	X	X	X	X	X	X	X
2TTL/ 2TTE							X	X	X	X	X	X	X	X	X	X	X	X	X

System Cabling and Cross-Connect Wiring

3.4 This paragraph provides an overview of system cabling and cross-connect wiring. Specific references and wiring diagrams are provided for the cabinet ICGs (Interface Card Groups) and the CDF (Combined Distribution Frame).

Peripheral Installation Wiring

3.4.1 Figure 3.4 shows an example of wiring for a peripheral installation. The specific card group circuit is cabled to the CDF using a 25-pair cable. The cable wire pairs are punched down on the CDF terminal block and cross connected to the peripheral station cable. The station cable is terminated on the modular jack which connects to the peripherals equipment jack.

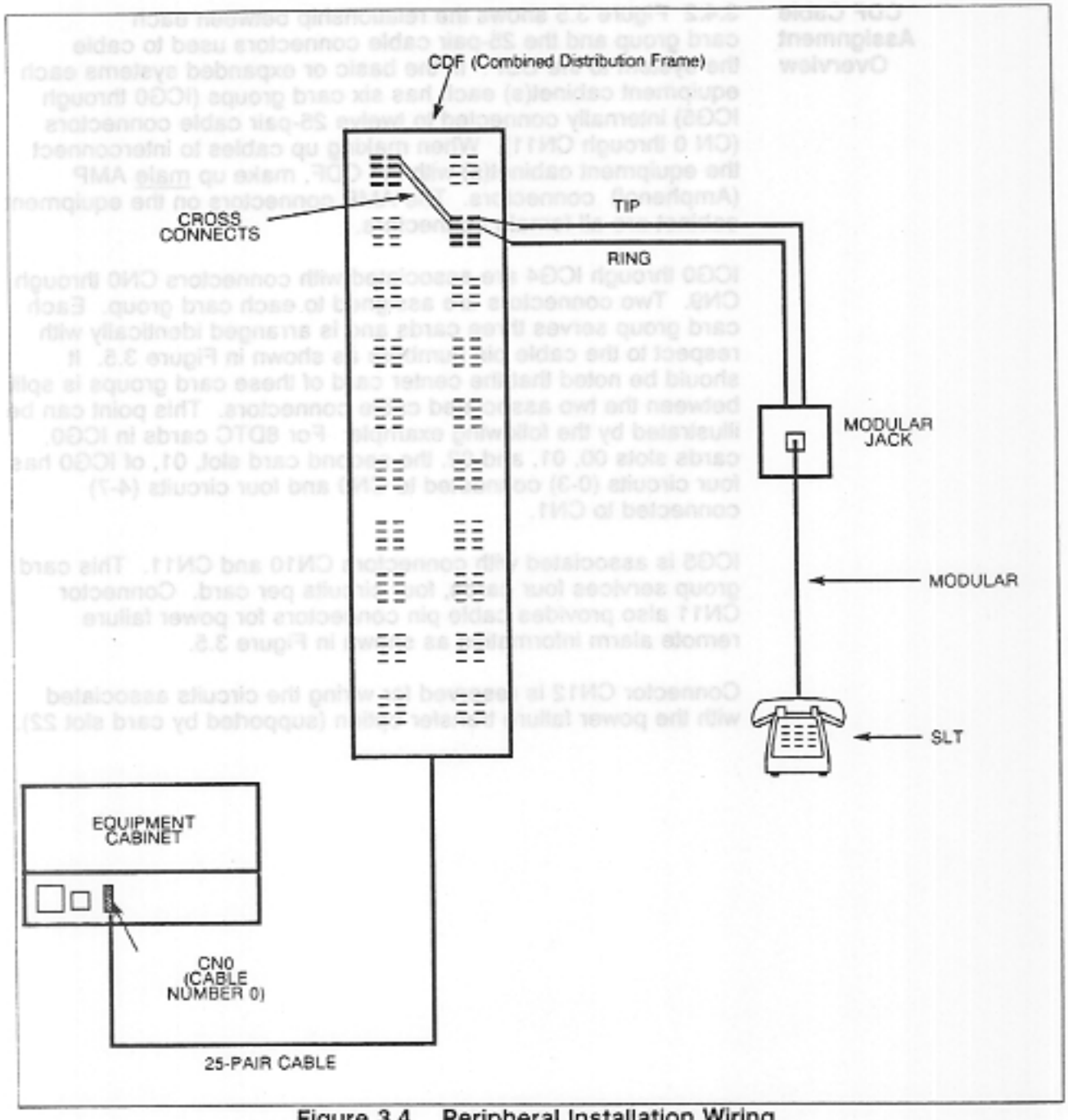

Figure 3.4 Peripheral Installation Wiring

CDF Cable Assignment Overview

3.4.2 Figure 3.5 shows the relationship between each card group and the 25-pair cable connectors used to cable the system to the CDF. In the basic or expanded systems each equipment cabinet(s) each has six card groups (ICG0 through ICG5) internally connected to twelve 25-pair cable connectors (CN 0 through CN11). When making up cables to interconnect the equipment cabinet(s) with the CDF, make up male AMP (Amphenol) connectors. The AMP connectors on the equipment cabinet are all female connectors.

ICG0 through ICG4 are associated with connectors CN0 through CN9. Two connectors are assigned to each card group. Each card group serves three cards and is arranged identically with respect to the cable pin numbers as shown in Figure 3.5. It should be noted that the center card of these card groups is split between the two associated cable connectors. This point can be illustrated by the following example: For 8DTC cards in ICG0, cards slots 00, 01, and 02, the second card slot, 01, of ICG0 has four circuits (0-3) connected to CN0 and four circuits (4-7) connected to CN1.

ICG5 is associated with connectors CN10 and CN11. This card group services four cards, four circuits per card. Connector CN11 also provides cable pin connectors for power failure remote alarm information as shown in Figure 3.5.

Connector CN12 is reserved for wiring the circuits associated with the power failure transfer option (supported by card slot 22).

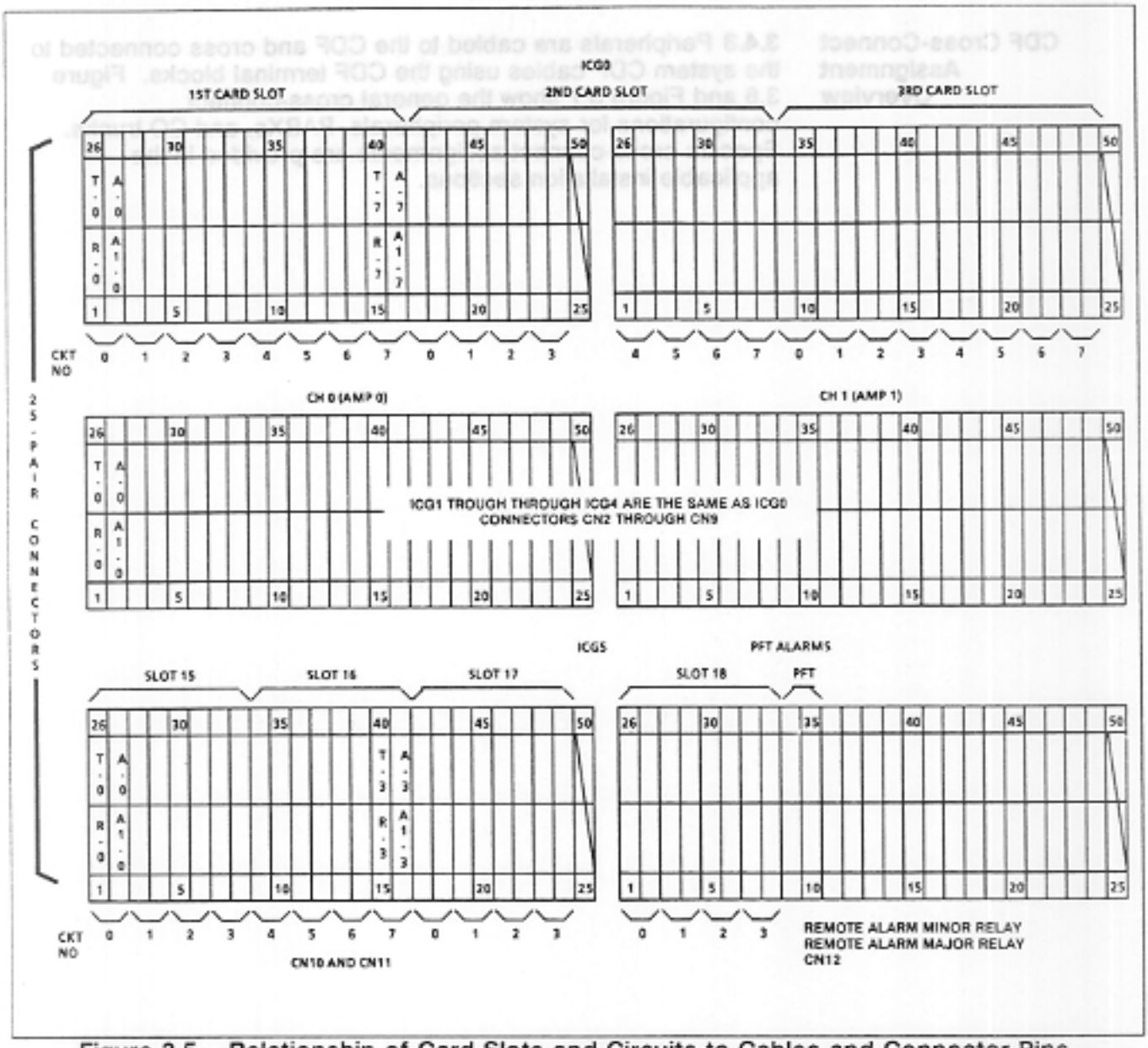

Figure 3.5 Relationship of Card Slots and Circuits to Cables and Connector Pins

CDF Cross-Connect Assignment Overview

3.4.3 Peripherals are cabled to the CDF and cross connected to the system CDF cables using the CDF terminal blocks. Figure 3.6 and Figure 3.7 show the general cross-connect configurations for system peripherals, PABXs, and CO trunks. Specific cross-connect assignments are provided in the applicable installation sections.

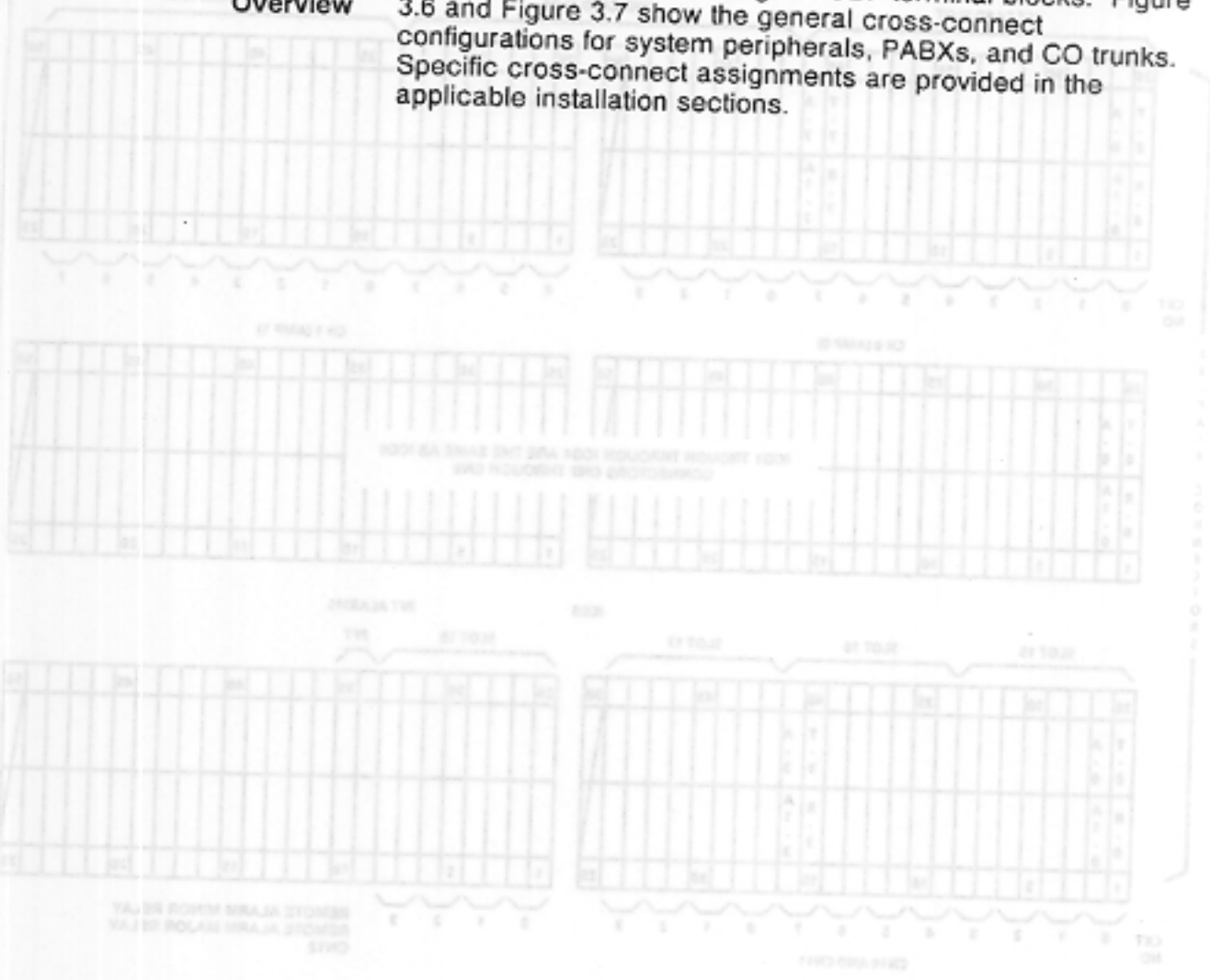

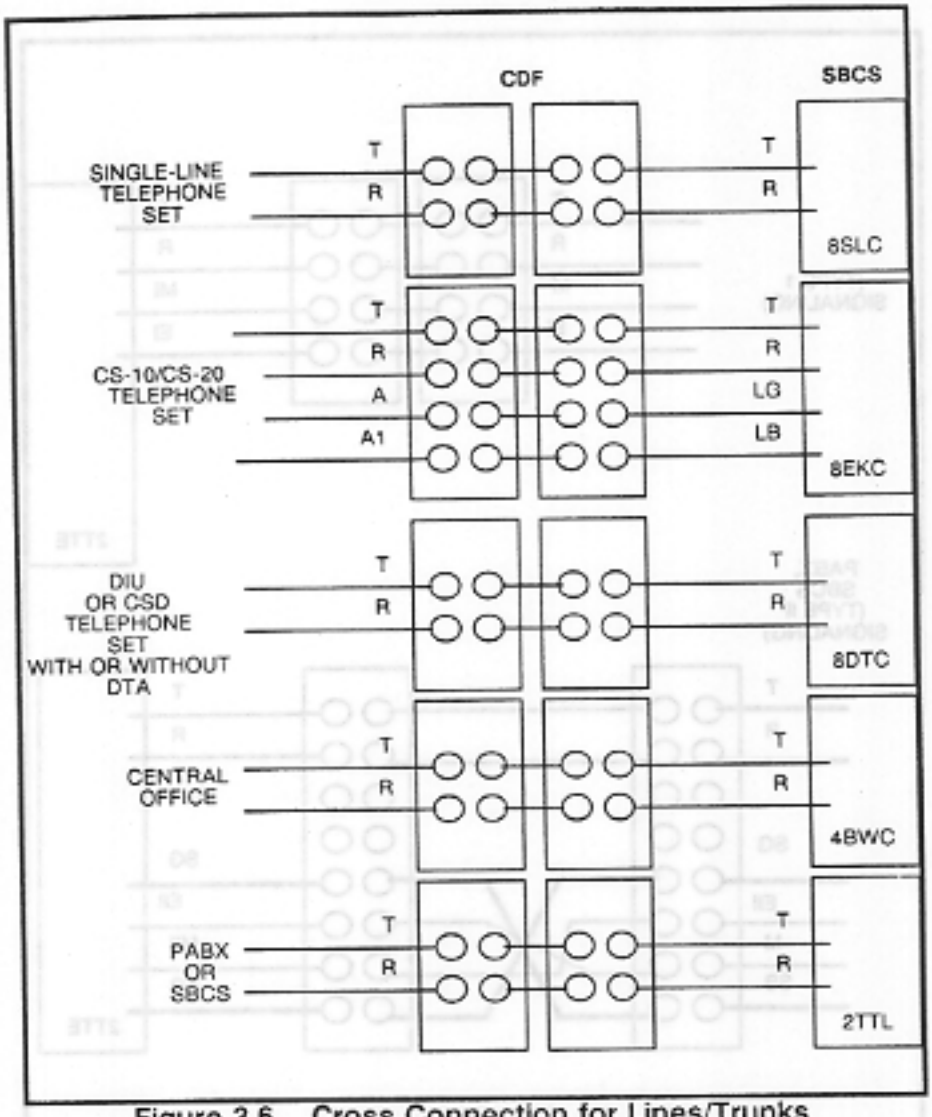

Figure 3.6 Cross Connection for Lines/Trunks

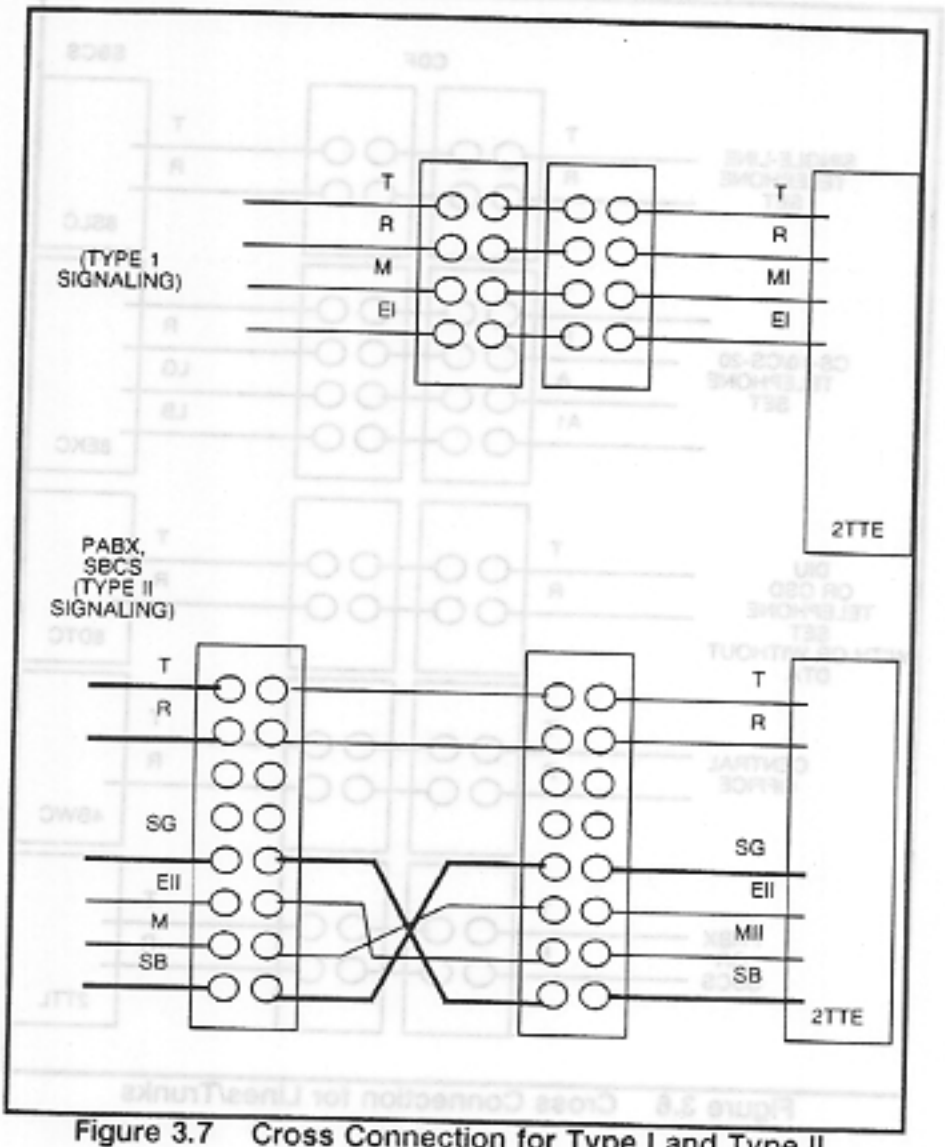

Figure 3.7 Cross Connection for Type I and Type II Signalling

VOICE APPLICATION PERIPHERAL INSTALLATION

4.0 This section describes the installation of voice-related applications. Specifically, this section covers the installation of peripherals, cards, telephone company connections, etc., with analog interfaces. The voice application of the proprietary CSD digital telephone is described in this section. Data communications applications are covered in Section 5.0. This section is organized according to the following installation groupings:

- Service Function Cards. These cards provide voice-related service functions (e.g., ringing current) to the system installation.
- Line-Side Voice Card Applications. These installations include the station-side analog applications serviced by loop signaling cards which interconnect to end-user peripherals.
- Trunk-Side Voice Card Applications. These installations include the trunk-side analog applications serviced by bothway central office trunk, loop start, and E&M Tie trunk cards which interconnect to telephone company or common carrier facilities.

Voice Service Function Card Installation

4.1 This paragraph describes the installation of cards that provide service functions to voice applications. These cards are not mandatory, but depend on the specific configuration of the system as outlined by the data base and configuration worksheet package. Installation of the following cards is covered in detail:

- RGEN (Ring Generator)
- RVAC (Recorded Voice Announcement Card)
- 6PFT/6PFE (Power Failure Transfer/Expanded)
- 4DMR (Dual Tone Multi-Frequency Receiver)

RGEN Card Installation

4.1.1 The RGEN unit provides 80V rms AC ringing voltage to called stations or key systems associated with the basic or expansion cabinet. The RGEN provides four distinct ringing patterns corresponding to the service of a call. The RGEN provides -100 VDC to power the message waiting option and/or neon lamps on SLTs (Single-Line Telephones).

The RGEN is installed as follows:

CAUTION
Ensure that the cabinet power is turned off before attempting to install the RGEN card. The RGEN card is not fuse protected and, therefore, can be damaged by insertion or removal with cabinet power ON.

RGEN Strapping

1. All RGEN cards are shipped with the message waiting option disabled. If the message waiting option is specified, it must be selected by placing the slide switch in the ON position or by cutting the strap (J1) as shown in Figure 4.1. All RGENs are shipped with the strap (J1) installed or with the slide switch set to the OFF position. To enable message waiting, cut the strap or set the switch to ON. Further data base programming is required for activation.

2. Install the RGEN in the basic or expansion cabinet slot labeled RGEN on the left-hand side of the cabinet; use caution when matching the backplane connectors and RGEN card connectors.

RVAC Option Installation

4.1.2 RVAC (Recorded Voice Announcement Card) option provides recorded voice messages. The RVAC card has an installed voice memory back-up battery to protect the messages up to two weeks in the event of a power failure. Actual loading of voice messages after system initialization is covered in Data Base TL-120301-1001. RVAC is available with Package D.

Insert the RVAC in any card slot 00 through 14. Two RVAC cards in combination with 4CHT cards can be placed in each cabinet. A single RVAC card supplies 7 four second message blocks or 28 seconds of recorded message(s).

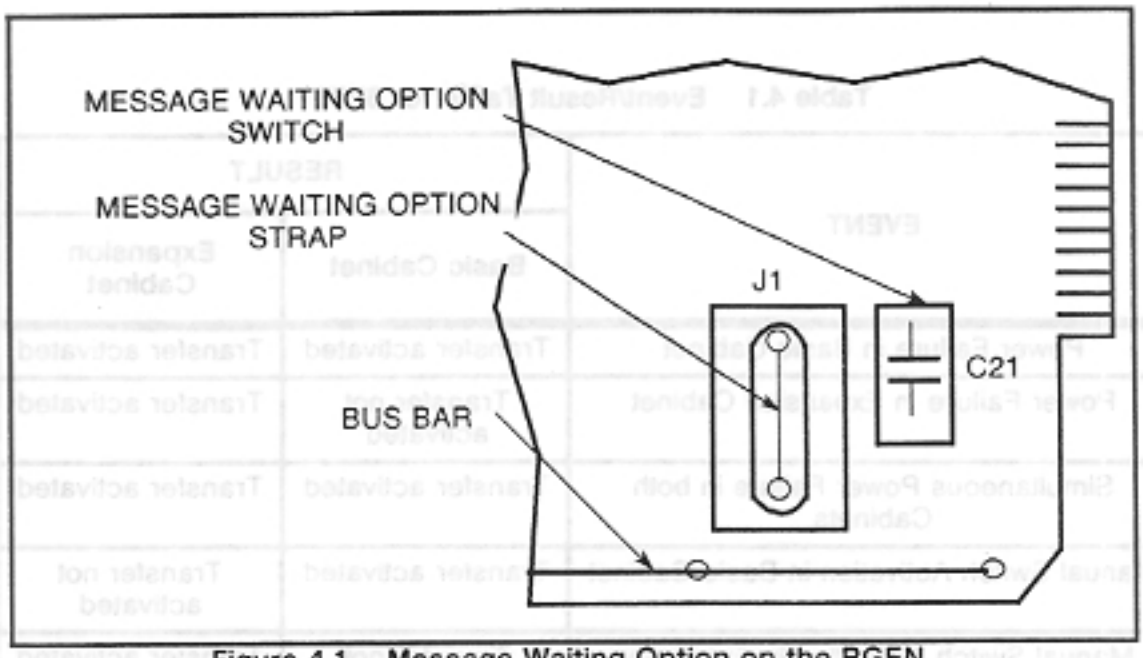

Figure 4.1 Message Waiting Option on the RGEN

Power Failure Transfer Card Installation

4.1.3 The 6PFT (Power Failure Transfer) card and 6PFE (Power Failure Transfer Expanded) card allow the direct connection of predetermined SLTs to outgoing telephone company lines during a power failure or call processing interruption. Up to six wire pairs can be served for a mix of stations/lines. The cards provide relay contact closures to signal minor or major alarms to external customer-provided devices.

The 6PFT card can only be used in the basic cabinet. The 6PFE card has a toggle switch which allows it to be used in either the basic or expansion cabinet. The expanded system requires 6PFE cards in both cabinets. The 6PFT card cannot be used in the expanded cabinet.

The station/line transfer function can be activated manually from the toggle switch on the front edge of the card. See Figure 4.2.

Table 4.1 is an event/result table which describes the basic/expansion cabinet conditions that result from power failures or activating the manual transfer switch.

Table 4.1 Event/Result Table for 6PFE

EVENT	RESULT	
	Basic Cabinet	Expansion Cabinet
Power Failure in Basic Cabinet	Transfer activated	Transfer activated
Power Failure in Expansion Cabinet	Transfer not activated	Transfer activated
Simultaneous Power Failure in both Cabinets	Transfer activated	Transfer activated
Manual Switch Activation in Basic Cabinet	Transfer activated	Transfer not activated
Manual Switch Activation in Expansion Cabinet	Transfer not activated	Transfer activated

The 6PFT/6PFE is installed as follows:

6PFT/6PFE Peripherals and Wiring

1. Install station modular connectors and wire to the CDF (Combined Distribution Frame).
2. Terminate telephone company lines on the CDF.

6PFT/6PFE Strapping

3. Position toggle switch SW 2 on the 6PFE card in the BASIC position for basic system or EXP for expanded system per Figure 4.2.
4. Position toggle switch SW1 in the AUTO position as shown in Figure 4.2 if the 6PFT/6PFE is used.
5. Insert the card in slot 22 of the basic (6PFT or 6PFE) or expansion (6PFE only) cabinet.

6PFT/6PFE CDF Cabling

6. Connect the 25-pair connector to CN12 of the basic or expansion cabinet and label/run cable to the CDF. Terminal block connection information is provided in Figure 4.3.

6PFT/6PFE Cross-Connects

7. Cross connect the Telephone Company lines and CDF cable on the CDF. A typical installation is shown in Figure 4.4. Cross-connect information for the six circuits is provided in Table 4.2.

6PFT/6PFE Alarm Connections

8. If applicable, install external alarms.

   (a) Wire alarms to the CDF.
   (b) Cross connect per Figure 4.4 using information in Table 4.2.
   (c) Optional alarm cross connects are shown in Figure 4.4 for the basic system and Figure 4.5 for the expanded system. CDF cable information is provided in Table 4.2.

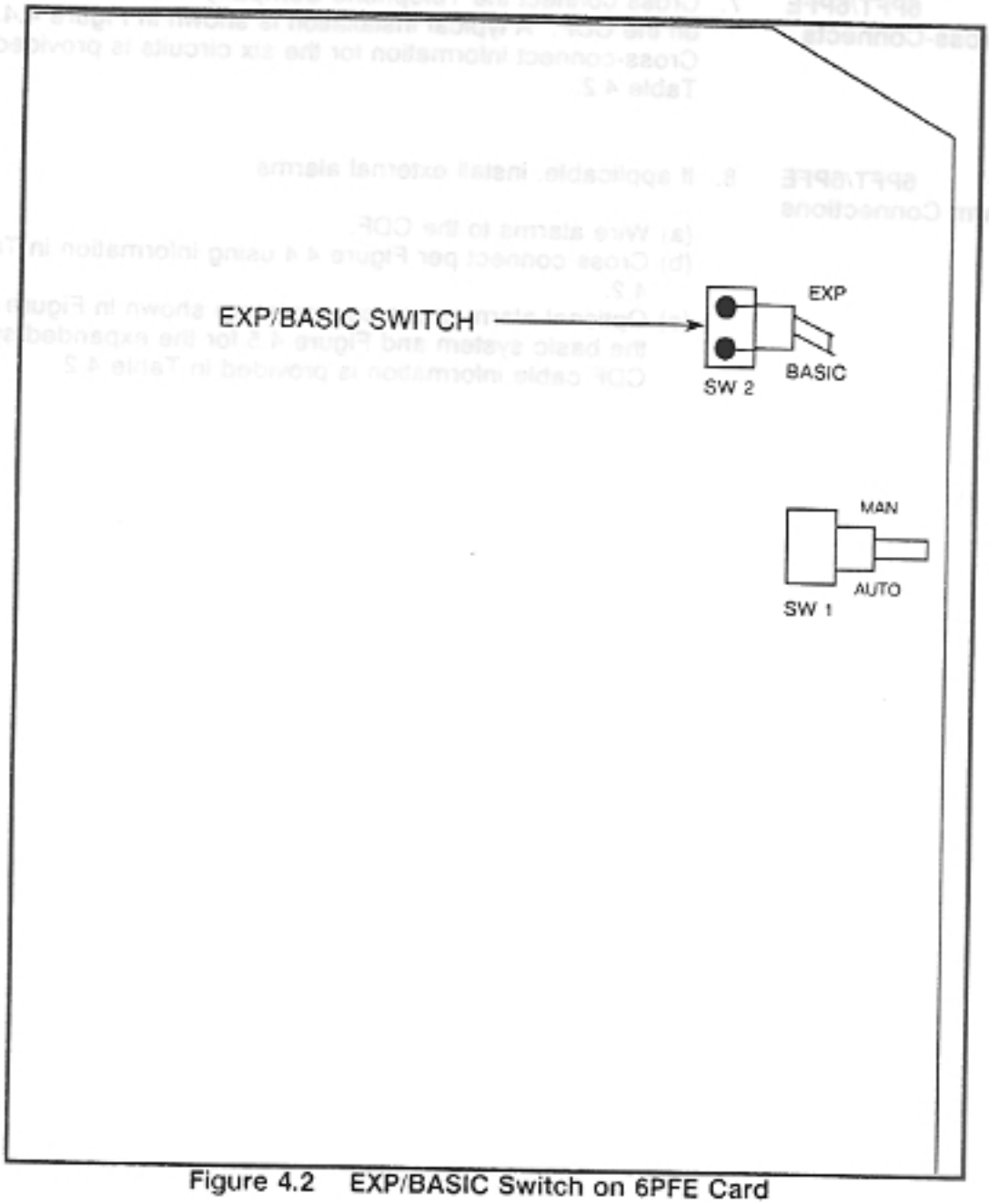

Figure 4.2 EXP/BASIC Switch on 6PFE Card

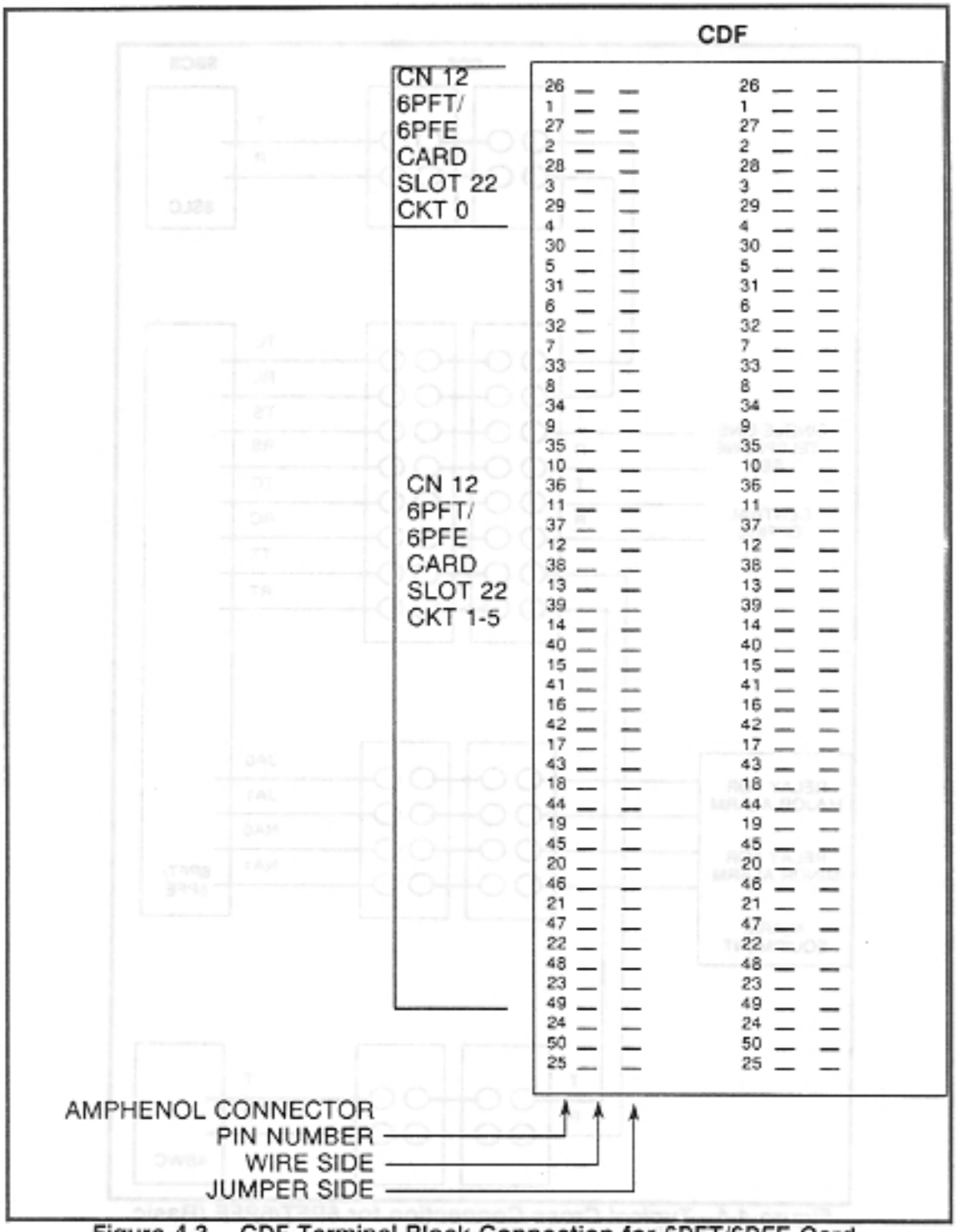

Figure 4.3 CDF Terminal Block Connection for 6PFT/6PFE Card

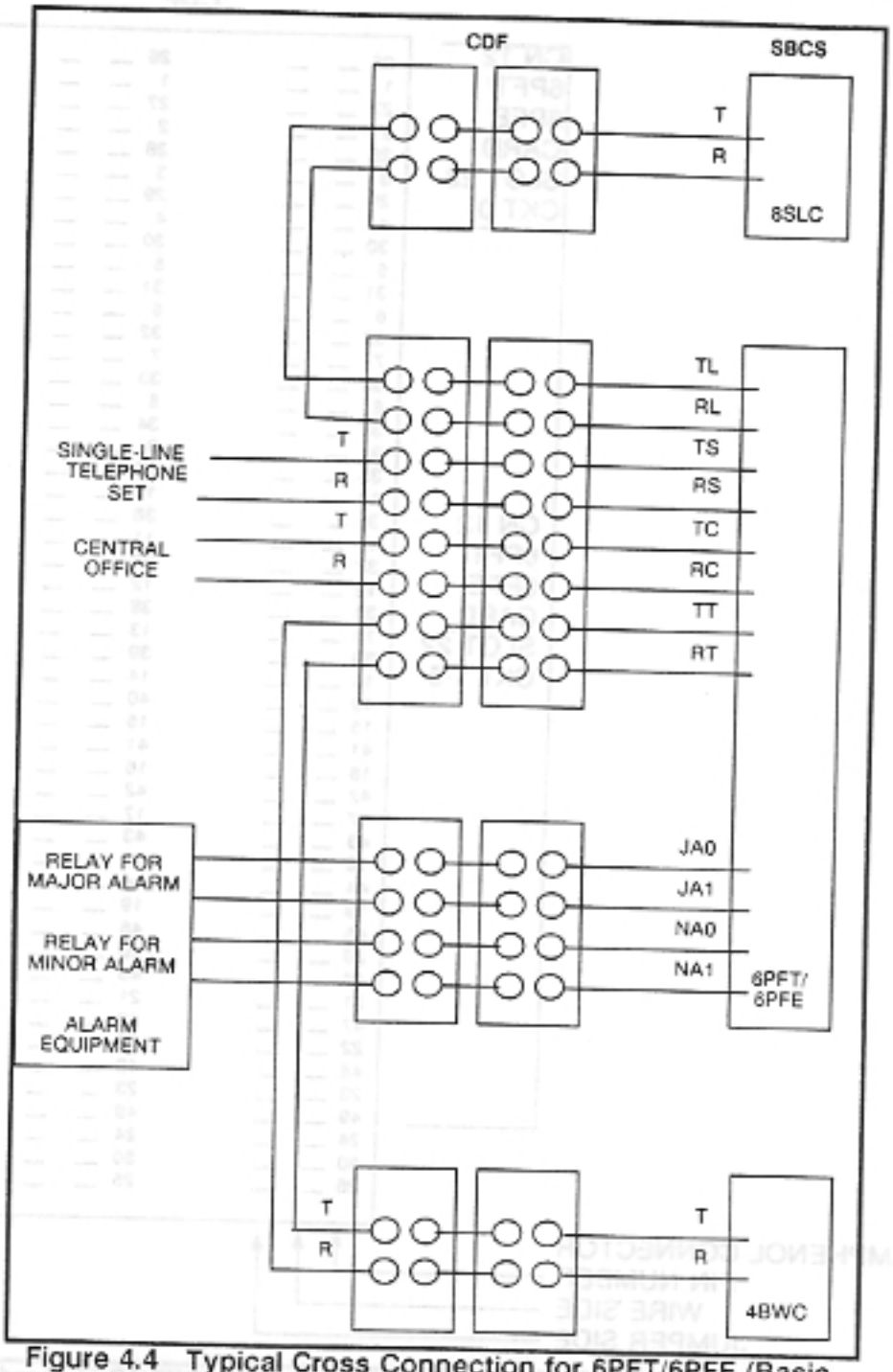

Figure 4.4 Typical Cross Connection for 6PFT/6PFE (Basic System)

NOTES:

1. Line and trunk number designations agree with data base entries.
2. 6PFT station instrument must be SLTs. Use ground START button if ground start trunks are used.

Table 4.2 **CN 12 Power Failure Transfer Cross-Connect Data for Loop Trunk**

AMP PIN NUMBER	SIGNAL NAME	CDF CABLE COLOR CODE	CIRCUIT NUMBER	CN0	CARD SLOT	DESTINATION
26	TCO	WHT-BLU	0	CN12	22	CO Line Tip
1	RCO	BLU-WHT		CN12	22	CO Line Ring
27	TTO	WHT-ORN		CN12	22	CO Trunk
2	RTO	ORN-WHT				CO Trunk
28	TSO	WHT-GRN				Telephone Set
3	RSO	GRN-WHT				Telephone Set
29	TLO	WHT-BRN				SBCS Line Ckt.
4	RLO	BRN-WHT				SBCS Line Ckt.
30	TC1	WHT-SL	1			↑
5	RC1	SL-WHT				
31	TT1	RED-BLU				Same
6	RT1	BLU-RED				as
32	TS1	RED-ORN				Circuit
7	RS1	ORN-RED				0
33	TL1	RED-GRN				↓
8	RL1	GRN-RED				
34	TC2	RED-BRN	2	CN12	22	↑
9	RC2	BRN-RED				
35	TT2	RED-SL				
10	RT2	SL-RED				
36	TS2	BLK-BLU				
11	RS2	BLU-BLK				
37	TL2	BLK-ORN				Same
12	RL2	ORN-BLK				as
38	TC3	BLK-GRN	3	CN12	22	Circuit
13	RC3	GRN-BLK				0
39	TT3	BLK-BRN				
14	RT3	BRN-BLK				
40	TS3	BLK-SL				
15	RS3	SL-BLK				
41	TL3	YEL-BLU				
16	RL3	BLU-YEL				↓
42	TC4	YEL-ORN	4			
17	RC4	ORN-YEL				↑
43	TT4	YEL-GRN				
18	RT4	GRN-YEL				
44	TS4	YEL-BRN				
19	RS4	BRN-YEL				
45	TL4	YEL-SL				Same
20	RL4	SL-YEL				as
46	TC5	VIO-BLU	5			Circuit
21	RC5	BLU-VIO				0
47	TT5	VIO-ORN				
22	RT5	ORN-VIO				
48	TS5	VIO-GRN				
23	RS5	GRN-VIO				
49	TL5	VIO-BRN				
24	RL5	BRN-VIO				↓

NOTE: Power fail alarm relays are pins 34/9 and 35/10 on CN 11.

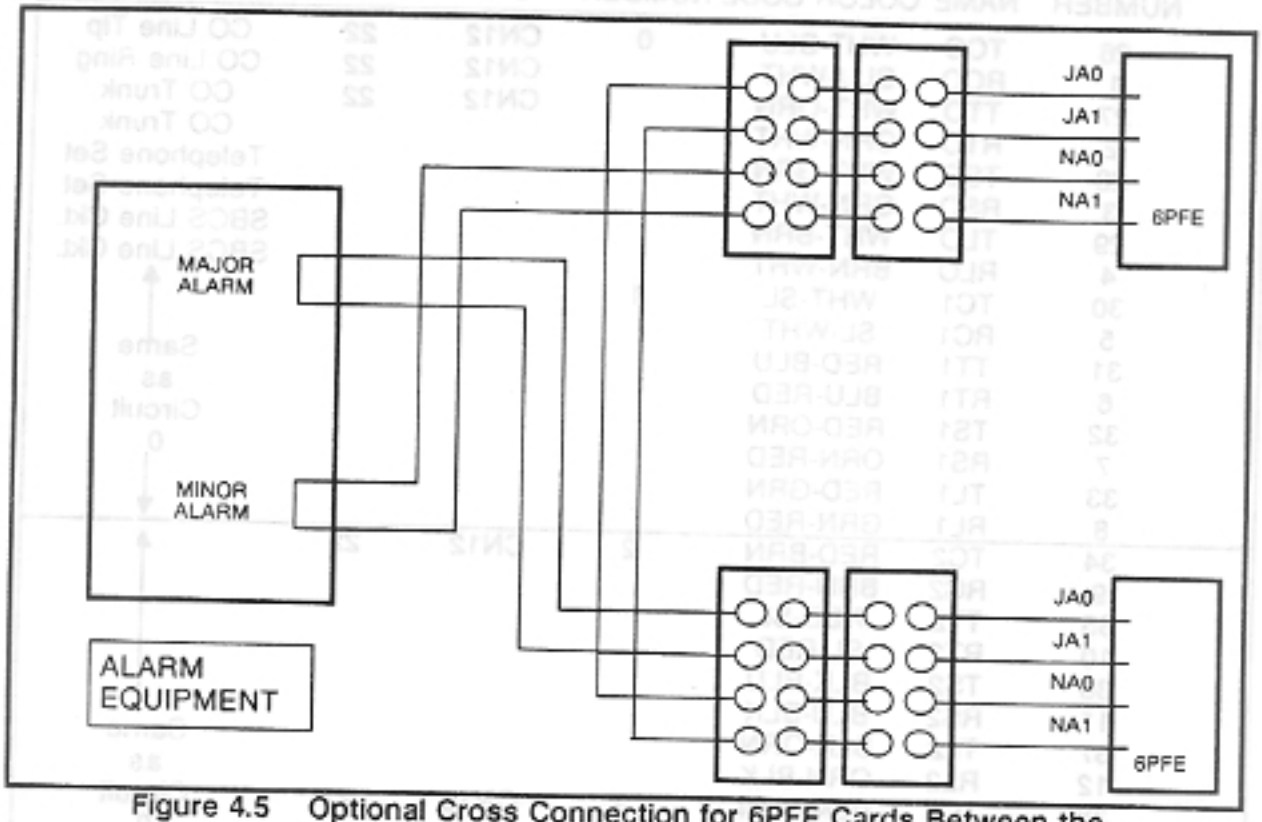

Figure 4.5 Optional Cross Connection for 6PFE Cards Between the Basic Cabinet and Expansion Cabinet

4DMR (Dual Tone Multifrequency Receiver)

The 4DMR (Dual Tone Multi-frequency Receiver) card provides DTMF receiver service for up to four simultaneous circuits.The 4DMR card converts dual tone multi-frequency signals into digital signals required by the system microprocessor.

4DMR Installation

Insert the 4DMR card(s) in slots 00 through 14 (maximum two cards per system) preferably between line and trunk card locations per data base and configuration worksheets.

Line (Station) Voice Application Installation

4.2 This paragraph describes the installation of line cards in the system. Line cards interface station sets to the system. The system utilizes three different line cards: the 8SLC (Single-Line Telephone Card), the 8EKC (Electronic Key Telephone Card), and the 8DTC (Digital Telephone Card). These cards are the system interface for both voice and data stations. The 8SLC card supports single-line telephones and analog dial-up modems etc. The 8EKC card supports EKTs (Electronic Key Telephones), CS-10s, CS-20s, Attendant Consoles and the DSS/BLF (Direct Station Selection/Busy Lamp Field) Consoles. The 8DTC card supports digital telephones, the CSD, and/or CSDs with DTAs (Data Terminal Adapters) and DIUs (Data Interface Units).

8SLC Card Application

4.2.1 The 8SLC card provides system interface to eight circuits of single-line analog station peripherals. The 8SLC supports loop start signaling over two-wire, local loop telephone cabling. Since the 8SLC card is not FCC-registered for OPX (Off-Premises Extension), off-premises station extensions requiring CO (Central Office) connections must use an OPX adapter as outlined in Appendix III.

8SLC Installation

8SLC stations are installed as follows:

1. Install peripherals and connectors (stations, modems, etc.) per manufacturer's documentation.
2. Wire the station to the CDF by running the cable to the peripheral location and installing a modular jack.
3. Insert 8SLC card(s) in slots 00 through 14 of the basic or expansion cabinet.
4. Connect the CDF cable to the cabinet and label/run to the CDF. Terminal block connection information is provided in Figure 4.6.
5. Cross connect the lines and wire the CDF cable to the CDF block. A typical installation is shown in Figure 4.7. Cross-connect information for the card is provided in Table 4.3 for CDF cables 0, 2, 4, 6, and 8; and Table 4.4 for CDF cables 1, 3, 5, 7, and 9.

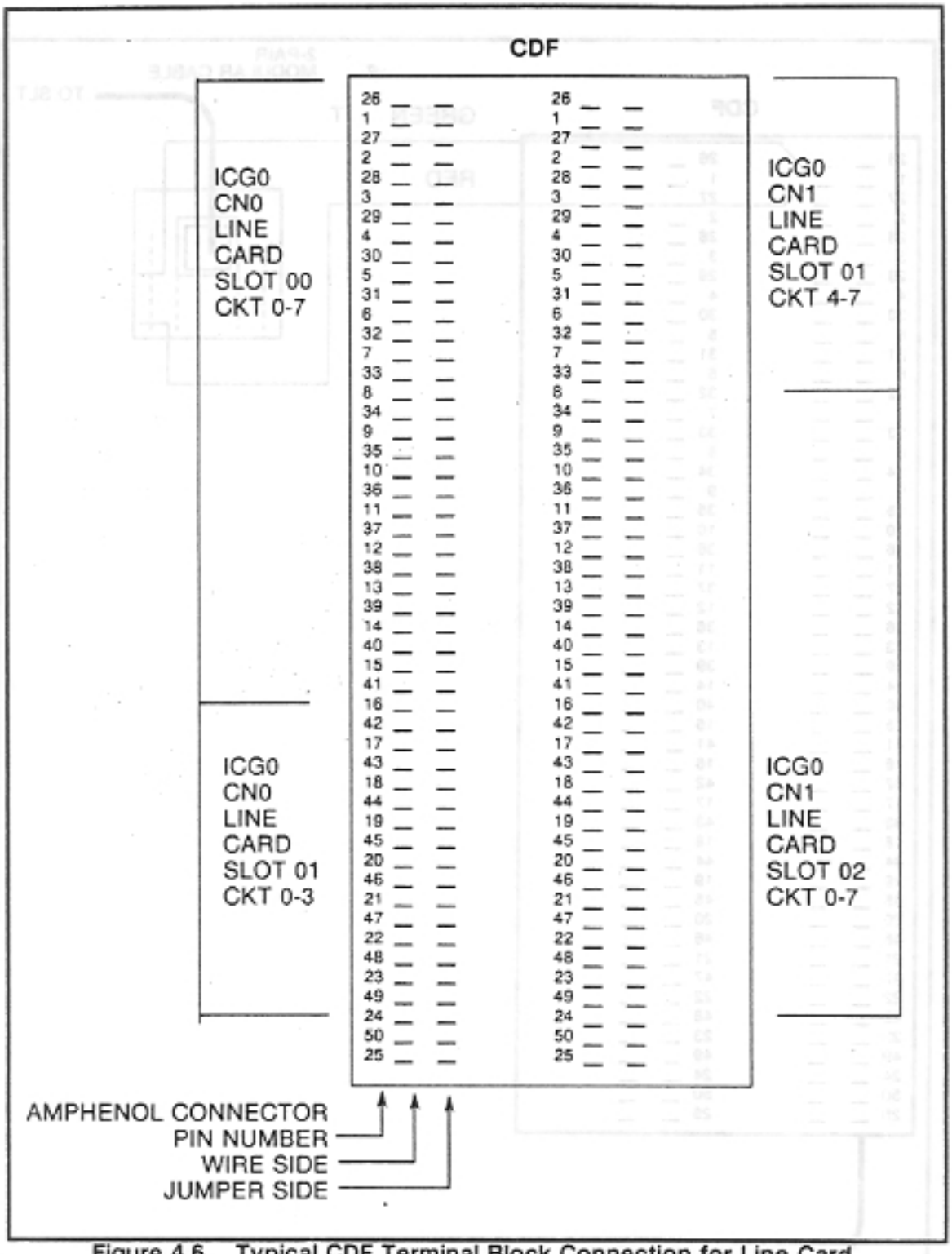

Figure 4.6 Typical CDF Terminal Block Connection for Line Card

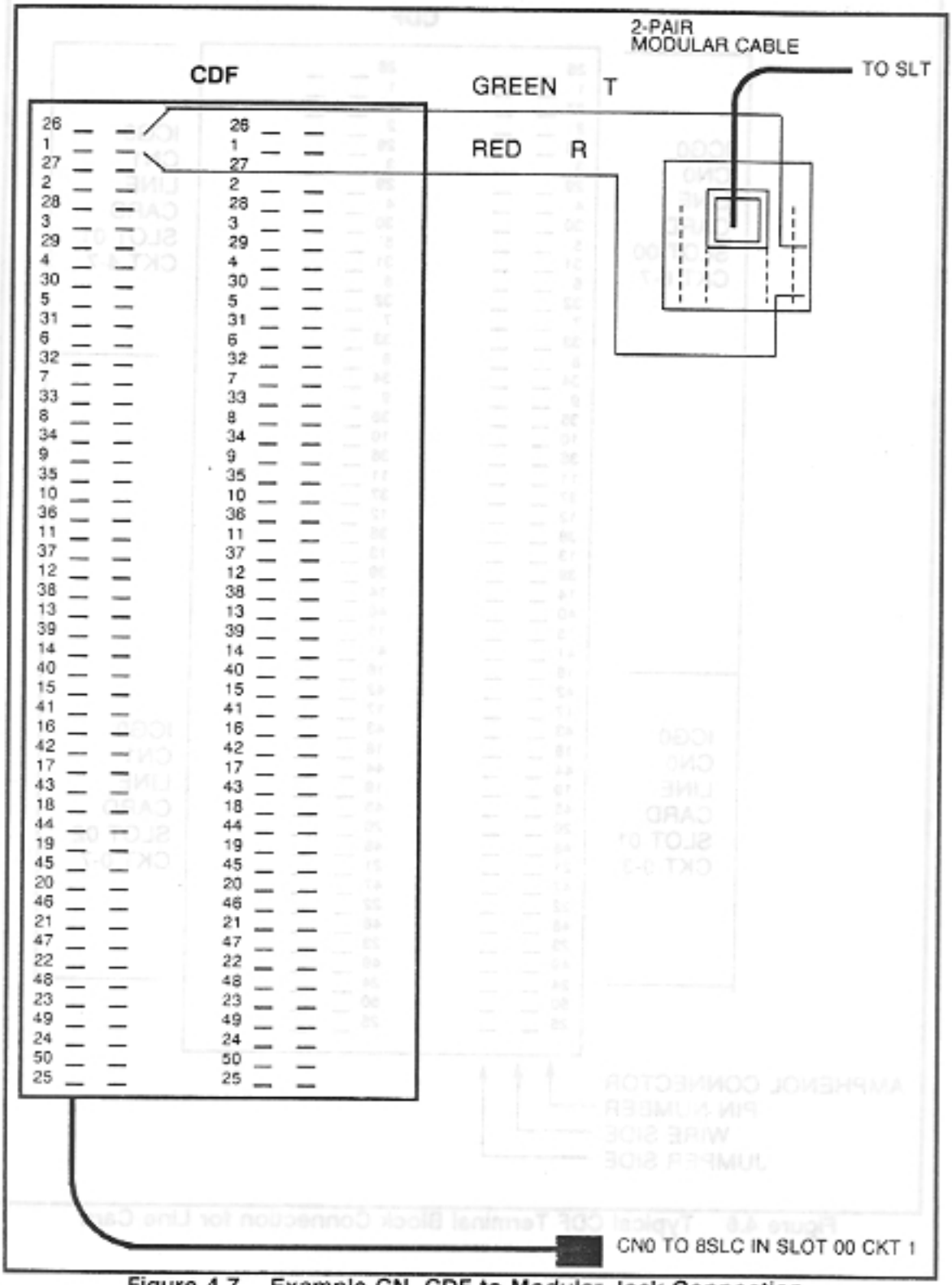

Figure 4.7 Example CN, CDF to Modular Jack Connection

Table 4.3 CN 0, 2, 4, 6, and 8 Cross-Connect Data for Line Circuits

AMP PIN NUMBER	SIGNAL NAME	CDF CABLE COLOR CODE	CIRCUIT NUMBER	CABLE/ CARD SLOT	8SLC/8DTC #LEAD NAME	8EKC LEAD NAME
26	T0	WHT-BLU	0	CN0/(00) CN2/(03) CN4/(06) CN6/(09) CN8/(12)	TIP 0	T0
1	R0	BLU-WHT			RING 0	R0
27	A0	WHT-ORN			---	LG0
2	A10	ORN-WHT			---	LB0
28	T1	WHT-GRN	1		TIP 1	T1
3	R1	GRN-WHT			RING 1	R1
29	A1	WHT-BRN			---	LG1
4	A11	BRN-WHT			---	LB1
30	T2	WHT-SL	2		TIP 2	T2
5	R2	SL-WHT			RING 2	R2
31	A2	RED-BLU			---	LG2
6	A12	BLU-RED			---	LB2
32	T3	RED-ORN	3		TIP 3	T3
7	R3	ORN-RED			RING 3	R3
33	A3	RED-GRN			---	LG3
8	A13	GRN-RED			---	LB3
34	T4	RED-BRN	4	CN0/(00) CN2/(03) CN4/(06) CN6/(09) CN8/(12)	TIP 4	T4
9	R4	BRN-RED			RING 4	R4
35	A4	RED-SL			---	LG4
10	A14	SL-RED			---	LB4
36	T5	BLK-BLU	5		TIP 5	T5
11	R5	BLU-BLK			RING 5	R5
37	A5	BLK-ORN			---	LG5
12	A15	ORN-BLK			---	LB5
38	T6	BLK-GRN	6		TIP 6	T6
13	R6	GRN-BLK			RING 6	R6
39	A6	BLK-BRN			---	LG6
14	A16	BRN-BLK			---	LB6
40	T7	BLK-SL	7		TIP 7	T7
15	R7	SL-BLK			RING 7	R7
41	A7	YEL-BLU			---	LG7
16	A17	BLU-YEL			---	LB7
42	T0	YEL-ORN	0	CN0/(01) 2 CN4/(04) 4 CN6/(07) 6 CN6/(10) 8 CN8/(13)	TIP 0	T0
17	R0	ORN-YEL			RING 0	R0
43	A0	YEL-GRN			---	LG0
18	A10	GRN-YEL			---	LB0
44	T1	YEL-BRN	1		TIP 1	T1
19	R1	BRN-YEL			RING 1	R1
45	A1	YEL-SL			---	LG1
20	A11	SL-YEL			---	LB1
46	T2	VIO-BLU	2		TIP 2	T2
21	R2	BLU-VIO			RING 2	R2
47	A2	VIO-ORN			---	LG2
22	A12	ORN-VIO			---	LB2
48	T3	VIO-GRN	3		TIP 3	T3
23	R3	GRN-VIO			RING 3	R3
49	A3	VIO-BRN			---	LG3
24	A13	BRN-VIO			---	LB3

Table 4.4 CN 1, 3, 5, 7, and 9 Cross-Connect Data for Line Circuits

AMP PIN NUMBER	SIGNAL NAME	CDF CABLE COLOR CODE	CIRCUIT NUMBER	CABLE/ CARD SLOT	8SLC/8DTC #LEAD NAME	8EKC LEAD NAME
26	T4	WHT-BLU	4		TIP 4	T4
1	R4	BLU-WHT			RING 4	R4
27	A4	WHT-ORN			---	LG4
2	A14	ORN-WHT			---	LB4
28	T5	WHT-GRN	5		TIP 5	T5
3	R5	GRN-WHT			RING 5	R5
29	A5	WHT-BRN		CN1/(01)	---	LG5
4	A15	BRN-WHT		CN3/(04)	---	LB5
30	T6	WHT-SL	6	CN5/(07)	TIP 6	T6
5	R6	SL-WHT		CN7/(10)	RING 6	R6
31	A6	RED-BLU		CN9/(13)	---	LG6
6	A16	BLU-RED			---	LB6
32	T7	RED-ORN	7		TIP 7	T7
7	R7	ORN-RED			RING 7	R7
33	A7	RED-GRN			---	LG7
8	A17	GRN-RED			---	LB7
34	T0	RED-BRN	0		TIP 0	T0
9	R0	BRN-RED			RING 0	R0
35	A0	RED-SL			---	LG0
10	A10	SL-RED			---	LB0
36	T1	BLK-BLU	1		TIP 1	T1
11	R1	BLU-BLK			RING 1	R1
37	A1	BLK-ORN		CN1/(02)	---	LG1
12	A11	ORN-BLK		CN3/(05)	---	LB1
38	T2	BLK-GRN	2	CN5/(08)	TIP 2	T2
13	R2	GRN-BLK		CN7/(11)	RING 2	R2
39	A2	BLK-BRN		CN9/(14)	---	LG2
14	A12	BRN-BLK			---	LB2
40	T3	BLK-SL	3		TIP 3	T3
15	R3	SL-BLK			RING 3	R3
41	A3	YEL-BLU			---	LG3
16	A13	BLU-YEL			---	LB3
42	T4	YEL-ORN	4		TIP 4	T4
17	R4	ORN-YEL			RING 4	R4
43	A4	YEL-GRN			---	LG4
18	A14	GRN-YEL			---	LB4
44	T5	YEL-BRN	5		TIP 5	T5
19	R5	BRN-YEL			RING 5	R5
45	A5	YEL-SL		CN1/(02)	---	LG5
20	A15	SL-YEL		CN3/(05)	---	LB5
46	T6	VIO-BLU	6	CN5/(08)	TIP 6	T6
21	R6	BLU-VIO		CN7/(11)	RING 6	R6
47	A6	VIO-ORN		CN9/(14)	---	LG6
22	A16	ORN-VIO			---	LB6
48	T7	VIO-GRN	7		TIP 7	T7
23	R7	GRN-VIO			RING 7	R7
49	A7	VIO-BRN			---	LG7
24	A17	BRN-VIO			---	LB7

8EKC Card Applications

4.2.2 The 8EKC card provides system interface for CS-10s, CS-20s, Attendant Consoles, and DSS/BLF (Direct Station Selection/Busy Lamp Field) peripherals.

8EKC Installation

8EKC cards and peripherals are installed as follows:

1. Install modular station lines on the CDF and run to the location of the peripheral(s).

   (a) CS-10 or CS-20 EKTs require four-wire 24 AWG cables with a 2000 foot maximum run.

   (b) The Attendant Console can be installed with four-wire 24 AWG cable up to 300 feet from the equipment cabinet using one port on the 8EKC card. If more distance is required, an additional wire pair using an additional card port for power must be used with a six-wire 24AWG cable for a maximum distance of 2000 feet. See Figure 4.10 for Attendant Console cross connections to the CDF.

   (c) Install appropriate four-pin or six-pin modular jacks.

8EKC CS-10/CS-20 Peripherals

2. Install the proprietary CS-10 or CS-20 four-wire EKT. If the EKT is to be wall mounted:

   (a) Attach the wall-mounted metal base to the wall. There are two screw locations as shown in Figure 4.8.

   (b) Place the telephone set on the wall-mounted metal base as shown in Figure 4.8.

   (c) Install the handset hook as shown in Figure 4.8.

8EKC Attendant Console Peripheral

The Attendant Console is available in Packages C and D.

3. Install the Attendant Console with appropriate four of six-pin or six of six pin modular line connector.

8EKC DSS/BLF Peripheral

The DSS/BLF requires a separate line circuit.

The DSS/BLF can be installed in any EKC circuit, but will automatically have a default value only if it is installed in an odd number circuit in card slot 01, paired with an EKT in the next lower even-numbered circuit. The values for all DSS/BLF Consoles can be assigned using CMC commands.

Example: The DSS/BLF is installed in circuit number 01 of card slot 01. The DSS/BLF is paired with the EKT installed in circuit number 00 of card slot 01. The DSS/BLF will assume the default values of the EKT in circuit number 00. The DSS/BLF normally requires two wire pairs. When this configuration is used, the tip and ring wire pair may be omitted. The default feature is auto intercom.

4. A DSS/BLF can be installed in two ways, it can be wall mounted or it attaches to an EKT with a metal plate .

- Wall mounting procedure

  a. Screw the wall-mounting metal base to the wall using the two wall mounting screws.

  b. Place the DSS/BLF on the wall mounting base with the four hooks. See Figure 4.8. The DSS/BLF uses the same wall mounting metal base and is mounted the same way as the EKT.

NOTE: The wall mounting base and screws are listed in the accessory list (separately ordered).

- DSS/BLF attached to an EKT procedure

  a. Attach the EKT and DSS/BLF to the metal plate. Slide the plate into the boxed areas on the bottom of both instruments.

  b. Connect the EKT to the line with the modular jack line cord.

5. Insert the 8EKC card in slots 00 through 14 of the basic cabinet only.

6. Connect the CDF cables to the cabinet and label/run to the CDF. Terminal block connection information is provided in Figure 4.6.

7. Cross connect the lines on the CDF. A typical installation is shown in Figure 4.9. The specific cross connect for the Attendant Console is shown in Figure 4.10. Cross-connect information is provided in Table 4.3 for CDF cables 0, 2, 4, 6, and 8; and Table 4.4 for CDF cables 1, 3, 5, 7, and 9.

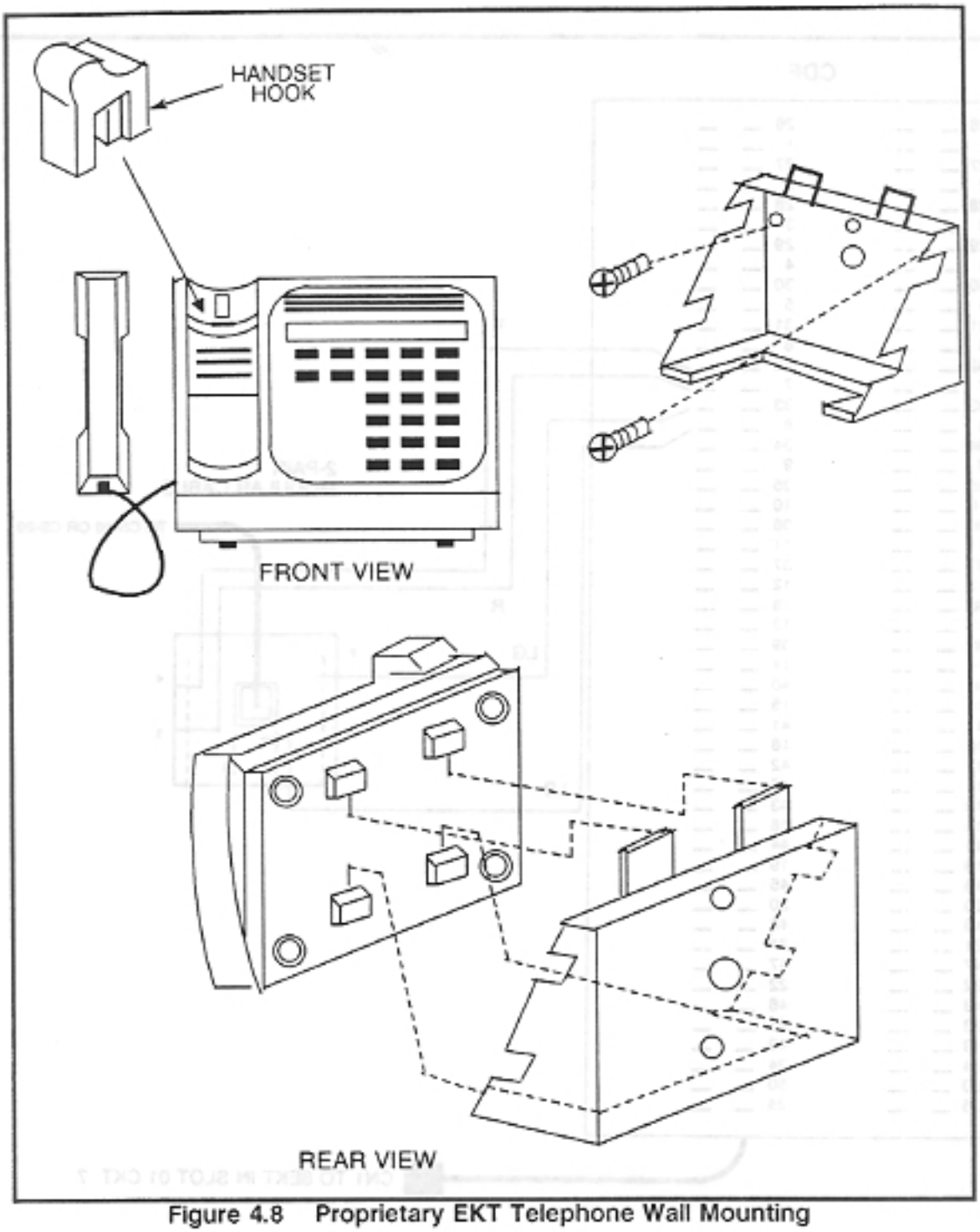

Figure 4.8 Proprietary EKT Telephone Wall Mounting

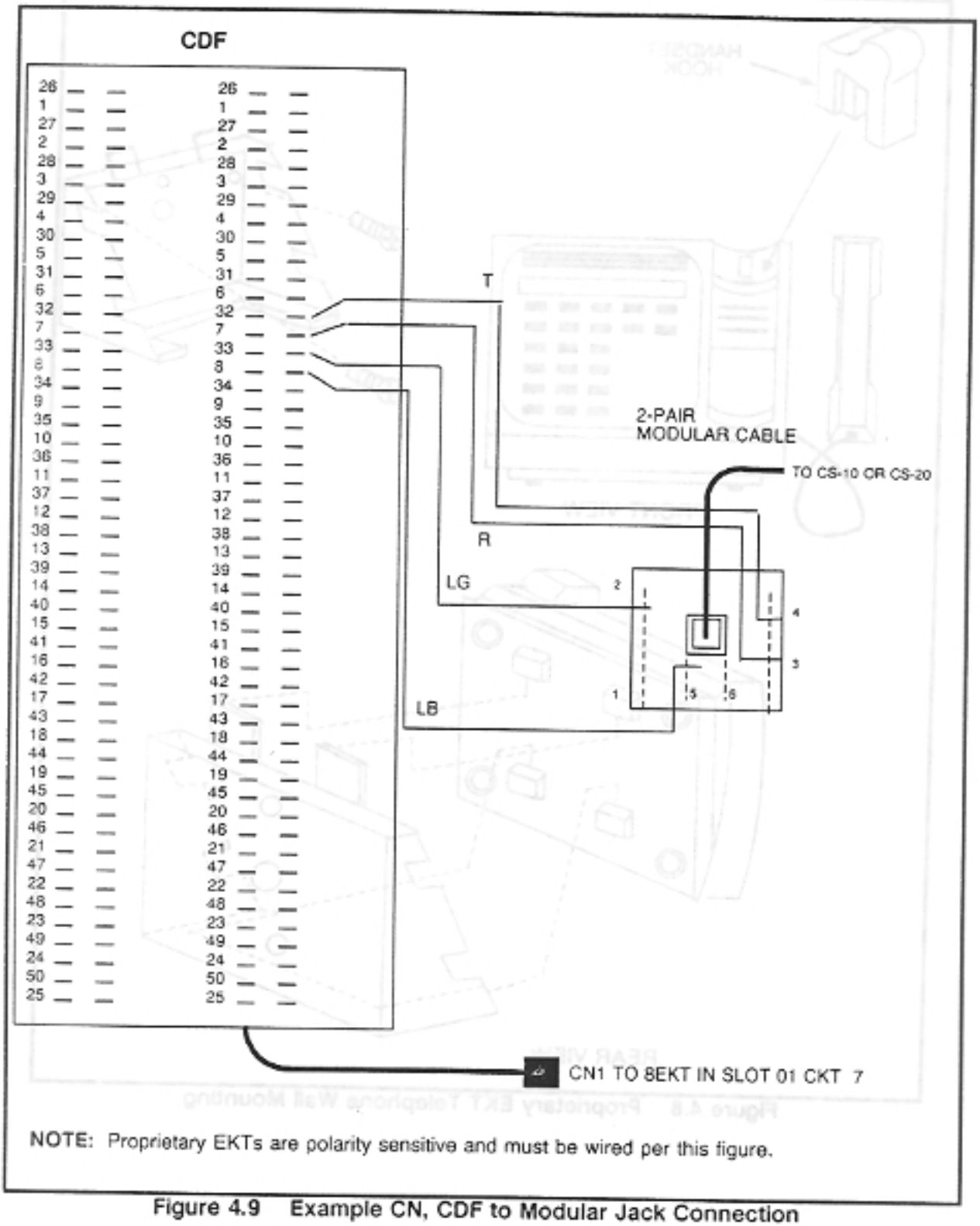

Figure 4.9 Example CN, CDF to Modular Jack Connection

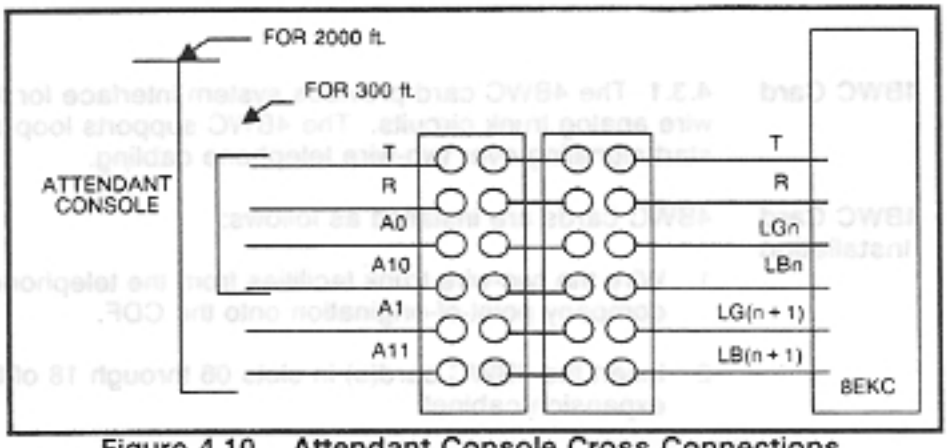

Figure 4.10 Attendant Console Cross Connections

8DTC Card Applications

4.2.3 The 8DTC provides system interface for CSDs (Digital Telephones), CSDs with DTAs (Data Terminal Adapters), and DIUs (Digital Interface Units). The 8DTC supports both voice and digital data communications (see section 5.0) over a single-wire pair.

8DTC Installation

8DTC cards and peripherals are installed as follows:

1. Wire the station cable onto the CDF, run the wire to the peripheral location, and install the modular jacks.
2. If a DTA is to be installed in the CSD, see paragraph 5.1.1, CSD/DTA Installation.
3. Insert 8DTC card(s) in slots 00 through 14 of the basic cabinet (10 cards maximum).
4. Connect the CDF cable to the cabinet and label/run to the CDF. Terminal block information is provided in Figure 4.6.
5. Cross connect the lines on the CDF. A typical example is shown in Figure 4.7. Cross-connect information is provided in Table 4.3 for CDF cables 0, 2, 4, 6, and 8; and Table 4.4 for CDF cables 1, 3, 5, 7, and 9.

Trunk (Central Office) Side Voice Application Installation

4.3 This paragraph describes the installation of trunk applications using analog interfaces. These applications generally interconnect the system with PABXs and central office trunk connections using loop and E&M type signaling.

Specifically, this paragraph covers applications serviced by the following cards:

- 4BWC (Central Office Bothway Trunk) card
- 2TTE (E&M Tie Trunk) card
- 2TTL (Loop Dial Tie Trunk) card

4BWC Card

4.3.1 The 4BWC card provides system interface for four two-wire analog trunk circuits. The 4BWC supports loop or ground start signaling over two-wire telephone cabling.

4BWC Card Installation

4BWC cards are installed as follows:

1. Wire the two-wire trunk facilities from the telephone company point-of-origination onto the CDF.
2. Insert the 4BWC card(s) in slots 06 through 18 of the basic or expansion cabinet.
3. Connect the CDF cable to the cabinet and label/run to the CDF. Terminal block connection information is provided in Figure 4.11.
4. Cross connect the lines on the CDF. Cross-connect information is provided in Table 4.5 for CDF cables 4, 6, and 8; Table 4.6 for CDF cables 5, 7, and 9; Table 4.7 for CDF cable 10; and Table 4.8 for CDF cable 11.

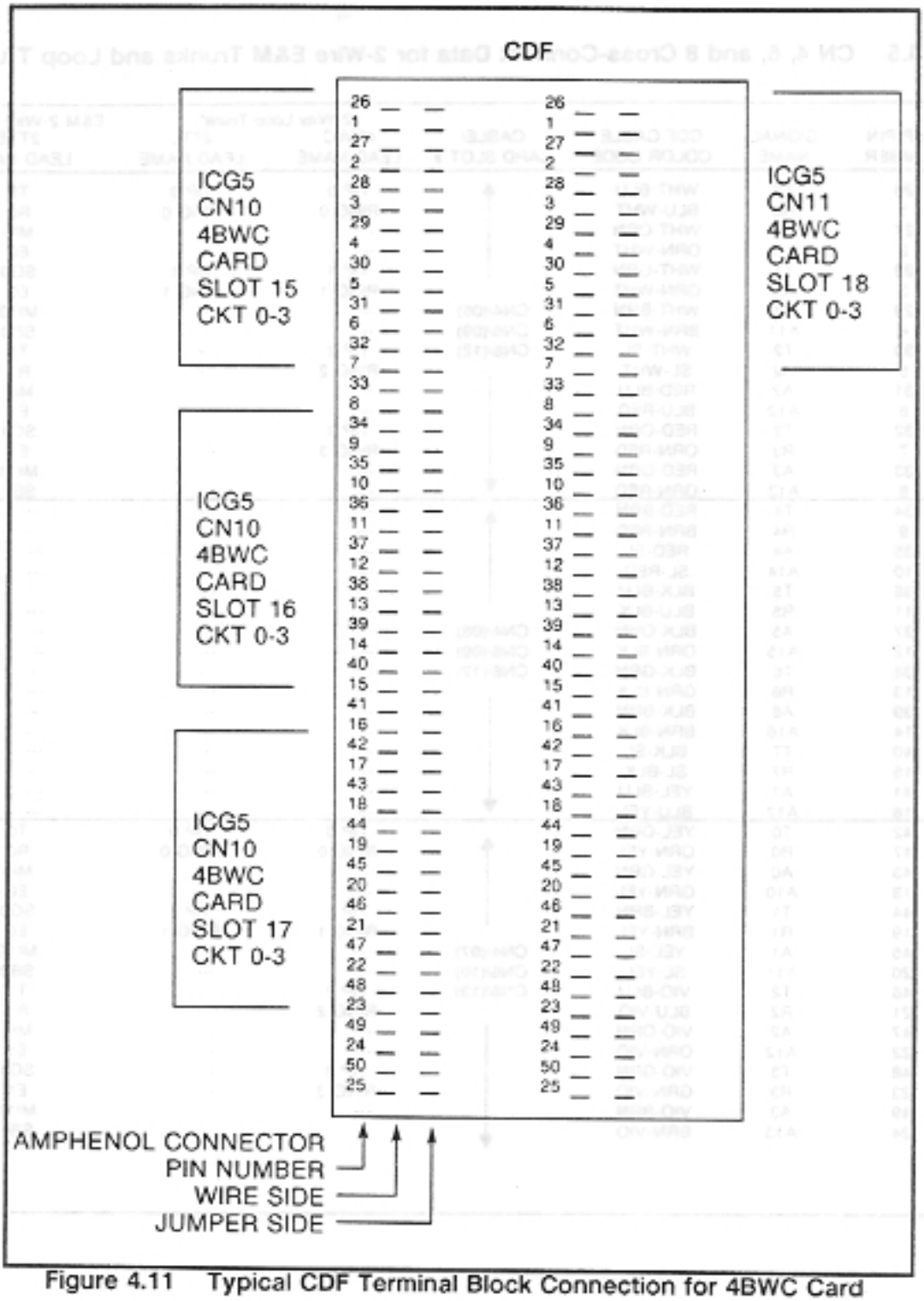

Figure 4.11 Typical CDF Terminal Block Connection for 4BWC Card

Table 4.5 CN 4, 6, and 8 Cross-Connect Data for 2-Wire E&M Trunks and Loop Trunks

AMP PIN NUMBER	SIGNAL NAME	CDF CABLE COLOR CODE	CABLE/ CARD SLOT #	2-Way Loop Trunk* 4BWC LEAD NAME	2-Way Loop Trunk* 2TTL LEAD NAME	E&M 2-Wire Trunk** 2TTE LEAD NAME
26	T0	WHT-BLU	CN4/(06) CN6/(09) CN8/(12)	TIP 0	TIP 0	T0
1	R0	BLU-WHT		RING 0	RING 0	R0
27	A0	WHT-ORN		---	---	MI0
2	A10	ORN-WHT		---	---	E0
28	T1	WHT-GRN		TIP 1	TIP 1	SG0
3	R1	GRN-WHT		RING 1	RING 1	E0
29	A1	WHT-BRN		---	---	MI10
4	A11	BRN-WHT		---	---	SB0
30	T2	WHT-SL		TIP 2	---	T1
5	R2	SL-WHT		RING 2	---	R1
31	A2	RED-BLU		---	---	MI1
6	A12	BLU-RED		---	---	E1
32	T3	RED-ORN		TIP 3	---	SG1
7	R3	ORN-RED		RING 3	---	E1
33	A3	RED-GRN		---	---	MI11
8	A13	GRN-RED		---	---	SB1
34	T4	RED-BRN	CN4/(06) CN6/(09) CN8/(12)	---	---	---
9	R4	BRN-RED		---	---	---
35	A4	RED-SL		---	---	---
10	A14	SL-RED		---	---	---
36	T5	BLK-BLU		---	---	---
11	R5	BLU-BLK		---	---	---
37	A5	BLK-ORN		---	---	---
12	A15	ORN-BLK		---	---	---
38	T6	BLK-GRN		---	---	---
13	R6	GRN-BLK		---	---	---
39	A6	BLK-BRN		---	---	---
14	A16	BRN-BLK		---	---	---
40	T7	BLK-SL		---	---	---
15	R7	SL-BLK		---	---	---
41	A7	YEL-BLU		---	---	---
16	A17	BLU-YEL		---	---	---
42	T0	YEL-ORN	CN4/(07) CN6/(10) CN8/(13)	TIP 0	TIP 0	T0
17	R0	ORN-YEL		RING 0	RING 0	R0
43	A0	YEL-GRN		---	---	MI0
18	A10	GRN-YEL		---	---	E0
44	T1	YEL-BRN		TIP 1	TIP 1	SG0
19	R1	BRN-YEL		RING 1	RING 1	E0
45	A1	YEL-SL		---	---	MI10
20	A11	SL-YEL		---	---	SB0
46	T2	VIO-BLU		TIP 2	---	T1
21	R2	BLU-VIO		RING 2	---	R1
47	A2	VIO-ORN		---	---	MI1
22	A12	ORN-VIO		---	---	E1
48	T3	VIO-GRN		TIP 3	---	SG1
23	R3	GRN-VIO		RING 3	---	E1
49	A3	VIO-BRN		---	---	MI11
24	A13	BRN-VIO		---	---	SB1

* Line and trunk number designations agree with data base entries.
** Both E&M Type I and Type II trunks are listed in this column.

Table 4.6 CN 5, 7, and 9 Cross-Connect Data for 2-Wire E&M Trunks and Loop Trunks

AMP PIN NUMBER	SIGNAL NAME	CDF CABLE COLOR CODE	CABLE/ CARD SLOT #	2-Way Loop Trunk* 4BWC LEAD NAME	2-Way Loop Trunk* 2TTL LEAD NAME	E&M 2-WireTrunk** 2TTE LEAD NAME
26	T4	WHT-BLU		---	---	---
1	R4	BLU-WHT		---	---	---
27	A4	WHT-ORN		---	---	---
2	A14	ORN-WHT		---	---	---
28	T5	WHT-GRN		---	---	---
3	R5	GRN-WHT		---	---	---
29	A5	WHT-BRN	CN5/(07)	---	---	---
4	A15	BRN-WHT	CN7/(10)	---	---	---
30	T6	WHT-SL	CN9/(13)	---	---	---
5	R6	SL-WHT		---	---	---
31	A6	RED-BLU		---	---	---
6	A16	BLU-RED		---	---	---
32	T7	RED-ORN		---	---	---
7	R7	ORN-RED		---	---	---
33	A7	RED-GRN		---	---	---
8	A17	GRN-RED		---	---	---
34	T0	RED-BRN		TIP 0	TIP 0	T0
9	R0	BRN-RED		RING 0	RING 0	R0
35	A0	RED-SL		---	---	MI0
10	A10	SL-RED		---	---	E0
36	T1	BLK-BLU		TIP 1	TIP 1	SG0
11	R1	BLU-BLK		RING 1	RING 1	E0
37	A1	BLK-ORN	CN5/(08)	---	---	MI10
12	A11	ORN-BLK	CN7/(11)	---	---	SB0
38	T2	BLK-GRN	CN9/(14)	TIP 2	---	T1
13	R2	GRN-BLK		RING 2	---	R1
39	A2	BLK-BRN		---	---	MI1
14	A12	BRN-BLK		---	---	E1
40	T3	BLK-SL		TIP 3	---	SG1
15	R3	SL-BLK		RING 3	---	E1
41	A3	YEL-BLU		---	---	MI11
16	A13	BLU-YEL		---	---	SB1
42	T4	YEL-ORN		---	---	---
17	R4	ORN-YEL		---	---	---
43	A4	YEL-GRN		---	---	---
18	A14	GRN-YEL		---	---	---
44	T5	YEL-BRN		---	---	---
19	R5	BRN-YEL		---	---	---
45	A5	YEL-SL	CN5/(08)	---	---	---
20	A15	SL-YEL	CN7/(11)	---	---	---
46	T6	VIO-BLU	CN9/(14)	---	---	---
21	R6	BLU-VIO		---	---	---
47	A6	VIO-ORN		---	---	---
22	A16	ORN-VIO		---	---	---
48	T7	VIO-GRN		---	---	---
23	R7	GRN-VIO		---	---	---
49	A7	VIO-BRN		---	---	---
24	A17	BRN-VIO		---	---	---

* Line and trunk number designations agree with data base entries.
** Both E&M Type I and Type II trunks are listed in this column.

Table 4.7 CN 10 Cross-Connect Data for 2-Wire E&M Trunks and Loop Trunks (Basic and Expanded)

AMP PIN NUMBER	SIGNAL NAME	CDF CABLE COLOR CODE	CABLE/ CARD SLOT #	2-Way Loop Trunk* 48WC LEAD NAME	2-Way Loop Trunk* 2TTL LEAD NAME	E&M 2-Wire Trunk** 2TTE LEAD NAME
26	T0	WHT-BLU	CN10/(15)	TIP 0	TIP 0	T0
1	R0	BLU-WHT		RING 0	RING 0	R0
27	A0	WHT-ORN		---	---	MI0
2	A10	ORN-WHT		---	---	E0
28	T1	WHT-GRN		TIP 1	TIP 1	SG0
3	R1	GRN-WHT		RING 1	RING 1	E0
29	A1	WHT-BRN		---	---	MI10
4	A11	BRN-WHT		---	---	SB0
30	T2	WHT-SL		TIP 2	---	T1
5	R2	SL-WHT		RING 2	---	R1
31	A2	RED-BLU		---	---	MI1
6	A12	BLU-RED		---	---	E1
32	T3	RED-ORN		TIP 3	---	SG1
7	R3	ORN-RED		RING 3	---	E1
33	A3	RED-GRN		---	---	MI11
8	A13	GRN-RED		---	---	SB1
34	T4	RED-BRN	CN10/(16)	TIP 0	TIP 0	T0
9	R4	BRN-RED		RING 0	RING 0	R0
35	A4	RED-SL		---	---	MI0
10	A14	SL-RED		---	---	E0
36	T5	BLK-BLU		TIP 1	TIP 1	SG0
11	R5	BLU-BLK		RING 1	---	E0
37	A5	BLK-ORN		---	RING 1	MI10
12	A15	ORN-BLK		---	---	SB0
38	T6	BLK-GRN		TIP 2	---	T1
13	R6	GRN-BLK		RING 2	---	R1
39	A6	BLK-BRN		---	---	MI1
14	A16	BRN-BLK		---	---	E1
40	T7	BLK-SL		TIP 3	---	SG1
15	R7	SL-BLK		RING 3	---	E1
41	A7	YEL-BLU		---	---	MI11
16	A17	BLU-YEL		---	---	SB1
42	T0	YEL-ORN	CN10/(17)	TIP 0	TIP 0	T0
17	R0	ORN-YEL		RING 0	RING 0	R0
43	A0	YEL-GRN		---	---	MI0
18	A10	GRN-YEL		---	---	E0
44	T1	YEL-BRN		TIP 1	TIP 1	SG0
19	R1	BRN-YEL		RING 1	RING 1	E0
45	A1	YEL-SL		---	---	MI10
20	A11	SL-YEL		---	---	SB0
46	T2	VIO-BLU		TIP 2	---	T1
21	R2	BLU-VIO		RING 2	---	R1
47	A2	VIO-ORN		---	---	MI1
22	A12	ORN-VIO		---	---	E1
48	T3	VIO-GRN		TIP 3	---	SG1
23	R3	GRN-VIO		RING 3	---	E1
49	A3	VIO-BRN		---	---	MI11
24	A13	BRN-VIO		---	---	SB1

* Line and trunk number designations agree with data base entries.
** Both E&M Type I and Type II trunks are listed in this column.

Table 4.8 CN 11 Cross-Connect Data for 2-Wire E&M Trunks, Loop Trunks, and 6PFT/6PFE Cards (Basic and Expanded)

AMP PIN NUMBER	SIGNAL NAME	CDF CABLE COLOR CODE	CABLE/ CARD SLOT #	2-Way Loop Trunk* 4BWC LEAD NAME	2-Way Loop Trunk* 2TTL LEAD NAME	E&M 2-Wire Trunk** 2TTE LEAD NAME
26	T0	WHT-BLU	CN11/(18)	TIP 0	TIP 0	T0
1	R0	BLU-WHT		RING 0	RING 0	R0
27	A0	WHT-ORN		---	---	M10
2	A10	ORN-WHT		---	---	E0
28	T1	WHT-GRN		TIP 1	TIP 1	SG0
3	R1	GRN-WHT		RING 1	RING 1	E0
29	A1	WHT-BRN		---	---	MI10
4	A11	BRN-WHT		---	---	SB0
30	T2	WHT-SL		TIP 2	---	T1
5	R2	SL-WHT		RING 2	---	R1
31	A2	RED-BLU		---	---	MI1
6	A12	BLU-RED		---	---	E1
32	T3	RED-ORN		TIP 3	---	SG1
7	R3	ORN-RED		RING 3	---	E1
33	A3	RED-GRN		---	---	MI11
8	A13	GRN-RED		---	---	SB1
			BASIC			
34	JA0	RED-BRN	CN11/(22) (6PFT/6PFE)	JA0	REMOTE ALARM	-MAJOR (or
9	JA1	BRN-RED		JA1	EXPANSION	-JA 0/1)
35	NA0	RED-SL		NA0	REMOTE ALARM	-MINOR
10	NA1	SL-RED		NA1	REMOTE ALARM	-MINOR
			EXPANSION			
34	JA0	RED-BRN	CN11/(22) (6PFT/6PFE)	JA0	REMOTE ALARM	-MAJOR
9	JA1	BRN-RED		JA1	REMOTE ALARM	-MAJOR
35	NA1	RED-SL		NA0	REMOTE ALARM	-MINOR (or
10	NA1	SL-RED		NA1	BASIC	-JA 0/1)
36						
•						
•						
•						
•						
•			(NOT USED)			
•						
•						
•						
•						
•						
25						

* Line and trunk number designations agree with data base entries.
** Both E&M Type I and Type II trunks are listed in this column.

2TTE Card

4.3.2 The 2TTE card provides system interface with two E&M signaling circuits used to interconnect Tie trunks and DID terminals. The 2TTE supports trunks using both Type I and Type II E&M signaling. Type I E&M signaling uses two leads (E and M), while Type II E&M signaling uses four leads (E, M, SG, and SB). E&M Type I requires 2-pair wiring and Type II requires 3-pair wiring. Typical wiring and cross-connect information for both types of signaling are shown in Figure 4.12.

2TTE Installation

A 2TTE trunk is installed as follows:

1. Wire the two-wire analog trunk facilities and two- or four-wire DC signaling facilities from the telephone company point-of-demarcation onto the CDF. A typical example is shown in Figure 4.12.

2. Insert the 2TTE card(s) in slots 06 through 18 of the basic or expansion cabinet.

3. Connect the CDF cable to the cabinet and label/run to the CDF. Terminal block connection information is provided in Figure 4.12.

4. Cross connect the lines on the CDF. Specific cross-connect information is provided in Table 4.5 for CDF cables 4, 6, and 8; Table 4.6 for CDF cables 5, 7, and 9; Table 4.7 for CDF cable 10; and Table 4.8 for CDF cable 11.

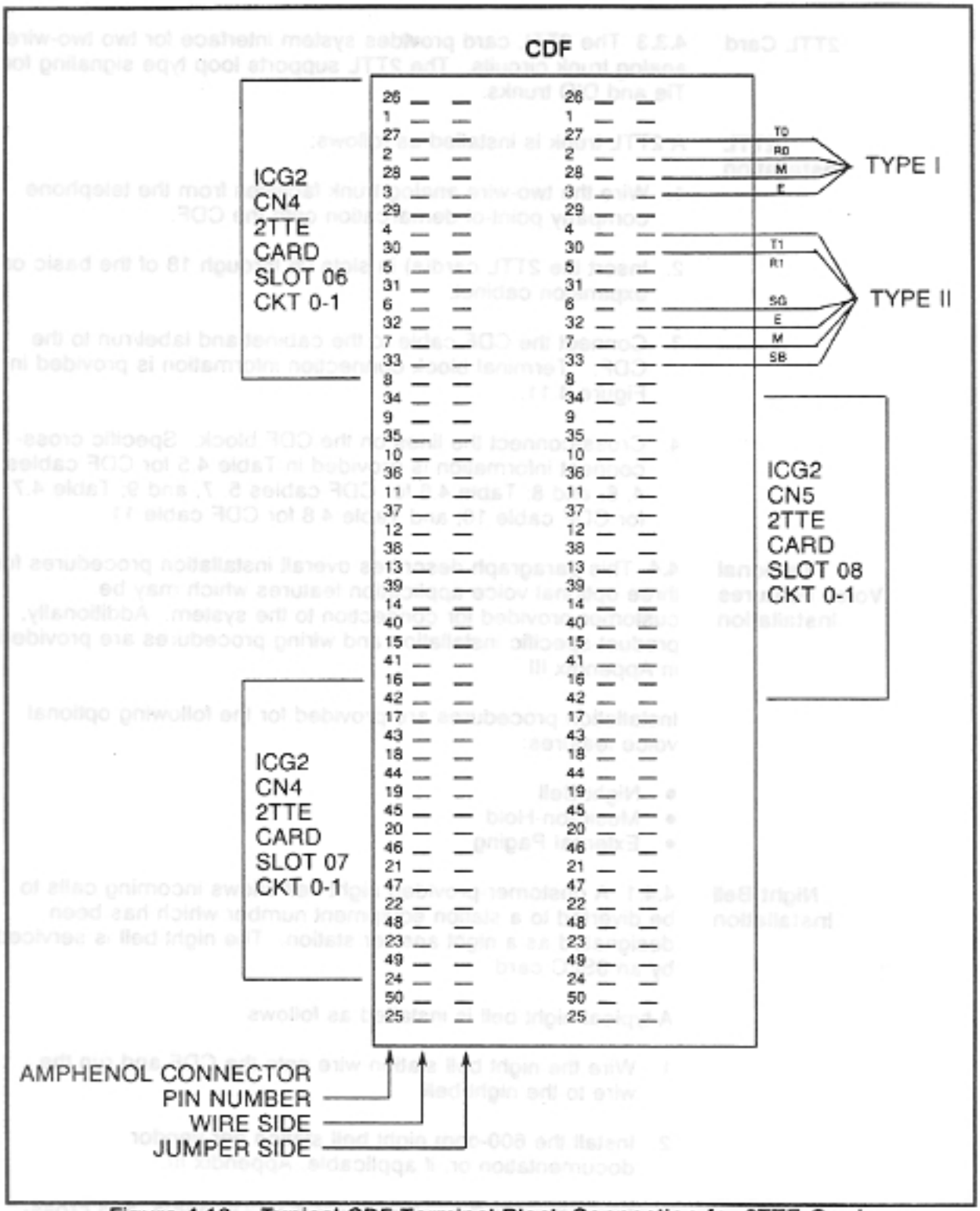

Figure 4.12 Typical CDF Terminal Block Connection for 2TTE Card

2TTL Card

4.3.3 The 2TTL card provides system interface for two two-wire analog trunk circuits. The 2TTL supports loop type signaling for Tie and DID trunks.

2TTL Installation

A 2TTL trunk is installed as follows:

1. Wire the two-wire analog trunk facilities from the telephone company point-of-demarcation onto the CDF.

2. Insert the 2TTL card(s) in slots 06 through 18 of the basic or expansion cabinet.

3. Connect the CDF cable to the cabinet and label/run to the CDF. Terminal block connection information is provided in Figure 4.11.

4. Cross-connect the lines on the CDF block. Specific cross-connect information is provided in Table 4.5 for CDF cables 4, 6, and 8; Table 4.6 for CDF cables 5, 7, and 9; Table 4.7 for CDF cable 10; and Table 4.8 for CDF cable 11.

Optional Voice Features Installation

4.4 This paragraph describes overall installation procedures for three optional voice application features which may be customer-provided for connection to the system. Additionally, product-specific installation and wiring procedures are provided in Appendix III.

Installation procedures are provided for the following optional voice features:

- Night Bell
- Music-on-Hold
- External Paging

Night Bell Installation

4.4.1 A customer-provided night bell allows incoming calls to be diverted to a station equipment number which has been designated as a night answer station. The night bell is serviced by an 8SLC card.

A typical night bell is installed as follows:

1. Wire the night bell station wire onto the CDF and run the wire to the night bell.

2. Install the 600-ohm night bell station per vendor documentation or, if applicable, Appendix III.

3. Insert the 8SLC card, connect the CDF cable, and cross-connect per paragraph 4.2.1.

Music-On-Hold Installation

4.4.2 A customer-provided music source (FM radio, tape deck, etc.) can be interconnected to the system to allow incoming callers to listen to music while on hold. A music source can be connected by using the 4BWC card with Packages A - D or by using the RVAC card with Package D. There is no limitation to the number of lines or trunks that can be programmed through the system software for the music-on-hold feature.

Music Source RVAC Card

4.4.3 With Package D, the system offers music with the RVAC card. The music is programmed onto the card (see Data Base TL-12301-1001).

Music Source RVAC Card Installation

Insert the RVAC card into a card slot, 00 to 14.

Music Source 4BWC Card

With Packages A-D, a 4BWC music source is installed as follows:

1. Wire the music source station wire onto the CDF and run the wire to the music source.
2. Install the 600-ohm music source per manufacturer's documentation or, if applicable, Appendix III.
3. Insert the 4BWC card, connect the CDF cable, and cross connect per paragraph 4.2.1.

External Paging Option

4.4.4 A customer-provided external paging amplifier allows a station operator to page individuals or make announcements.

A typical external paging device is installed as follows:

1. Wire the external paging station wire onto the CDF and run a wire to the paging amplifier.
2. Install the 600-ohm paging amplifier per vendor documentation or, if applicable, Appendix III.
3. Insert the 4BWC card, connect the CDF cable, and cross connect per paragraph 4.2.1.

NOTE: The external paging unit can be accessed as a normal station when cross connected an 8SLC card. When used with a 4BWC card, the external paging unit must be accessed and answered with a feature access code.

THIS PAGE IS INTENTIONALLY LEFT BLANK.

DATA APPLICATION PERIPHERAL INSTALLATION

5.0 This section describes the installation of data communications peripherals. The peripherals are the DTA (Data Terminal Adapter) and the DIU (Data Interface Unit) associated with the system, as well as customer-provided modems, terminals, printers, etc. All data communications devices connected to the DTA or DIU must be equipped with a digital serial interface conforming to the EIA (Electric Industries Association) RS-232C Standard.

Installation procedures are provided for the following:

- DTA equipped CSD telephones and peripherals.
- DIUs and peripherals.

Appendix I of this document, RS-232C Cable and Pin Configuration Information, is provided as reference.

CSD Telephone Equipped with DTA (Data Terminal Adapter) Overview and Installation

5.1 This paragraph describes the installation of the CSD telephone equipped with a DTA. The DTA is installed in the CSD and provides an RS-232C connector to be used with terminals, printers, and other data communications-related equipment configured as DTEs (Data Terminal Equipment). The DTA works in conjunction with the system to support switched data calls at a variety of bit rates. Figure 5.1 shows the typical data communications configuration using a DTA equipped CSD. This paragraph covers installation of the following:

- Installation of the DTA and CSD.
- Installation of DTE-configured equipment (terminals, printers, etc.) connected to the DTA.

CSD/DTA Installation

5.1.1 The CSD equipped with a DTA is installed as follows:

DTA Installation

Referring to Figure 5.2, install the DTA card in the CSD telephone as follows:

CAUTION

Installation should be done by a craftsperson on a conductive mat and with a ground strap attached to the wrist to protect the CMOS (Complementary Metal Oxide Semiconductor) components in the DTA and CSD from electrostatic discharge.

1. Remove the DTA, AC power adapter, two grounding wires, five washers, and three screws from the package.

2. Remove the upper case from the CSD.
3. Remove the masking plate from the base of the CSD.
4. Install the two grounding wires to the CSD control circuit card. See Figure 5.2. Grounding wire A is 2 inches (50 mm) long. Grounding wire B is 8-5/8 inches (220 mm) long. Each wire is attached with a washer and a screw.
5. Place the DTA on the bosses.
6. Connect the two grounding wires to the DTA with two washers and screws used to fasten the DTA to the bosses.
7. Install the third washer and screw used to fasten the DTA to the bosses.
8. Connect the ribbon cable between the connector on the DTA and the connector on the control circuit card.
9. Replace the upper case.
10. Insert the power adapter cord into the AC power jack on the rear of the CSD.
11. Insert the AC power adapter into an AC power outlet.
12. Insert the modular cord into the CSD.

CSD Installation

The CSD is installed, wired, and cross connected to the 8DTC card as outlined in paragraph 4.2.3.

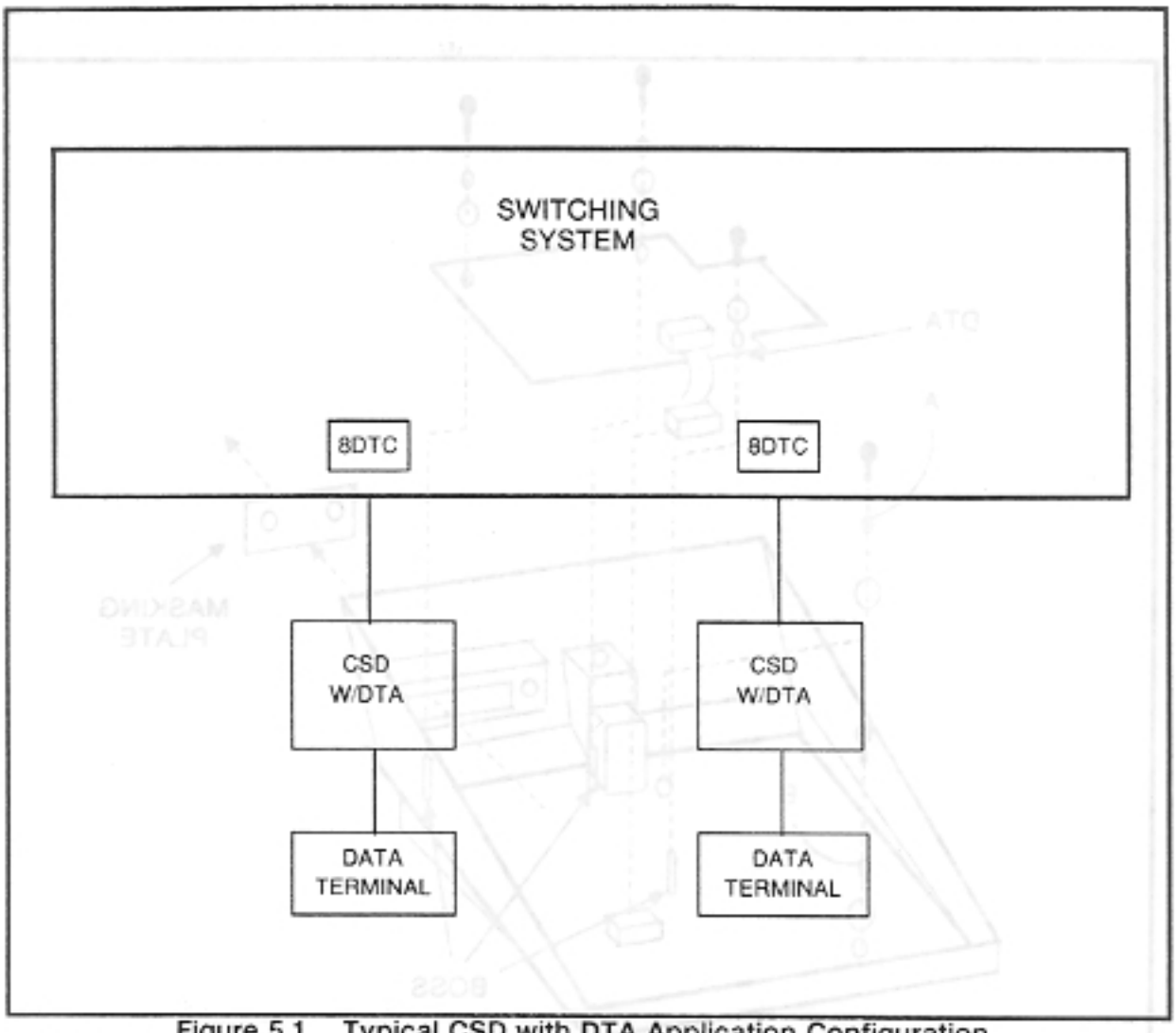

Figure 5.1 Typical CSD with DTA Application Configuration

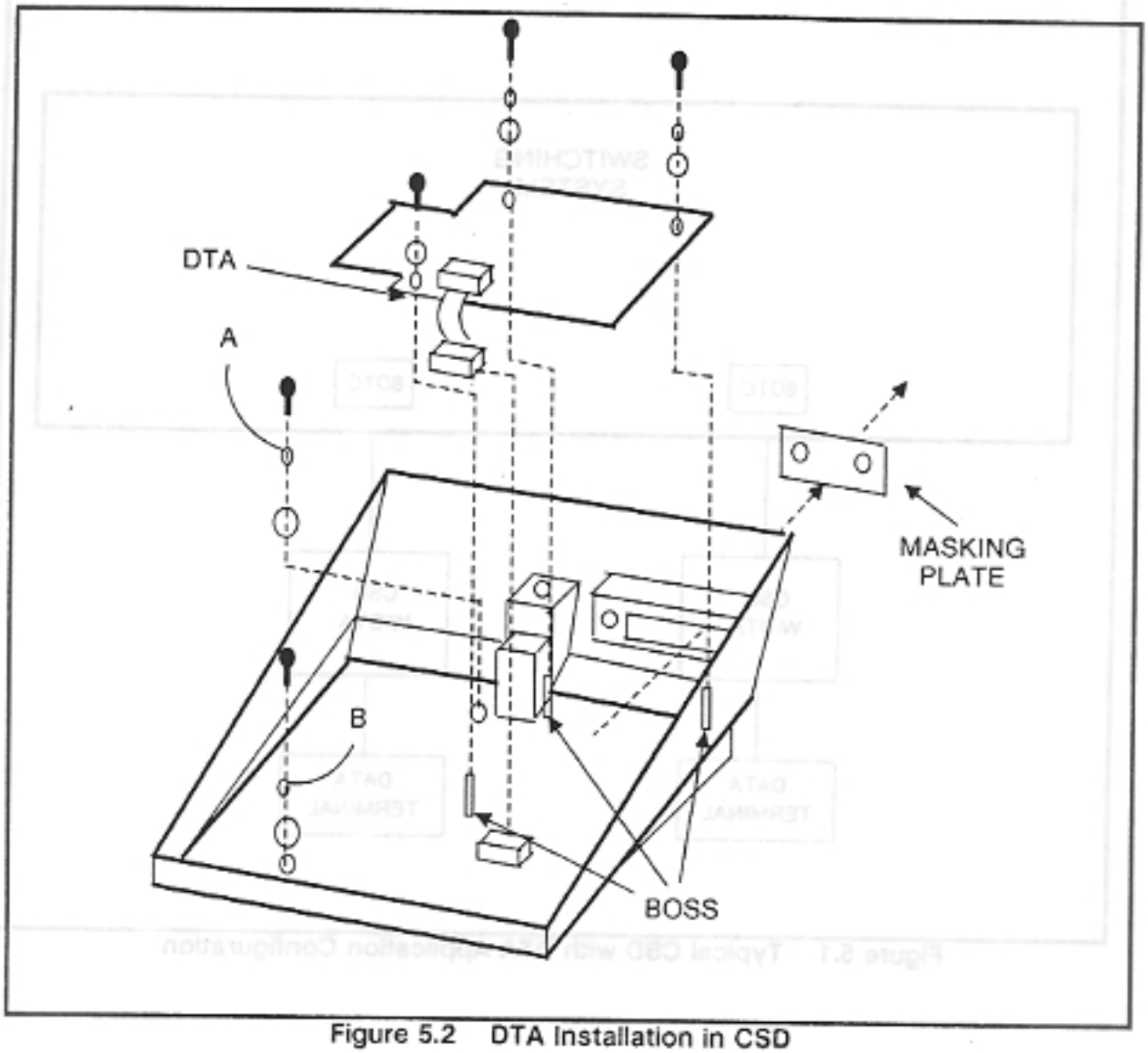

Figure 5.2 DTA Installation in CSD

CSD with Terminal or Printer Installation

5.1.2 To configure a CSD/DTA to a terminal, printer, or other DTE device, install the DTE equipment as follows:

1. Set up the DTE device per manufacturer's documentation.
2. Locate the male-male ended RS-232C cable, and ensure compatible cable configuration using Appendix I as a reference.
3. Connect the RS-232C cable to the CSD and DTE. Secure the RS-232C connectors with machine screws.
4. Power up the DTE device and run self-tests per manufacturer's documentation.

NOTE: For operational information, reference CI-484-436 System CSD User's Guide.

DIU Overview and Installation

5.2 The DIU as shown in Figure 5.3 is used to establish intra-system data calls. The DIU is paired with an EKT through the system software for simultaneous voice and data calling.

The following DIU configurations are supported:

- Stand-alone DIU with connected terminal
- DIU with associated EKT and connected DTE terminal or printer

NOTE: Connection of the system to a DCE (Data Communications Device) through a DIU is not available with Package D.

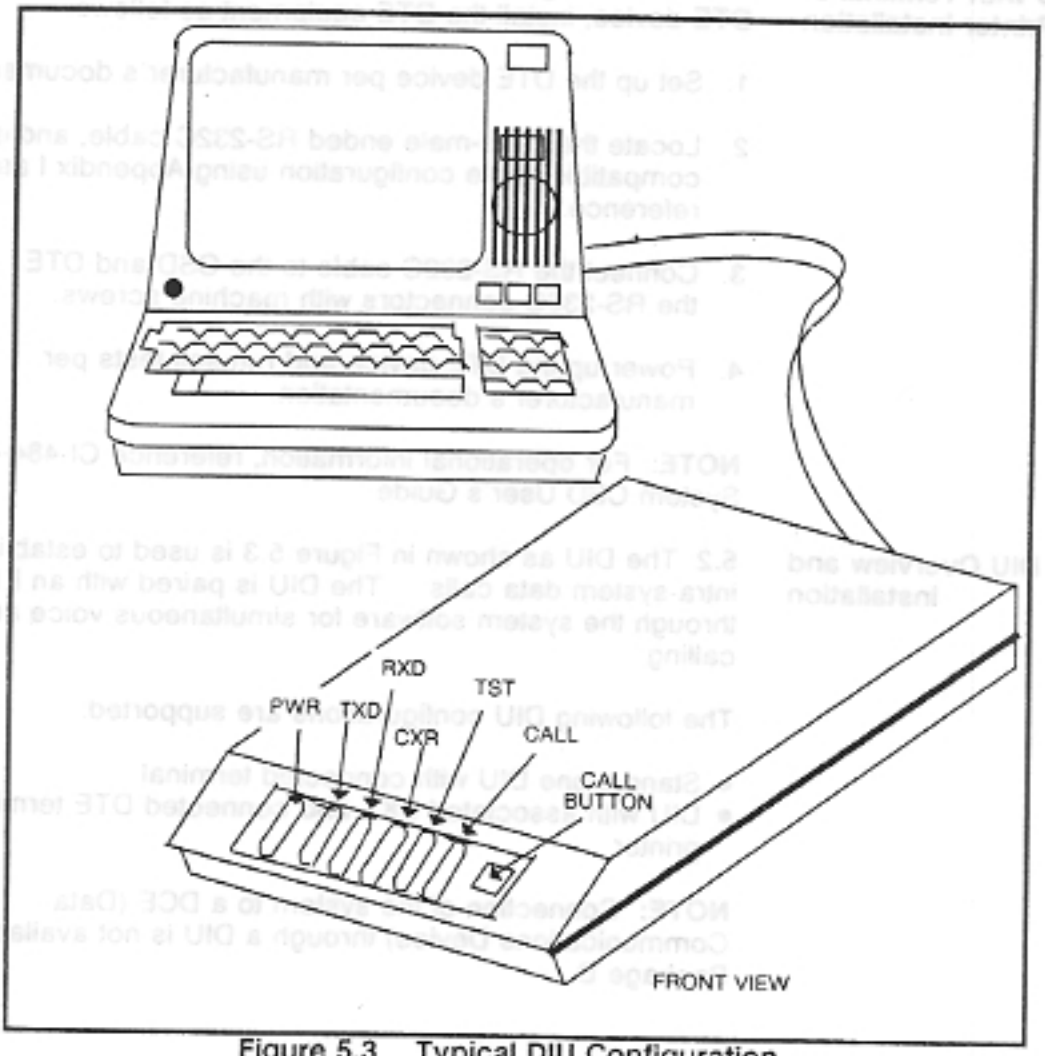

Figure 5.3 Typical DIU Configuration

DIU Installation

5.2.1 The DIU is installed as follows:

DIU Installation/ Cabling/Wiring

1. The DIU is cabled/wired and cross-connected to an 8DTC card as outlined in paragraph 4.2.3. The DIU is connected to the 8DTC through pin numbers 3 (RING) and 4 (TIP) of the line RJ11C connector as shown in Figure 5.4.

DIU to DTE Installation

2. Place the DIU at the desired location.

Terminal/Printer Installation

3. If applicable, install the customer premises DTE terminal or printer as follows:

   (a) Install the customer premises terminal/printer per manufacturer's documentation.

   (b) Position the DIU rear panel switch to DTE mode.

   (c) Connect the terminal/printer to DIU using a RS-232C male-male connectors. Consult manufacturer's documentation or the pinout information contained in Appendix I to ensure terminal/printer-DIU compatibility.

4. Power on the terminal/printer per manufacturer's documentation. The DIU is line powered.

NOTE: For operational information, refer to CI-484-447 Data Communications using a Data Interface Unit.

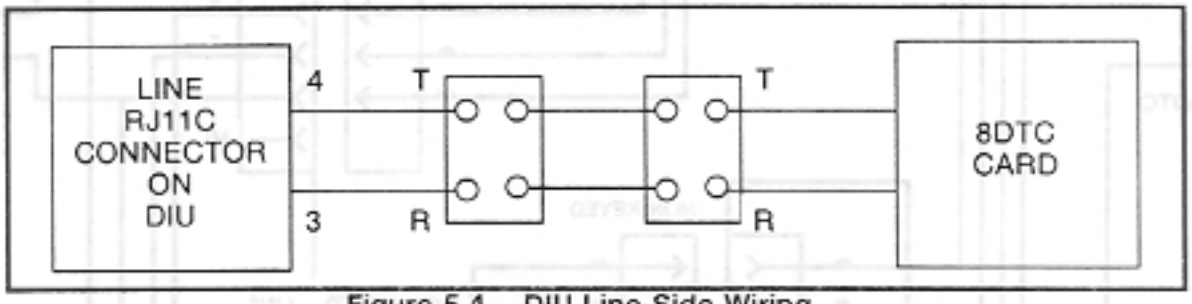

Figure 5.4 DIU Line-Side Wiring

Associated EKT Installation

5.2.2 A DIU associated EKT is installed as follows:

1. Wire and install the EKT per paragraph 4.2.2. The EKT can be cabled to the system separately with a dedicated line or can optionally be cabled through the DIU, making use of the DIU modular connector and cable as shown in Figure 5.5.

2. The EKT must be paired with an installed DIU per the TL-120301-1001 Data Base.

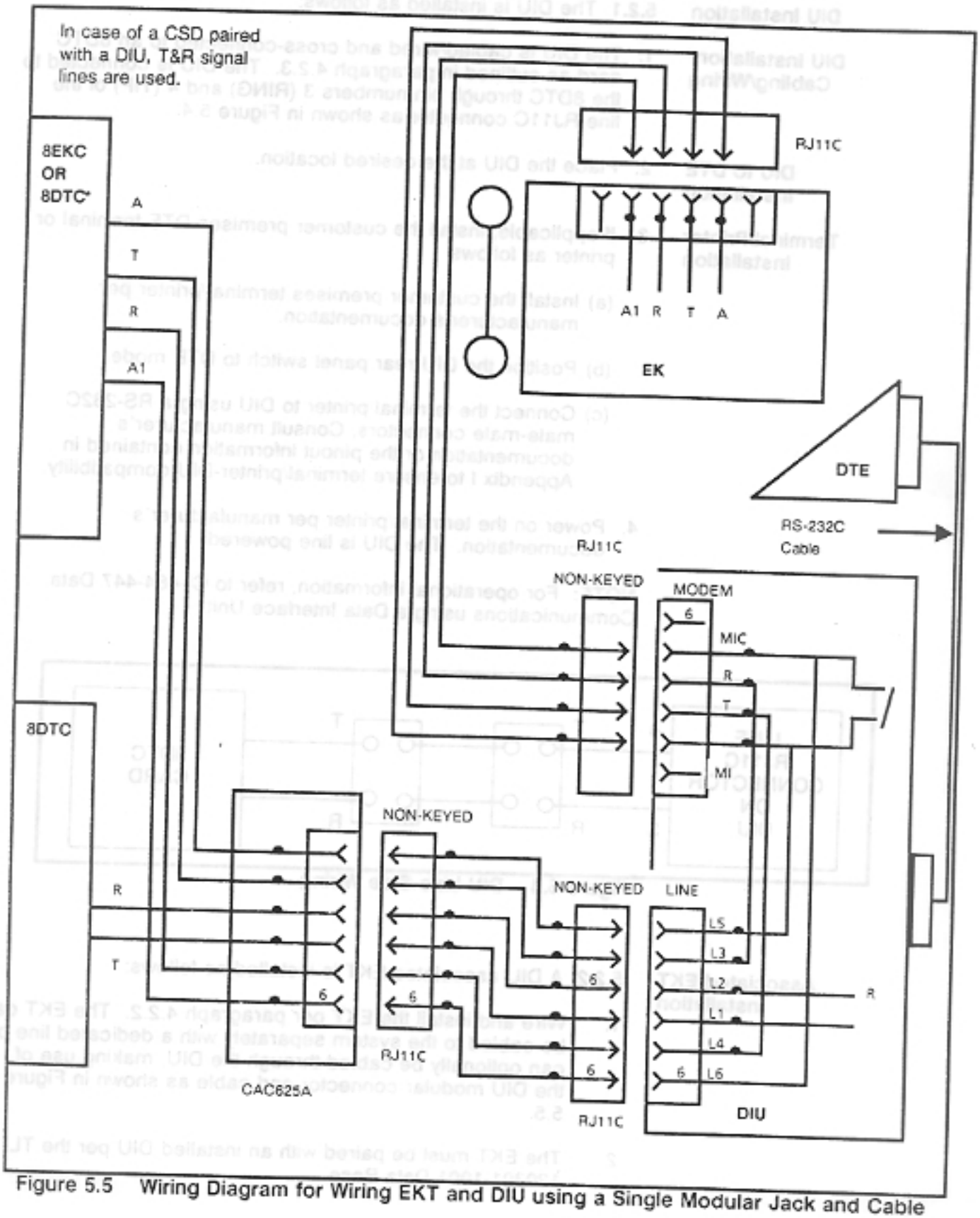

Figure 5.5 Wiring Diagram for Wiring EKT and DIU using a Single Modular Jack and Cable

4CHT Installation

5.2.3 The 4CHT card, in Packages C and D, provides output to a Hotel/Motel printer.

Insert the 4CHT card in card slot 00 through 14 of the basic or expansion cabinet.

THIS PAGE IS INTENTIONALLY LEFT BLANK.

SYSTEM CONTROL COMPONENT INSTALLATION

6.0 This section describes the procedures for installing the administrative control devices used to monitor and load the system software. Data base programming, maintenance, and diagnostics are performed with this device. The administrative control device communicates with the switching system through one of two RS-232C serial communications interface ports.

This section provides installation procedures for the following three administrative control devices:

- PMP (Portable Maintenance Panel) - An EPSON HX-20 microcomputer connected to the system on serial communications port 00 (CN13)
- PC (Personal Computer) - An IBM or compatible PC connected to serial communications port 00 (CN13)
- MCT (Master Control Telephone) - A CSD or Attendant Console connected to the system

Administrative control can be accomplished on-site using the PMP, personal computer, or MCT connected directly to the equipment cabinet. Remote administrative control is also possible with the system. A PMP or personal computer can be connected to the system using a modem link. Figure 6.1 shows typical remote maintenance center connections.

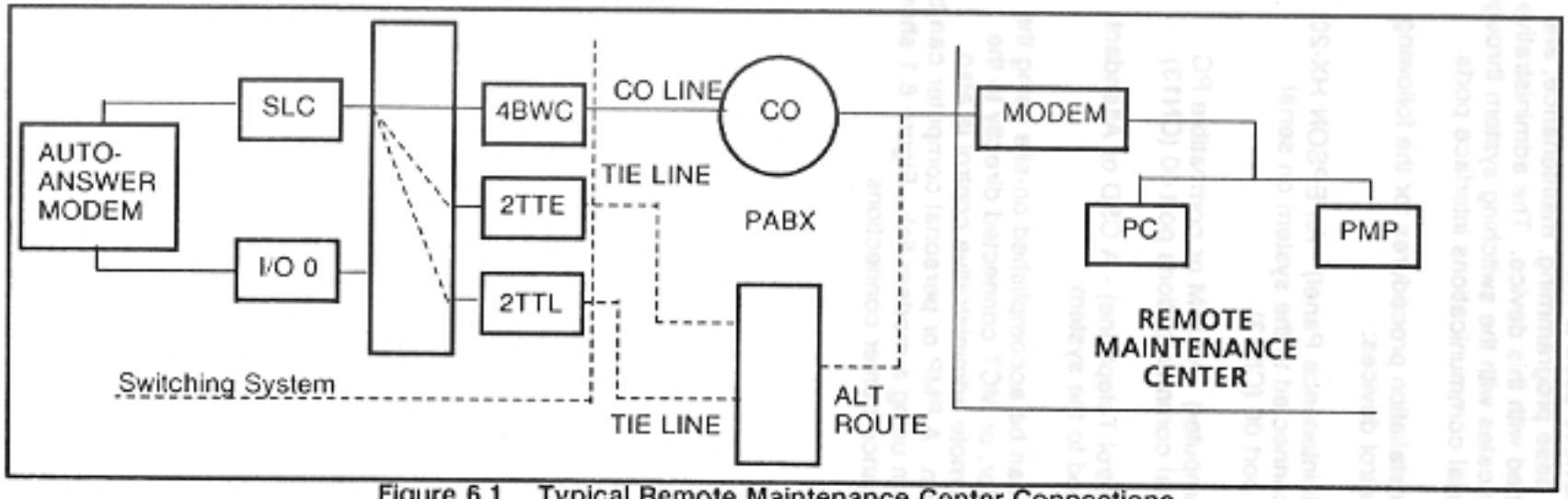

Figure 6.1 Typical Remote Maintenance Center Connections

Serial Communications Ports

6.1 The data base programming, maintenance, diagnostics, and control of the system are provided through two independently programmable RS-232C serial communications ports. These ports support the PMP (Portable Maintenance Panel) and PcMP (Personal Computer Maintenance Panel). An MCT (Master Control Telephone) communicates with the system through a line card.

The specifications of both RS-232C communications ports are as follows:

Format:	Asynchronous
Communications Mode:	Full duplex
Speed:	110, 300, 600, 1200, 2400, 4800 bps
Code:	7 bit ASCII
Stop Bit:	One or two
Parity:	Even, odd, or none
Character Length:	7 or 8 bit (for 8 bit, most significant bit must be zero or space)

PMP (Portable Maintenance Panel) Overview

6.2 The PMP is a dedicated communications device used for system maintenance, diagnostics, and data base programming. The PMP, shown in Figure 6.2, is an EPSON HX-20 hand-held microcomputer. It has a keyboard for entry of CMC (Change and Maintenance Command) code numbers, a small built-in printer for screen-to-printer hard copy, an LCD display, function keys, an RS-232C port, a battery charger, and a built-in microcassette tape drive. A microcassette tape must be purchased to store the system data base. It is required that another 60-minute backup cassette* be provided to store all ODDB (Office Dependent Data Base) enhancements or modifications. If the installation includes the optional floppy disk drive and the HX-20 memory expansion, the ODDB can be saved on diskette.

CAUTION

*Use only Leaderless Cassette Tapes. Use of cassettes with tape leaders may cause the loss of the ODDB.

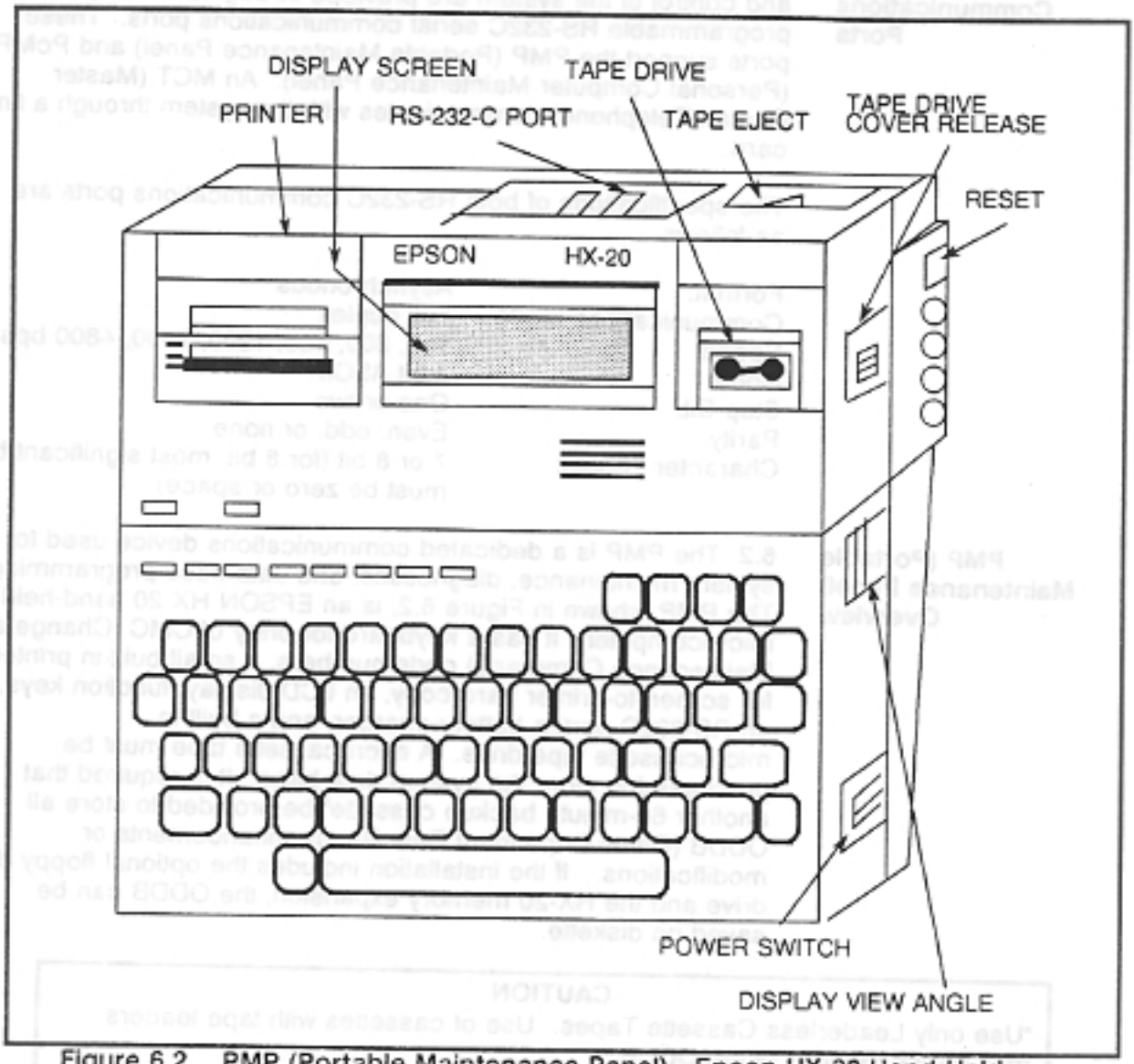

Figure 6.2 PMP (Portable Maintenance Panel) - Epson HX-20 Hand-Held Computer

PMP Installation

6.2.1 The PMP is connected to the system as follows:

1. Ensure power switch of the PMP is in the OFF position.
2. Connect the EPSON #715 cable to CN13 on the equipment cabinet as shown in Figure 6.3. Secure the cable with machine screws.
3. Connect the eight-connector plug to the PMP receptacle labeled RS-232C as shown in Figure 6.3. See Appendix I for #715 cable configuration and color codes.
4. Ensure that the PMP's batteries are fully charged. If the battery is discharged, plug in the power supply to power outlet and then plug the power cabling to the PMP receptacle labeled adapter.
5. Insert the control program tape and power up to prepare the unit for software load (Software initialization and load is covered in section 7.0).
6. The PMP will prompt user to port configuration.

PMP Installation with Optional Disk Drive

6.2.2 The Optional Disk Drive Unit EPSON TF-20 is installed as follows:

1. Ensure that the PMP is equipped with the RAM expansion H20EU. The expansion unit is attached to the left hand side of the PMP and is marked EXPANSION UNIT.
2. Ensure that the PMP and disk drive power switches are in the OFF positions.
3. Remove the bottom panel of the PMP (Figure 6.3)
4. Set dip 4 of the dip switch in the PMP to on. The dip switch is well inside and to the left as viewed when the bottom panel is open.
5. Replace the PMP bottom panel.
6. Connect the EPSON #707 cable between the PMP and disk drive using the connector receptacles shown in Figure 6.3.

CAUTION

Always turn on the PMP disk drive before turning on the PMP power switch.

7. Power up the unit and insert the control program disk or tape to prepare unit for software load. (Software load is covered in section 7.0.)

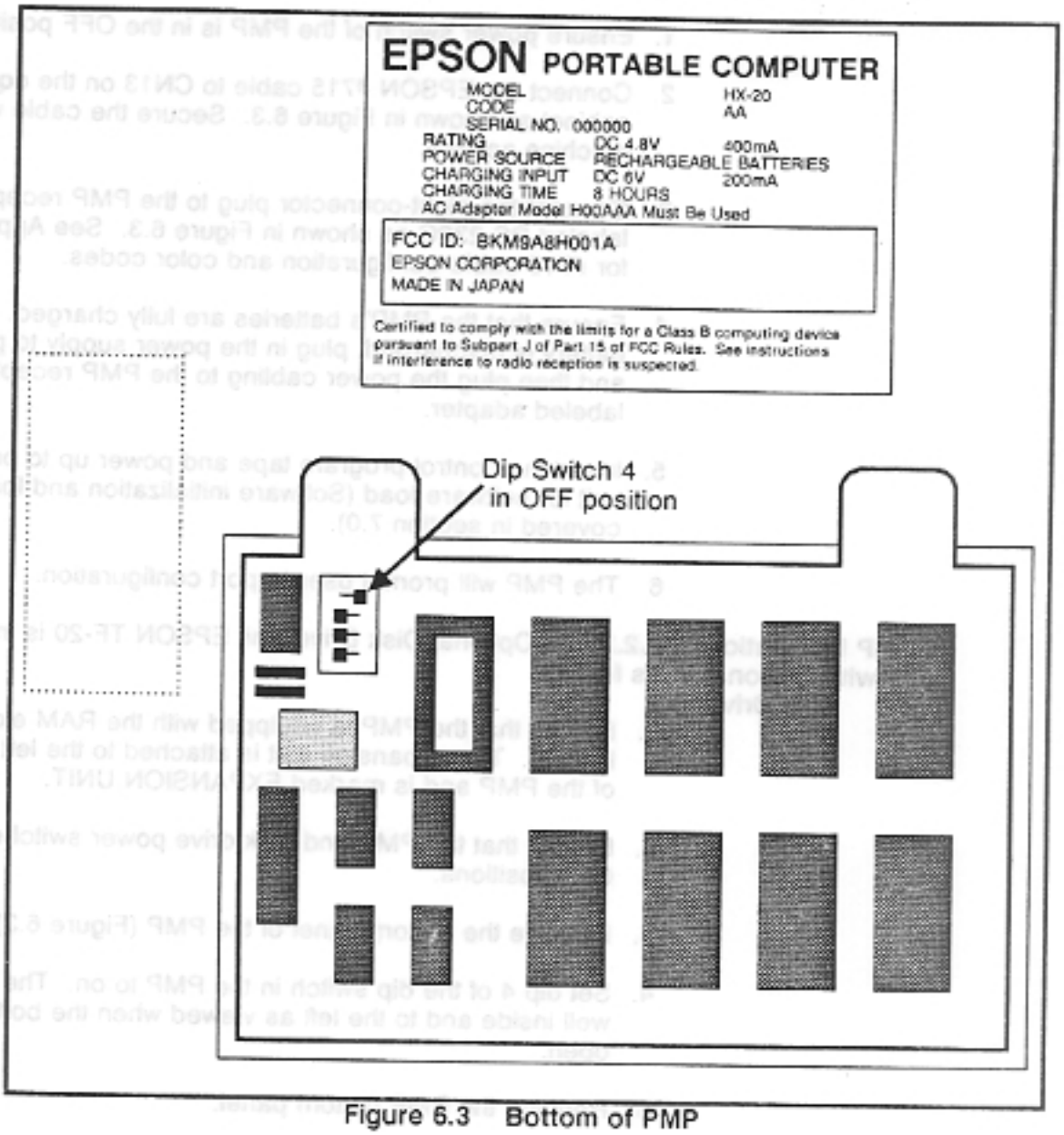

Figure 6.3 Bottom of PMP

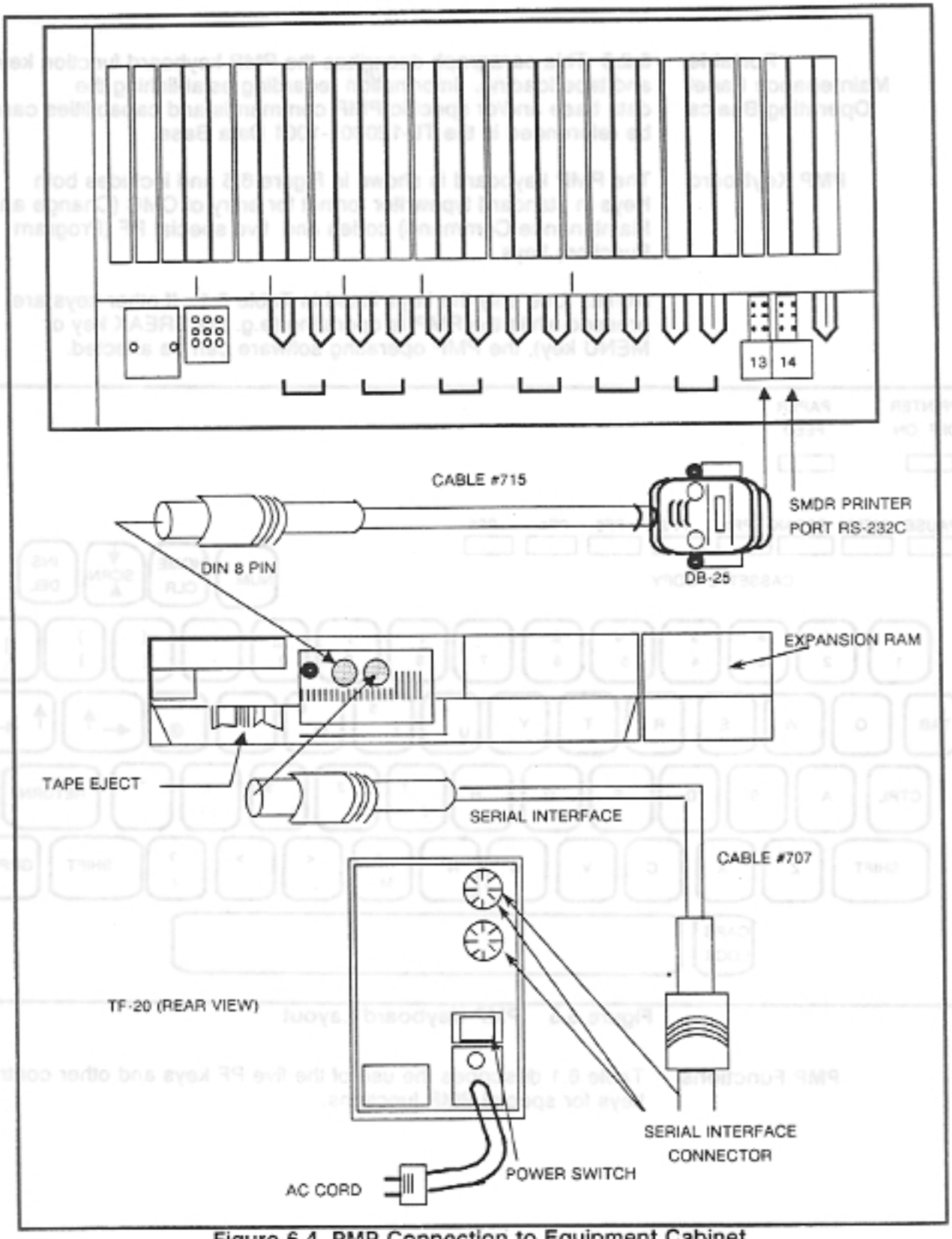

Figure 6.4 PMP Connection to Equipment Cabinet

Portable Maintenance Panel Operating Basics

6.2.3 This paragraph describes the PMP keyboard function keys and tape loading. Information regarding establishing the data base and/or specific PMP commands and capabilities can be referenced in the TL-120301-1001 Data Base.

PMP Keyboard

The PMP keyboard is shown in Figure 6.5 and includes both Keys in standard typewriter format for entry of CMC (Change and Maintenance Command) codes and five special PF (Program Function) keys.

NOTE: Use only the keys listed in Table 6.1. If other keys are pressed while the PMP is operating (e.g. the BREAK key or MENU key), the PMP operating software can be affected.

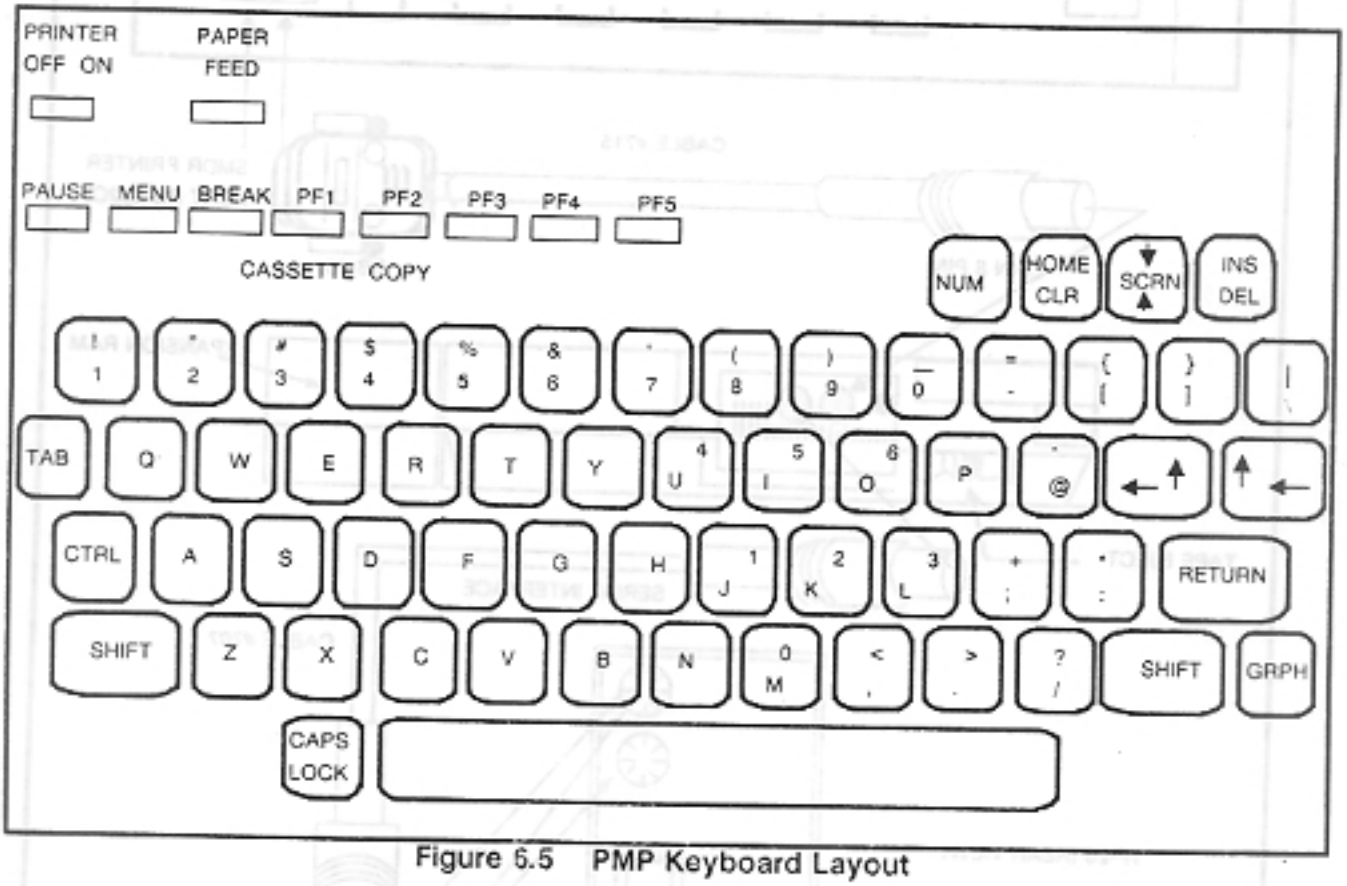

Figure 6.5 PMP Keyboard Layout

PMP Functions

Table 6.1 describes the use of the five PF keys and other control keys for special PMP functions.

Table 6.1 PMP Program Function Key Definitions

Function	PMP Key(s)	Description
Select/Return	RETURN	Required as a prompt to the system after typing the security code or CMC three-digit number. Can be used to move the cursor to the next parameter position
Release/RLS	PF1	Permits exit from a command at any time. Useful to change to another command or exit from an error condition.
Terminate/ TRM	SHIFT + PF1 (PF6)	Terminates the command mode. (RLS must be used before using TRM.)
Cancel/CAN	PF2	Cancels a keyed in P value. Useful to erase typing errors. Will not delete a value from memory. (Can be used to enter a blank value.)
PRINT	CTRL + PF2	Sends the display on the current screen to the printer. One screen is printed at a time. The cursor must be visible on the screen and all PMP/system communications completed before pressing PRINT.
ADD/CHG	PF3	Writes (enters) the typed P values into data base memory. In some tables, RMV must be used to delete old values before pressing ADD/CHG. PMP screen indicates whether the values were added or changed.
Duplicate/ DUP	PF4	Increments the table's key parameter(s) while causing the remaining P values to stay the same as the previous screen. Useful for entering repetitive values such as station and trunk data.
Tape Start	SHIFT + PF4 (PF9)	Starts the ODDB back-up tape during the load or save data base procedure.
Display/DSP	PF5	Required after entering some CMC commands. Shows P values of a table. If no value exists for a parameter, the P value is blank. Depressing DSP a second time increments the main parameters, and their P values are displayed. Depressing DSP at the end of a table listing either displays the first P values again or releases the table by exiting.
Remove/RMV	SHIFT + PF5 (PF10)	Deletes all P values from a table. Required at some tables before new values can be entered.

Table 6.1 PMP Program Function Key Description (Continued)

FUNCTION (PF) KEY NAME	PMP KEY	FUNCTION
SHIFT	SHIFT	When held down and another key is depressed, the SHIFT key accesses a different function for that key.
CTRL (Control)	CTRL	When held down and another key is depressed, the CTRL key accesses a different function for that key.
CURSOR KEYS		
RTN	RETURN	Advances cursor to the next numbered parameter on the screen. Depressing RTN when the cursor is at the last numbered parameter moves the cursor to P1 again (same screen). Depressing after typing an entry moves cursor to the next P value entry position. RTN does not write to the data base.
GO TO P1	Shift + j	Moves cursor to P1 on the screen.
GO TO P2	Shift + k	Moves cursor to P2 on the screen.
GO TO P3	Shift + l	Moves cursor to P3 on the screen.
GO TO P4	Shift + u	Moves cursor to P4 on the screen.
GO TO P5	Shift + i	Moves cursor to P5 on the screen.
GO TO P6	Shift + o	Moves cursor to P6 on the screen.

Personal Computer Overview

6.3 The Switching System Installation and Maintenance Program is software package written for the IBM PC, PC/XT, or IBM compatible personal computer to emulate the functions of the PMP. All aspects of PMP changing of services, adding new lines, installing new features, etc. can be be accomplished using a PC and this software package. The PC can be directly connected to the RS-232C serial port at CN13, or an auto-answer modem can be connected to CN13 with the line side interconnected to a line card so that a remote PC can access the switching system.

The installer must meet the following prerequisites in order to perform successful data base loads/changes:

- The installer must have a basic understanding of and experience in using the PC.
- The installer must be able to format floppy diskettes using the applicable DOS operating system commands.

Personal Computer Hardware Requirements

6.3.1 The following hardware is required for using the PC as an administrative control device.

- IBM (or compatible) PC, PC/XT

- Color or monochrome monitor
- 512K bytes of memory
- DOS 2.1 or later release
- Printer (serial or parallel)
- Serial RS-232C port for communications
- Printer port (serial or parallel)
- Associated cables
- Two floppy disk drives (or one floppy disk and a hard disk drive)

For remote application, a pair of modems is necessary. The modems must have the following features:

- Auto answer capability (system side)
- Full duplex
- Asynchronous
- Loss of carrier disconnect

PcMP Installation

6.3.2 The PcMP is installed as follows:

1. Cable connection

   a. For the locally connected PcMP, connect an RS-232C male-male null modem cable between port 1 on the PcMP and I/O port 0 CN13 on the equipment cabinet. The null modem cable should conform to the pinout in Figure AI-3.3 shown in Appendix I.

   b. For the remotely connected PC, the local Auto Answer modem should be connected to CN 13 (serial communication port 0) using a Null Modem cable conforming to the pinouts referenced in Appendix I. The modem should be installed and connected to the line side interconnection per the manufacturer's documentation. Install the distant end modem in the same manner, and connect to port one on the PC with a male-male RS-232C cable less than sixteen feet in length conforming to the pinout referenced in Appendix I.

2. Power on the PcMP using the POST (Power-On Self Test) as outlined in the manufacturer's documentation. Power on all PcMP accessories.

NOTE: Refer to the PcMP documentation for specific operating procedures.

MCT Installation

6.4 A CSD or Attendant Console can be designated through the system software as the MCT (Master Control Telephone). These devices are installed as outlined in Section 4.0 of this document and are designated as MCTs through the CMC commands referenced in TL-120310-1001 Data Base.

SYSTEM HARDWARE AND DATA BASE INITIALIZATION

7.0 This section describes the procedures for initializing the system hardware and loading the initial system software. The installation of the basic or expanded system has been covered in sections 1.0 through 6.0. If the system installation includes either the SMDR (Station Message Detail Recording) or Hotel/Motel options, the installer can choose to proceed to section 9.0 or 10.0 installing the associated optional equipment, or continue with this section to initialize the baseline system, implementing the options at a later time.

System Hardware Initialization

7.1 This paragraph describes the procedures for powering up the newly installed system hardware.

Powering Up the System

7.1.1 Power up the system as follows:

1. Connect the male end of the power supply cable to the equipment cabinet connector labeled PW.

2. Plug the power cord into the power outlet.

3. Power up the system by placing the main power switch in the ON position.

An LED power indicator (OPE) is located on the top right of the power supply. When lit, it indicates that the power supply is working. See Figure 7.1.

When the LED is not lit, it indicates the power supply has stopped working for one or more of the following reasons:

1. Commercial AC power has been lost.
2. The INPUT switch of the power supply has been set to the OFF position.
3. A major failure has occurred in the power supply.
4. One of the DC outputs is overloaded; i.e., there is a short circuit in the equipment cabinet.

System Memory Back-up

7.1.2 The system has a limited capability to maintain memory and call status during power interruption. Figure 7.2 shows the relationship of line use to length of storage time in milliseconds of interrupt. A memory back-up battery is continuously charged by the system to preserve the ODDB (Office Dependent Data Base) during a power failure. A fully charged battery will preserve the ODDB in RAM for approximately two weeks. Battery discharge status is indicated by the CPM card ALM lamp and other alarm devices. (Alarm button on an EKT, Attendant Console or DSS/BLF Console or a remote alarm unit.)

Following a battery discharge, the ALM lamp on the CPM card will remain on while the battery is recharging. If the ALM lamp remains on for 48 hours or more, the back-up battery should be replaced. See Figure 7.3. (The fault log records time and date when the battery reaches low charge.)

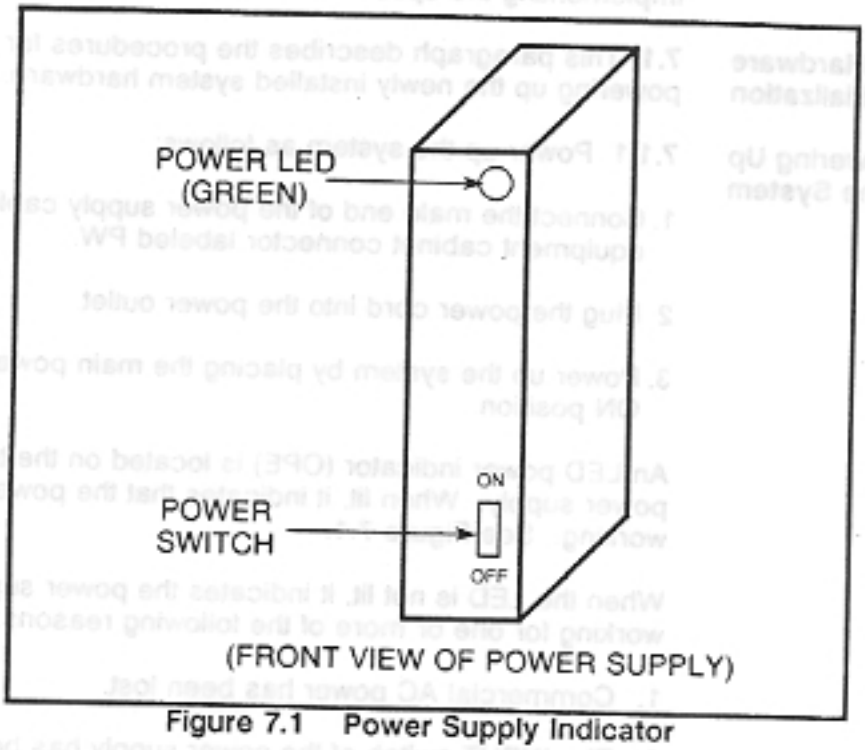

Figure 7.1 Power Supply Indicator

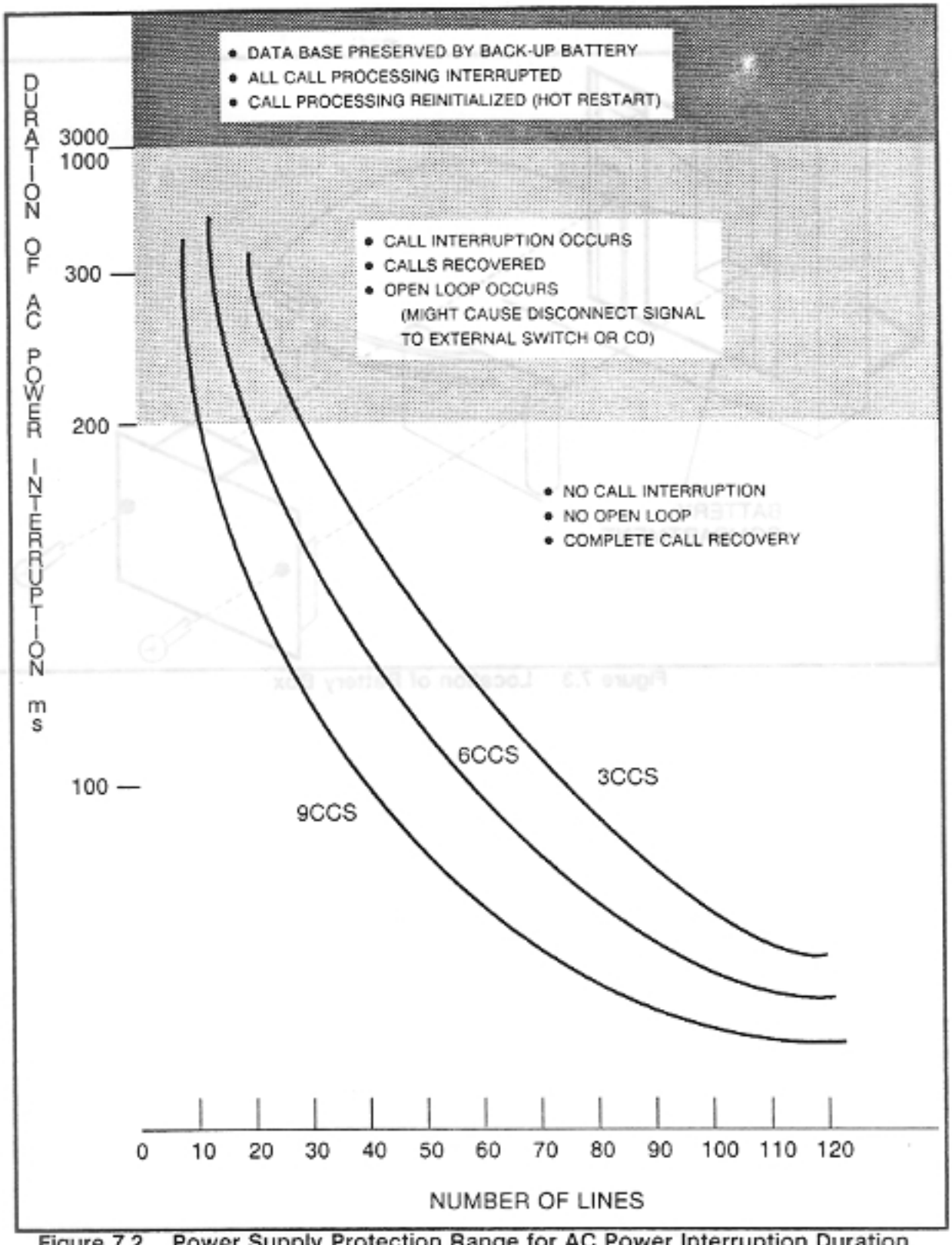

Figure 7.2 Power Supply Protection Range for AC Power Interruption Duration of Interrupt (ms) by Number of Lines per Hundred Call Seconds (CCS)

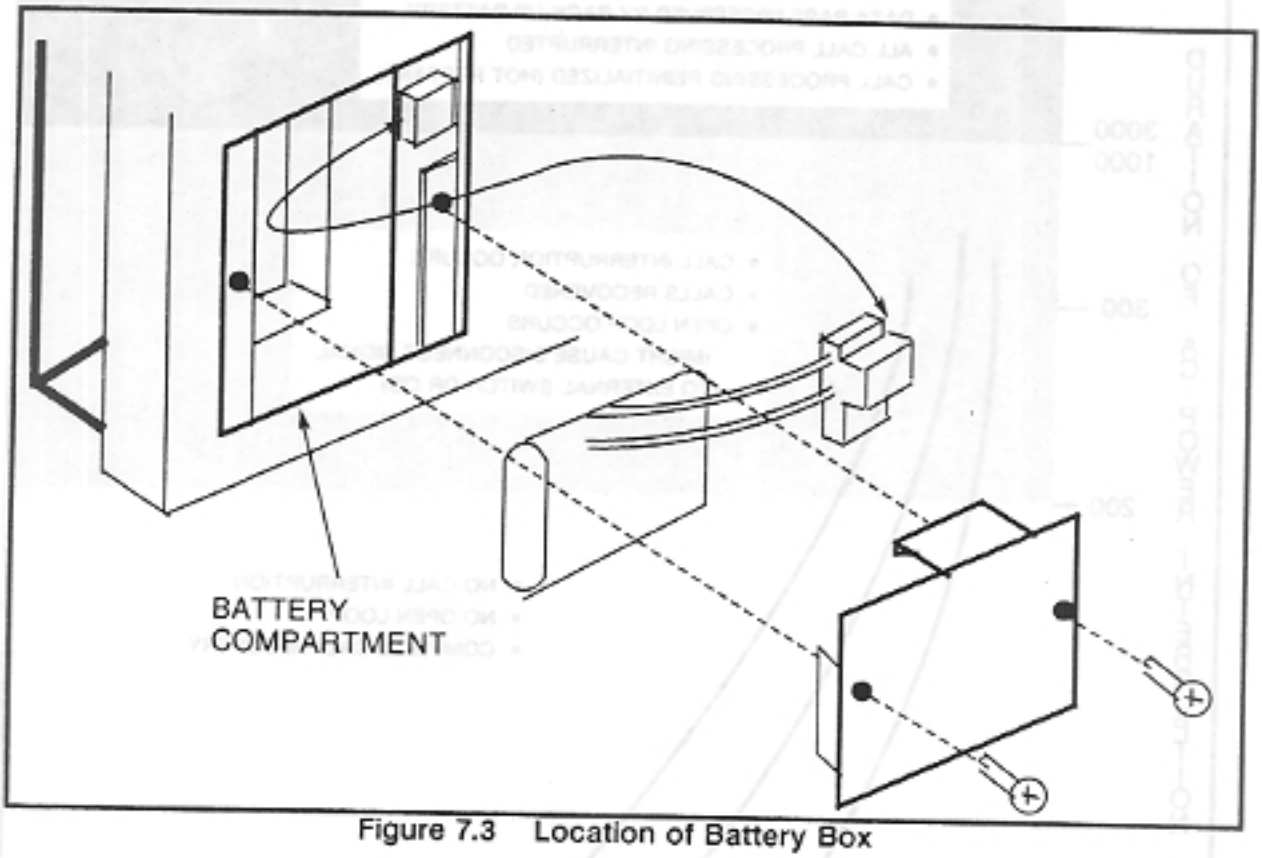

Figure 7.3 Location of Battery Box

System Controls, Alarms, and Indicators

7.1.3 Both the basic and expanded systems provide indicators of system status after the initial power up procedure. These indicators provide a quick indication of trouble conditions resulting from faulty equipment components or improper installation.

Alarm Indicators on CPM Card

The CPM card has a manual reset button, a restart COLD/HOT switch, and three LED lamps for indication of system status. See Figure 7.4.

The three LED lamps on the CPM card are:

- RUN (Green): - ON for normally operating system

  When the RUN lamp goes off, it indicates

  - System power failure
  - The CPM or SWC clock oscillating circuit is defective
  - The sixteenth attempt to restart the system through the watchdog timer has failed

  The RUN lamp is a MAJ (Major) alarm indicator. If the system is equipped with the 6PFT/6PFE (Power Failure Transfer/Expanded) option, calling service is transferred to the designated SLTs (Single-Line Telephones) and the customer-provided MAJ alarm indicator is activated.

- ALM (Red): - ON in the event of trouble

  When lit, the ALM (Alarm) lamp indicates that the software program has detected a failure in one or more areas of system operation. More detailed information on the cause of the failure can be obtained by using the fault log. When the ALM is on, the MIN (Minor) lamp at the remote location is also turned on via the optional 6PFT/6PFE.

- TO (Red): - ON in the event of trouble

  When lit, the TO (Timer Overflow) lamp indicates that the watchdog timer has detected a failure. Timer overflow indicates a failure in the CPM or MEM card; or the operating program has detected an error. When this happens, the system attempts to restart. If successful, the fault is logged. If after 16 retries the system has not been successfully restarted, the hardware which monitors these sequences will shut off the RUN lamp.

Remote Alarm Indicators (Optional)

Customer-provided remote alarm indicators can be connected to the equipment cabinet(s) through relays in the 6PFT/6PFE cards. MAJ (Major) and MIN (Minor) lamps can be installed at a remote location.

The remote alarm indications are:

- Neither MAJ or MIN is ON -- the system is running properly.
- The MIN is ON -- the system has a failure in one or more areas of system operation.
- Both MAJ and MIN are ON, or MAJ is on -- there is a system-wide problem.

A 6PFT/6PFE card is required for the remote alarm option. (A customer-provided remote alarm device is connected to the 6PFT/6PFE on pins 34/9 and 35/10 on CN12 as described in paragraph 4.1.3.)

EKT Alarms

Minor alarm indication on the DSS/BLF Console or EKT -- one of the LED lamps on the DSS/BLF Console or EKT can be assigned as an MIN alarm indicator. The software program will light the LED when it detects a failure in system operation. The specifics and/or locations of a failure can be read by the remote PMP or PcMP terminal. The specifics and/or locations of a failure can be read by the local PMP, Pc MP terminal, or MCT. Figure 7.5 is a functional block diagram which shows how local and remote alarms can be configured with the system.

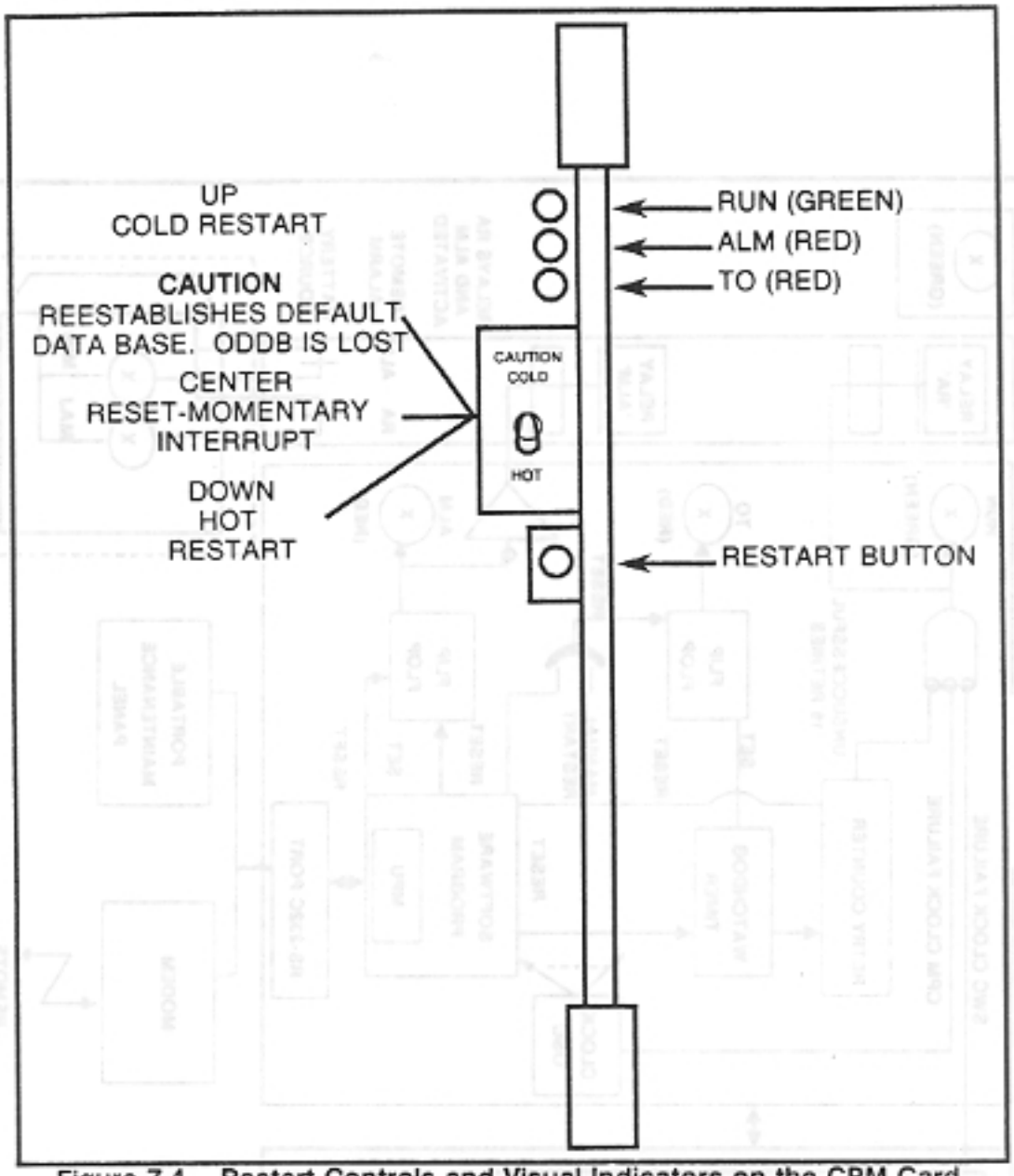

Figure 7.4 Restart Controls and Visual Indicators on the CPM Card

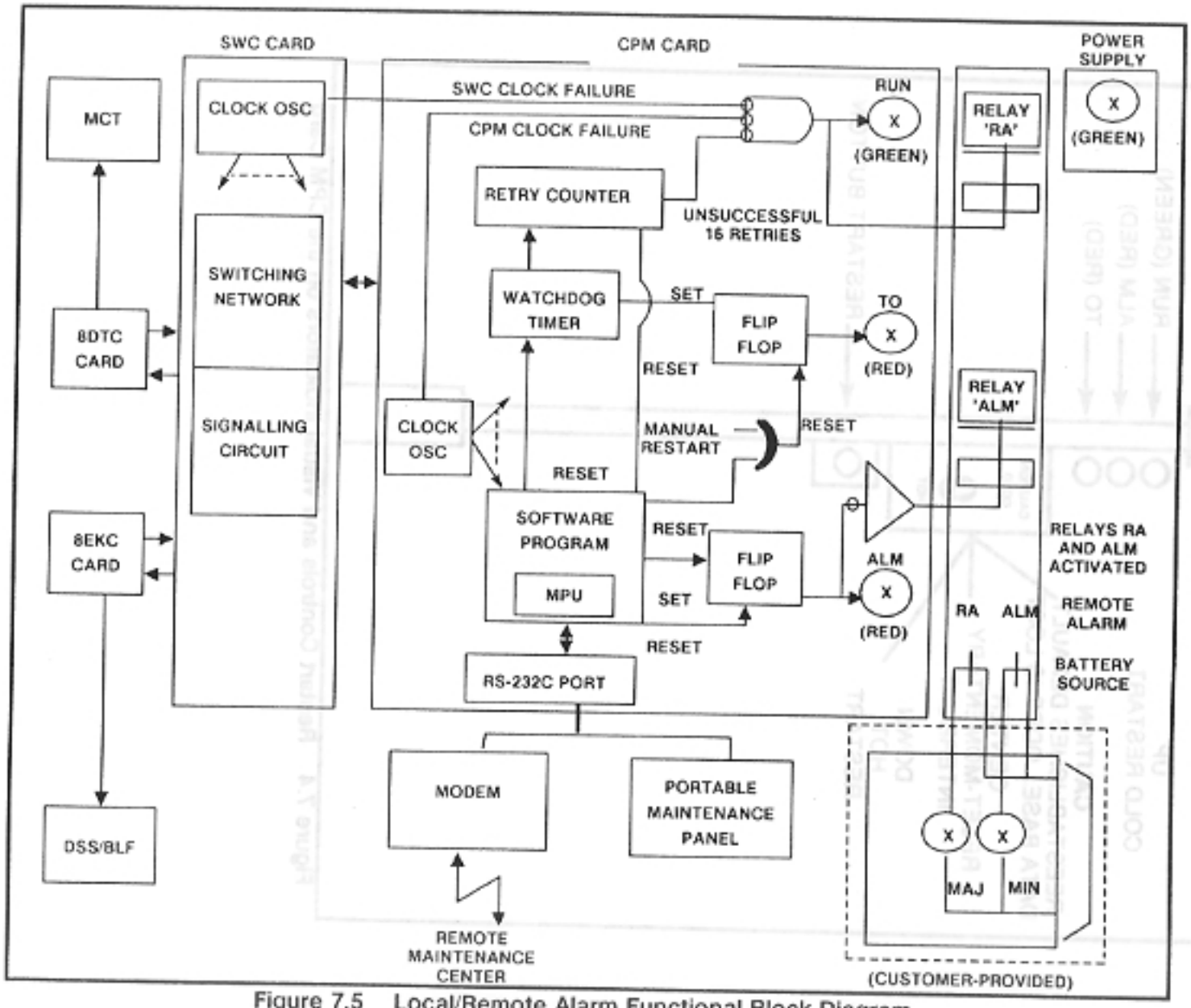

Figure 7.5 Local/Remote Alarm Functional Block Diagram

System Software Initialization and ODDB Load

7.2 This paragraph provides background information and outlines the procedures for initializing the system. This paragraph also provides information on loading and making ODDB changes with a PMP, PcMP, or MCT.

System CPM/Software Initialization Overview

7.2.1 To activate the RAM, the CPM must be initialized. Initialization resets program controls and RAM operation memory. The system can be initialized in three ways. The CPM card, in card slot 20, has a three-position restart toggle switch. See Figure 7.4. The three positions are center (normal) for RESET restart, up for COLD restart, and down for HOT restart. Below the toggle switch is a small restart momentary contact pushbutton. The toggle position determines which restart is initiated when the restart button is pushed.

- **COLD RESTART** - A COLD restart loads RAM with the operating system and the standard default data base. COLD Restart is used after installation to initialize the system, after a serious system failure, and/or after replacing the CPM or MEM cards. When power is restored after a power outage that resulted in the loss of battery back-up, a COLD restart must be performed. After a COLD restart, the system clock must be reset.

CAUTION

Modified data base, ODDB, and enhancements to the default data base are lost on COLD restart. Modified programs should be saved on a back-up data base tape or diskette for loading when a COLD restart is initiated.

To manually initiate a COLD restart: Hold the toggle switch in the UP position and push the restart button for approximately 5 seconds. Release the toggle switch back to center.

- **HOT RESTART** - A HOT restart resets program controls but does not affect the contents of RAM. All calls are dropped during HOT Restart. Any data base changes, modifications, or enhancements remain in the operating data base. The system initiates a HOT restart when it automatically recovers from power failure.

  To manually initiate a HOT restart: Hold the toggle switch in the DOWN position and push the restart button for approximately 5 seconds. Release the toggle switch to the center position.

- **RESET** - A RESET restart is a recovery from momentary power interruption (brown out) which recovers some of the call processing from the point of interruption and does not affect the contents of RAM. Any data base changes, modifications, or enhancements remain in the operating data base. A RESET must be done whenever a line, trunk, or application specific card is replaced.

  To manually initiate a RESET restart: Push the Restart button for approximately 5 seconds.

Table 7.1 lists the state of the alarm lamps after each type of restart (manual and system-initiated automatic).

Table 7.1 Alarm States After Restart

TYPE OF RESTART	STARTING TRIGGER	ALARM STATES*		
		RUN	TO	ALM
COLD restart (toggle UP) Reinitializes data base to default values. It is necessary to reprogram or reload data base from tape.	Power on (Battery discharged)	ON	OFF	OFF
	Manual	ON	OFF	OFF
	Automatic Restart (Battery discharges, data base is lost)	ON (Note)	OFF	OFF
HOT restart (toggle DOWN)	Power on	ON	OFF	OFF
	Manual	ON	OFF	OFF
	Automatic Restart (Fault Timer overflow)	ON (Note)	ON	OFF
Reset restart (toggle CENTER)	Manual	ON	OFF	CON
	Automatic Restart	ON	OFF	CON

*Types of alarms:

a. ON: Lamp is steady on.
b. OFF: Lamp is steady off.
c. CON: Lamp indicates the last status. To Turn OFF the alarm, initiate a HOT restart or read through the list generated in the Fault Log. The Alarm will turn OFF at the end of the fault log listing if there is no current fault found in the clock, battery, terminal, or RS-232C port.

NOTE: When the restart count exceeds its threshold level (16), the RUN lamp is turned OFF by the system.

System CPM Software Initialization

7.2.2 When the system is first powered up, software programming must be loaded into the system. The system operating program and the default data base are loaded by initiating a COLD restart. The ODDB must now be loaded into the system using the PMP (Portable Maintenance Panel).

Initializing the PMP Using Cassette Tape

7.2.3 Initially, or if the PMP batteries have been allowed to discharge, the PMP control program must be loaded into the PMP memory. Once the program is loaded, it should not be necessary to reload the program unless the batteries discharge. Using the PMP charging unit will not interfere with operation of the PMP control program. The initialization can be skipped if the control program is already in the PMP. See specific CMC (Change and Maintenance Code) commands in section TL-120201-1001 Data Base.

Perform the following procedures to load the PMP control program from tape.

1. Power on the PMP by pressing the <POWER ON> switch located on the right side of the PMP.

2. The PMP will display the program menu:

```
CTRL/@ INITIALIZE
   1 MONITOR
   2 BASIC
```

3. Press the <CTRL> and <@> keys simultaneously. The PMP will display the following screen which prompts for year, date, and time:

```
ENTER DATE AND TIME
MM DD YY HH MM SS cr
=
PRESS BREAK TO ABORT
```

4. Type the year, date, and time (for example:070885084500) and press the <RETURN> key. The PMP will display the following:

```
CTRL/@ INITIALIZE
   1 MONITOR
   2 BASIC
```

5. Press the numeric 2 key to run the program named BASIC. DO NOT PRESS <RETURN>.

6. Push the tape drive cover release (on the right side of the PMP) to open the tape drive.

7. Insert the PMP control program microcassette (version V06 for PMPs without a disk drive or version FDV02 for PMPs with a disk drive).

8. Close the tape drive.

9. Type WIND and press <RETURN> to rewind the tape.

10. Type RUN "CASØ:LOADER" and press RETURN (making sure the numeric zero is used for the first Ø in the command). The PMP will display the following:

```
WIND
RUN "CASØ:LOADER"
SEARCHING
```

Then:

```
RUN "CASØ:LOADER"
SEARCHING
FOUND: LOADER
```

which indicates the machine code and PMP control program are being loaded.

11. Wait approximately 5 minutes. When the tape has finished moving, the cursor will appear on the screen:

```
RUN "CASØ:LOADER"
SEARCHING
FOUND: LOADER
≥
```

12. Type TITLE "PMPCTRL" (exactly as shown) and press <RETURN>. This will identify the PMP control program on the main menu. The PMP will display the following:

13. Type MON and press <RETURN>. The PMP will display the following:

```
SEARCHING
FOUND: LOADER
TITLE "PMPCTRL"
```

```
A = ØØ B = 6E X = AB1C
C = C4 S = 3CEC P = A3B5
```

14. Type K3 DO NOT PRESS THE <RETURN> KEY.

    NOTE: The number three (3) in this entry can vary. It identifies the numeric order of the programs in the PMP. The main menu displays all stored programs in order. If three programs already exist, 3 cannot be used in this entry. Enter the next available number sequence instead of 3.

15. Press the <CTRL> key and <@> key simultaneously. DO NOT PRESS THE <RETURN> KEY.

16. Turn the power off and then on. A screen displaying the main program menu and copyright information will appear briefly, then disappear. The PMP port configuration will be displayed. This confirms that PMPCTRL has been loaded properly.

NOTE: It is advisable to make a copy of the PMP control program for back-up purposes. Refer to **Making Back-up Copies of the PMP Control Program**.

Save PMP Control Program to Tape

7.2.4 If a second PMP control program tape is desired as a protection copy, the following procedure can be used after the control program has been loaded into the PMP:

1. Set the power switch on the PMP to ON (the port configuration menu is displayed).

2. Press the BREAK button to forcibly terminate any program that the system attempts to execute.

3. Type LOGIN 2. Then press RETURN. The cursor appears on the display.

4. Insert the control program tape into the cassette.

5. Type WIND. Then press RETURN. The tape rewinds.

6. Type LOAD"CASØ:LOADER". Then press RETURN. The tape moves.

7. Remove the program tape and insert a blank leaderless tape.

8. Type WIND. Then press RETURN. The tape rewinds.

9. After the tape stops and the cursor appears, type RUN2. Then press RETURN. The tape moves. After the tape stops, the display reads:

```
RUN2
≥
```

10. Type SAVE"CASØ:PMPctrl.BSC". Then press RETURN. The tape moves.

11. After the tape stops, remove the tape from the tape drive.

12. If additional tapes are to be made, perform step 3 then start the procedure at 7.

Save ODDB Using PMP Floppy Diskette Option

7.2.5 If the PMP is equipped with the floppy diskette option, the diskettes can be used to save the ODDB in the same manner as the PMP control program tape is saved to cassette tape.

1. Configuration and connection

   a. Set bit 4 of the dip switch in PMP to on. The dip switch is well inside and to the left as viewed when opening the lid of the bottom panel.

   NOTE: Disk BASIC cannot be activated if bit 4 of the dip switch is off.

   b. Connect PMP and disk drive.

   NOTES:

   1. PMP must have an expansion RAM (Expansion unit H20EU).

   2. Turn the power switches of the PMP and disk drive off before inserting or removing connectors.

2. Use the PMP to SAVE or LOAD the ODDB to the floppy diskette. This program is supplied in microcassette tape. Commands for the floppy diskette, other than LOAD/SAVE, operate the same way as microcassette tape commands.

   a. PMP start up

1. Turn the disk drive power switch on.

2. Set the system disk (the EPSON Disk BASIC that comes with the disk drive) in drive A of the disk drive and check that the drive select LED blinks, indicating that the DOS program has started.

3. Turn the PMP power switch on. Check that the drive select LED blinks again, indicating that disk BASIC is booted on the PMP.

The initial screen (PORT CONFIGURATION) will be displayed at the PMP. Enter the command mode.

b. Preparation of floppy diskettes for SAVE and LOAD operation

- One SAVE floppy diskette can hold data for one save operation using a sequential file.

- The SAVE floppy diskette must be initialized or have been used in a previous SAVE operation. SAVE data on a diskette used previously will be overwritten by new data. Complete the following procedure if the floppy diskette has not been initilized. If the floppy diskette has been initialized, go to step 4.

3. Floppy diskette initialization

a. Put the PMP in the BASIC mode by turning power on, displaying the initial screen, and pressing the BREAK key.
b. Set the floppy diskette to be initialized in disk drive drive A.
c. Enter FORMAT "A:" RETURN.
d. When "Are you sure?" is displayed, enter Y.

4. LOAD procedure

a. Put the PMP in the command mode.
b. Enter CMC = 703 (Guard release: A02 file only).
c. Enter CMC = 902.
d. Enter LOAD on P1 and press the ADD/CHG button.
e. Set the floppy diskette to be saved in disk drive drive B.
f. Depress PF9 (SHIFT + PF4).
g. Check that the save date and file version are displayed. Then press PF9. The switching system will be placed in off-line mode automatically, stopping all the switching operation.
h. The switching system TO lamp will light after loading ends. Perform a HOT restart. The PMP screen will display "SECURITY CODE = ". Enter the security code to set the system in the command mode.
i. Use CMC = 801 to check the load end history. Then turn the TO lamp off. Load end history.

5. SAVE procedure

   a. Put the system in the command mode.
   b. Enter CMC = 903.
   c. Enter SAVE on P1 and press the ADD/CHG button.
   d. Set the floppy diskette for SAVE in disk drive drive B. (Make sure a floppy diskette is in drive A, too.)
   e. Press PF9 (SHIFT + PF4).

   NOTE: The system disk or any disk must be physically installed in drive A.

6. OPERATION (How to load and eject diskette)

   a. Turn the power switch on or off.

      1. The disk drive power switch is on the rear panel.
      2. To power up for operation, power up the disk drive first, then power up the PMP.
      3. To power down, shutdown the PMP power first, then shutdown the disk drive power.

Floppy Diskette Loading

Load the floppy diskette as follows:

1. Ensure that the drive pushbutton is off.
2. Slowly insert the floppy diskette into the drive with the write protect notch up and the diskette label to the right (Figure 7.6).
3. Push the floppy diskette in until a click is heard and the drive eject lock pops out (Figure 7.7).

   NOTE: The disk drive may fail to operate or may operate improperly and damage the floppy diskette if the diskette is not properly inserted.

4. Press the drive eject pushbutton in slowly until it engages.

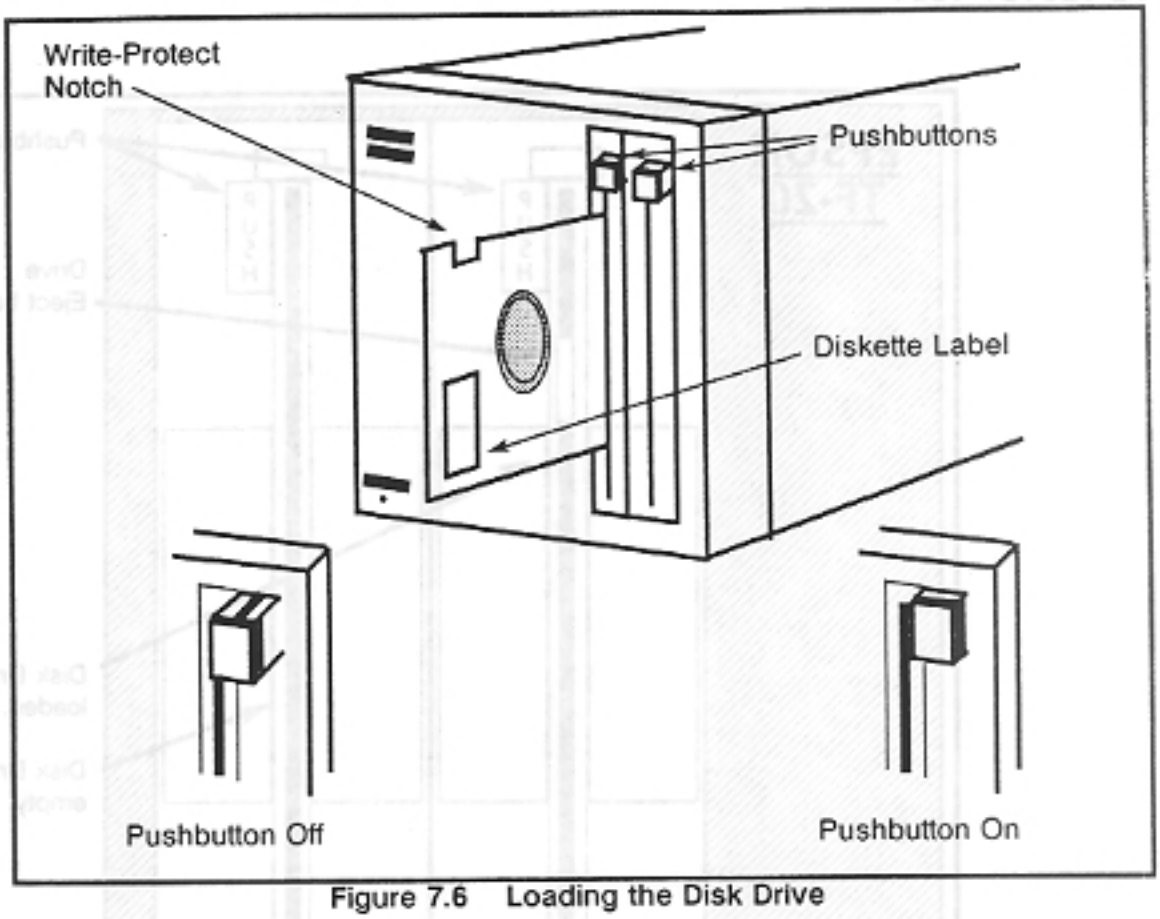

Figure 7.6 Loading the Disk Drive

Floppy Diskette Ejection

Eject the floppy diskette as follows:

1. Check that the drive select LED of the drive containing the floppy diskette is off. If it is on, wait for the current read or write process to end.
2. Press the drive eject pushbutton in so that it pops out to the off position (Figure 7.8). The floppy diskette will be ejected 2 to 3 cm.
3. Slowly remove the floppy diskette from the drive.

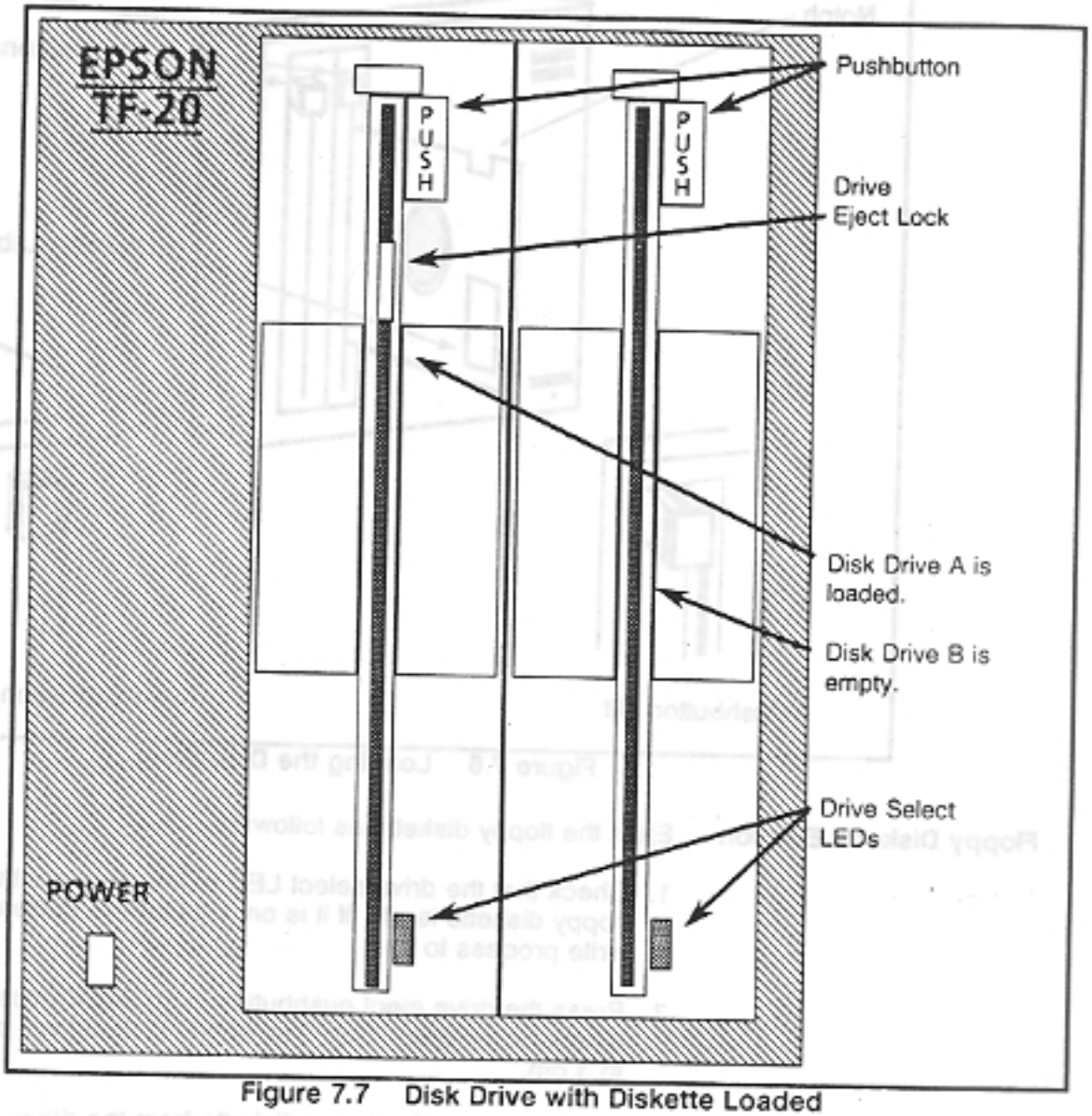

Figure 7.7 Disk Drive with Diskette Loaded

NOTES:

1. Insert the floppy diskette carefully.

2. Check that the write-protection notch is up (with the standard label at right) before inserting the floppy diskette. Otherwise, the disk drive will not operate.

3. Ensure the drive select LED is off before ejecting the floppy diskette. Otherwise, data on the floppy diskette may be lost or the diskette damaged.

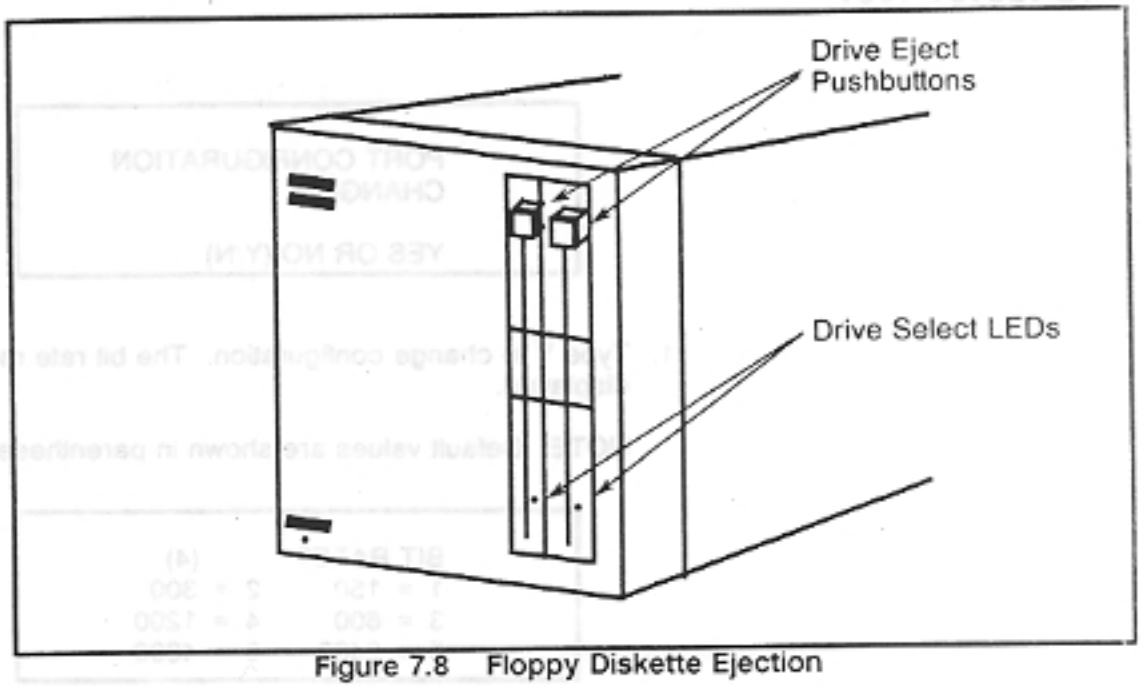

Figure 7.8 Floppy Diskette Ejection

Checking PMP Port Configuration for Serial Communications Port or Modem Use

7.2.6 This paragraph describes the procedure for checking the serial port to ensure that port parameters match the PMP or, in the remote application (as shown in Figure 6.1) , the auto-answer modem.

The PMP control program port configuration is preset to match the PMP port to the system default values for the RS-232C port at CN13, I/O. If the PMP will be remoted with a modem, the PMP parameter must be checked/changed to match the modem characteristics. The CMC commands for changing the system port configuration are given at CMC 900 as described in TL-120301-1001 Data Base .

CAUTION

The procedure listed below changes the port configuration on the PMP. The two ports must match for communication between the PMP and the system. Cycle the PMP OFF and ON to return to the default port configuration.

The following procedure is used to display the screens that represent the port configuration default values. After completion of the initialization procedures described in paragraph 7.2, the following PMP port configuration screen is displayed.

```
PORT CONFIGURATION
CHANGE?

YES OR NO (Y/N)
```

1. Type Y to change configuration. The bit rate menu is displayed.

   NOTE: Default values are shown in parentheses.

```
BIT RATE?          (4)
1 = 150        2 = 300
3 = 600        4 = 1200
5 = 2400       6 = 4800
```

2. Enter the desired number (1-6) and press RETURN. The number in parentheses changes to the entered value. Press RETURN to enter default. Default = 4 (1200 baud).

CAUTION

Line speed must be less than 1200 baud for CMC command communication or call processing will be interrupted. Higher rates can be used for loading tape data to the system, because call processing is stopped during the load program.

The stop bit menu is displayed.

```
STOPS BITS?      (1)
1 = 1          2 = 2
```

3. Enter 2 and press RETURN to change the stop bit parameter to 2 or press RETURN to enter the default value (1).

   The parity menu is displayed.

```
PARITY    (E)
O = ODD     E = EVEN
N = NONE
```

4. Enter the letter of your choice and press RETURN to change or press RETURN to accept the default value (E).

   The word length menu is displayed.

```
CHARACTER LENGTH?  (7)
7 = 7 bits
8 = 8 bits
```

5. Enter 8 and press RETURN to change or press RETURN to enter the default value (7).

```
BIT RATE              [4]
STOP BITS             [1]
PARITY                [E]
CHARACTER LENGTH      [7]
```

6. Ensure the configuration is correct.
7. Press any alpha/numeric key to return to step (1) for further changes or correction.
8. Press RETURN to enter new configuration screen values. The security code prompt is displayed.

```
SECURITY CODE = ___
```

9. Go to Step 4 of the following paragraph (paragraph 7.2.7).

PMP Operational Overview

7.2.7 After the PMP has been initialized and contains the PMP control program in memory, the PMP can be locally or remotely connected to the system and used as the Portable Maintenance Panel. The Data Base section provides a detailed discussion of the CMC command operation. The following procedure

describes the screens and operations up to the point of CMC entry.

1. Turn on the PMP. A screen displaying the main program menu and copyright information will appear briefly, then disappear. The PMP will display the port configuration screen:

```
PORT CONFIGURATION
CHANGE?
YES OR NO (Y/N)
```

2. Type N. DO NOT PRESS <RETURN>. This will skip the port configuration screens and assume the default values which are preset to match the system default port 0 configuration:

3. The PMP will display the security code prompt.

```
SECURITY CODE =
```

4. Enter the desired security code and press the <RETURN> key. The security code will not appear (echo) on the screen.

   a. If the security code is not accepted, the PMP will display:

```
SECURITY CODE =
ERROR
```

   b. If another terminal has access to the system (a modem, MCT, or another PMP connected to CN14), the PMP will display:

```
SECURITY CODE =
BUSY
```

c. If the security access has been cleared, the following screen will appear, indicating the user is now in PMP command mode:

```
CMC = #####
COMMAND READY
```

Entering CMC Commands

CMC commands can be entered from the following display:

NOTE: The cursor must appear on the display to enter commands.

```
CMC = ____
COMMAND READY
```

5. Enter the desired CMC command (refer to Data Base TL-120301-1001).

6. To terminate command entry mode and load the command, press PF6, then shift and PF1. Pressing any key returns the users to the port configuration menu.

Remote PMP Operation

7.2.8 The following procedure describes the operation of the remote PMP using an auto answer modem connected to the system communications port.

1. Ensure the modems at the system site and remote site are compatible.

2. Ensure a modem is connected to the system. RS-232C cable length must be within 25 feet. (Pinout information is contained in Appendix I.)

3. Ensure power is ON for the modem connected to the system.

4. Ensure power is ON for the system.

5. Ensure the port configuration matches manufacturer's data for the modem.

6. After the modem communications link has been validated, the PMP is connected to the remote modem.

7. Remote PMP operation is identical to local PMP operation.

Using the PcMP to Load/Save the ODDB

7.2.9 This paragraph describes the general procedures for using a local or remote PcMP to input/save the ODDB. Refer to the applicable PcMP installation and maintenance software documentation.

Saving the ODDB Using the PC

7.2.10 A copy of the ODDB should be made using the PC and the SAVE function from I&M system software as outlined in the applicable documentation.

Loading the ODDB Using the PC

7.2.11 Load the ODDB using the LOAD function from I&M System diskette one as outlined in the applicable software documentation.

Using the MCT (Master Control Telephone) for System Changes

7.2.12 The MCT (Master Control Telephone) is a CSD telephone or Attendant Console that can be used to input CMC commands. On a default basis, upon initialization, the first four CSDs (according to equipment number) are assigned as MCTs. This default assignment can be changed with CMC 702.

The MCT can be used for on-site entry of CMC commands. The system can accommodate up to 20 MCTs (Package D), but only one MCT or PMP can be activated as a CMC command entry device at one time.

CSD:MCT Operation

7.2.13

1. Select a CSD in the idle state (on-hook, not engaged in a call, in call hold or camp-on) and enter the security code using the keypad. If the CSD is used as an MCT, the time/date display will be replaced by a cursor (all dot pattern).
2. When the CSD enters into the command mode. The display shows:

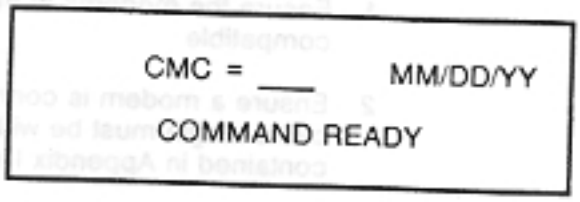

CMC commands can now be entered. The functions of the keys are shown in Figure 7.9 and Table 7.2.

3. Pressing the RLS key and then the TRM key returns the MCT to the call processing mode.

Attendant Console Used as an MCT

7.2.14 The Attendant Console can also be used as an MCT when it is in the Position Busy mode, and then entering the correct security code.

Once in the position busy mode, the operation of the Attendant Console as an MCT is the same as for the CSD telephone in the MCT mode.

The button function of the Attendant Console in the MCT mode is shown in Figure 7.10 and Table 7.3.

1. To exit from the MCT mode of operation, press the RSL (release) key.

2. Press the TRM (Terminate) key.

3. When the LCD displays POSITION BUSY, press the POSITION BUSY soft key to return to the call processing mode.

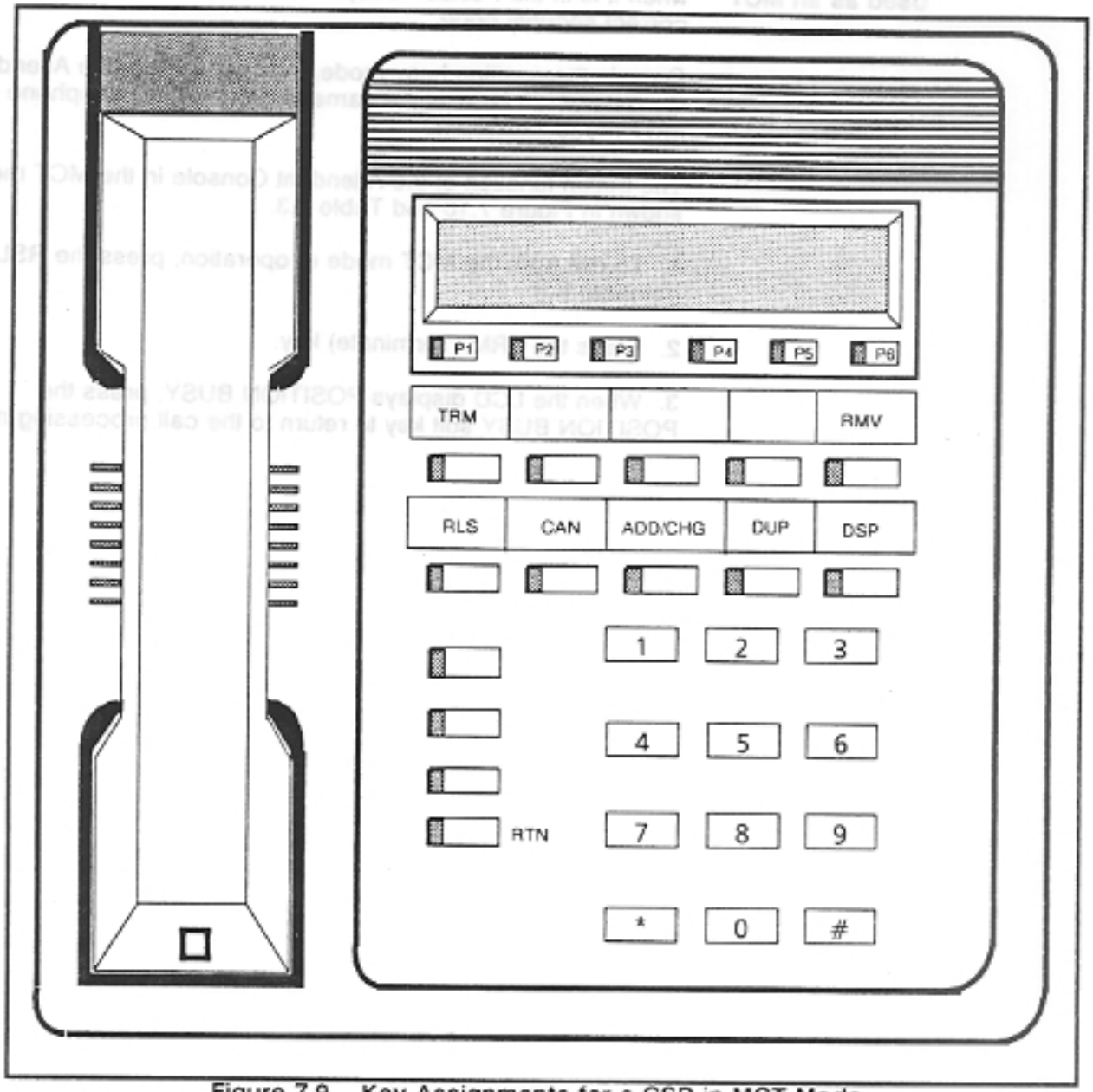

Figure 7.9 Key Assignments for a CSD in MCT Mode

Table 7.2 CSD/MCT Function Keys

Function Key Assignments	Description
Return/RTN	Required as a prompt to the system after typing the security code or CMC three-digit number. Can be used to move the cursor to the next parameter position.
Release/RLS	Permits exit from a command at any time. Useful to change to another command or exit from an error condition.
Terminate/ TRM	Terminates the command mode. (RLS must be used before using TRM.)
Cancel/CAN	Cancels a keyed in P value. Useful to erase typing errors. Will not delete a value from memory. (Can be used to enter a blank P value.)
ADD/CHG	Writes (enters) the typed P values into data base memory. In some tables, RMV must be used to delete old values before pressing ADD/CHG. PMP screen indicates whether the values were added or changed.
Duplicate/ DUP	Increments the table's key parameter(s) while causing the remaining P values to stay the same as on the previous screen. Useful for entering repetitive P values such as station and trunk data.
Display/DSP	Required as a prompt to the system after entering displayable CMC commands. Shows P values of a table. If no value exists for a parameter, the P value is blank. Depressing DSP a second time increments the main parameters, and their P values are displayed. Depressing DSP at the end of a table listing either displays the first P value again or releases the table by exiting.
Remove/RMV	Deletes all P values from a table. Required at some tables before entering new values.

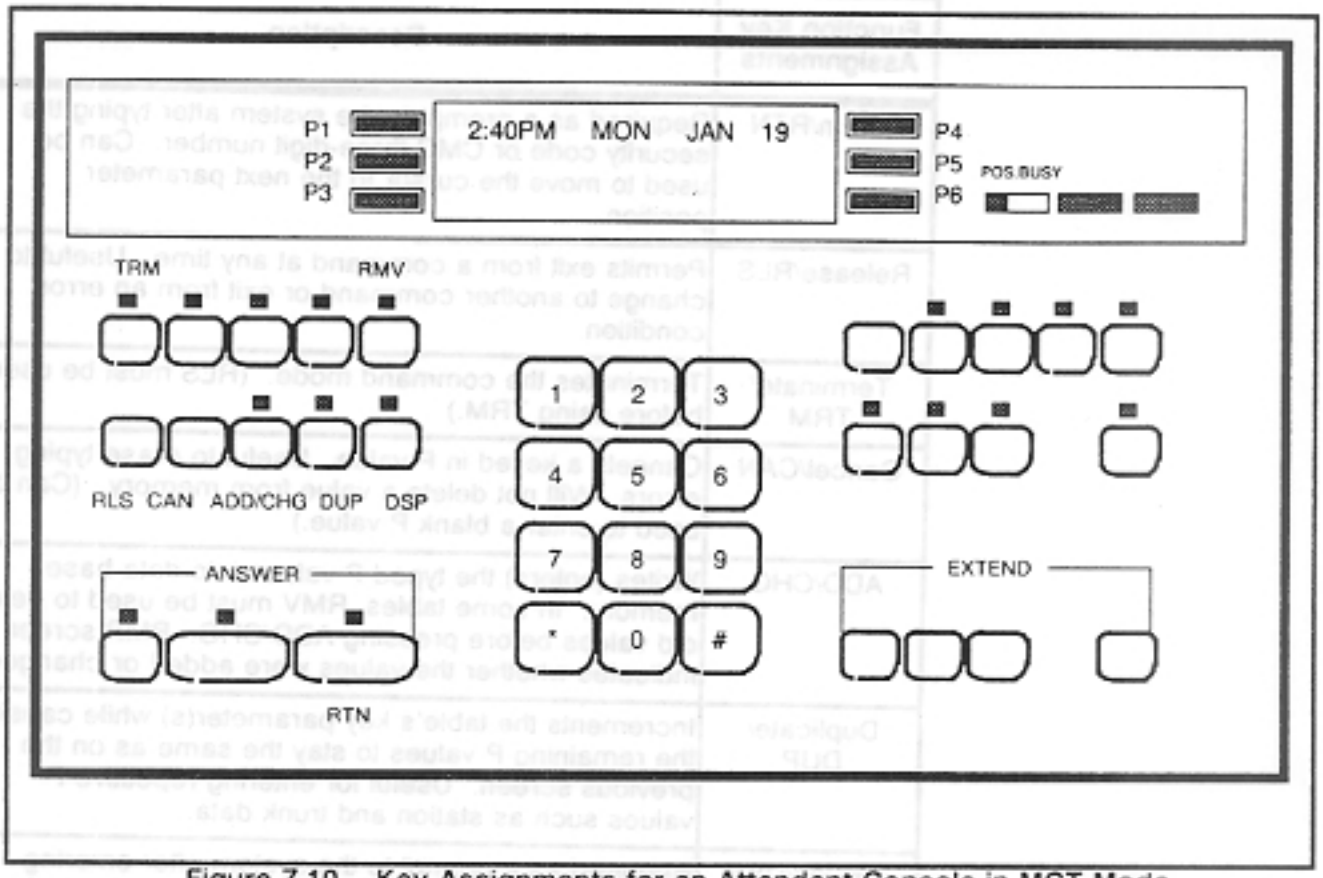

Figure 7.10 Key Assignments for an Attendant Console in MCT Mode

Table 7.3 Attendant Console/MCT Function Keys

Function Key Assignment	Description
Return/RTN	Required as a prompt to the system after typing the security code or CMC three-digit number. Can be used to move the cursor to the next parameter position.
Release/RLS	Permits exit from a command at any time. Useful to change to another command or exit from an error condition.
Terminate/ TRM	Terminates the command mode. (RLS must be used before using TRM.)
Cancel/CAN	Cancels a keyed in P value. Useful to erase typing errors. Will not delete a value from memory. (Can be used to enter a blank P value.)
ADD/CHG	Writes (enters) the typed P values into data base memory. In some tables, RMV must be used to delete old values before pressing ADD/CHG. PMP screen indicates whether the values were added or changed.
Duplicate/ DUP	Increments the table's key parameter(s) while causing the remaining P values to stay the same as on the previous screen. Useful for entering repetitive P values such as station and trunk data.
Display/DSP	Required as a prompt to the system after entering displayable CMC commands. Shows P values of a table. If no value exists for a parameter, the P value is blank. Depressing DSP a second time increments the main parameters, and their P values are displayed. Depressing DSP at the end of a table listing either displays the first P value again or releases the table by exiting.
Remove/RMV	Deletes all P values from a table. Required at some tables before entering new values.

THIS PAGE IS INTENTIONALLY LEFT BLANK.

SYSTEM VERIFICATION AND VALIDATION

8.0 This section describes the procedures for verifying, testing, and initializing the completed site installation. These are the last procedures performed before the installed system is cut over for customer use.

Installation Validation Checklist

8.1. The following installation validation checklist is a quick-reference review of the procedures and sequence for installation of the system. The installer should verify that the basic sequence was followed and that all applicable steps were performed.

The test should verify the proper operation of all system features and all possible line-to-line, line-to-trunk, trunk-to-line, and trunk-to-trunk connections in the installation.

1. Unpack the equipment cabinet, mounting bracket, power cable, common control cards, line and trunk cards, and RGEN (if ordered).
   a. Visually inspect the unit for unacceptable conditions.
   b. Visually inspect the cabinet for any loose wires or unacceptable conditions.
   c. Ensure that the Line and Trunk cards agree with CSS sheets. Note any discrepancies.
2. Unpack the power supply.
3. Install the wall mounting bracket.
4. Mount the equipment cabinet(s).
5. Mount power supply unit.
6. Ground the system.
7. Ensure placement of the back-up battery.
8. Power-up the system.
   a. Visually inspect the card slot connections.
   b. Connect the cabinet to the power supply with the supplied cable.
   c. Connect the system to commercial AC power.
      1. Connect the power supply unit to AC power.
      2. Set the power switch on the power supply to ON.
      3. Ensure the OPE lamp on the power supply is steadily ON.
   d. Set the power switch on the power supply unit to OFF. Ensure the OPE lamp on the power supply is OFF.
   e. Install the cards.
9. Install the cable from the cabinet to the CDF.
   a. Ensure the power is OFF.
   b. Connect the AMP connector to the first ICG group.

c. Label the cable with the group number.
d. Run the cable to the CDF.
e. Connect the wire pairs of the AMP connector to the CDF.
f. Label the CDF.
g. Proceed as above for remaining ICG groups.

10. Unpack and install peripheral instruments

a. Install the instruments.
b. Label all pairs.
c. Run and termination all pairs on the CDF.
d. Label the CDF.
e. Cross connect the CDF.
f. Connect 6PFT/6PFE instruments if applicable.

11. Power-up the system.

a. Ensure the system is connected to commercial AC.
b. Set the switch on the power supply Unit (marked INPUT) to ON.
c. Ensure the OPE lamp on the power supply unit is steadily ON. If OFF, see paragraph 2.

NOTES:

- If defective CCG cards are found after the initial start-up, the system power must be turned off before attempting to replace a defective CCG card. Initiate a COLD restart after the replacement card has been inserted in the cabinet and the system has been powered-on.
- If a defective line, trunk, or service function card is found after the initial start-up, a reset restart must be performed after the defective card is replaced.

Initialization of System Software

8.2 When the system is first initialized, a COLD restart is required to load the system operating program and data base management program from ROM to working RAM and EPROM memory. The COLD restart also loads the standard default data base. The standard default data base will assign three-digit station numbers to stations, trunks to groups, and COS and COR to stations and trunks. Button assignments will be made to a DSS/BLF connected to an 8EKC card in card slot 01 and paired with the EKT the next lower even numbered circuit, and to all EKTs associated with seated EKC cards. Unseated cards must be individually programmed. Review TL-120301-1001 Data Base for standard default data base to determine whether the ODDB can be more efficiently created by programming or by modifying the standard data base.

Power Supply Unit and CPM Controls and Indicators

8.2.1 Although the system controls and LED lamps were described in Section 7.0, they are re-introduced in Tables 8.1 and 8.2.

Table 8.1 Controls and Indicators on the Power Supply Unit

CONTROLS/ INDICATORS	DESIGNATOR	FUNCTION
Power switch	INPUT	Two position lock type switch which specifies the power on or off.
Power lamp	OPE	Glows steadily when the power supply is in proper working order.

Table 8.2 Controls and Indicators on the CPM Card

CONTROLS/ INDICATORS	DESIGNATOR	FUNCTION
Restart button	SET	Push button which activates the system restart.
CPM toggle switch	INS/RECO/CRS	Three position non-lock type switch which specifies the restart mode. INS: Initial start mode (COLD restart) RECO: Call recovery mode (Reset Restart) CRS: Clear restart mode (HOT Restart)
System running lamp	RUN	Glows steadily when the system is running without major problems.
System alarm lamp	ALM	Glows steadily when a minor problem occurs.
Timer overflow lamp	TO	Glows steadily when normal computer program sequencing is interrupted.

Initialize the operating program and data base as follows:

1. Locate the CPM card, slot 20.
2. Locate the CPM toggle switch.
3. Locate the restart button.
4. Initiate a COLD restart.

   a. Hold the toggle switch on the CPM card in the UP position while momentarily depressing the restart button.
   b. Release the toggle switch. The toggle switch returns to center location.
5. Observe the LED on the CPM card.

   a. Ensure the RUN lamp is steadily ON.

b. Locate the ALM lamp. Steady ON indicates a minor problem. Call processing should be uninterrupted. Isolate the fault if necessary (see TL-120201-1001 Maintenance).
c. Locate the TO lamp. Steady ON indicates a program sequencing interrupt (see TL-120201-1001 Maintenance).

6. Set the the system clock (RTS).

   Enter CMC 700 per TL-120301-1001 Data Base.

System Verification Tests

8.3. Proper operation of the installed system must be verified before it is cut over to customer service. System verification tests are performed in four stages to test intra-system features and connections (without telephone company connections), outgoing off-premises (telephone company type) connections, incoming DID (Direct Inward Dialing) trunk connections, and system options/customer equipment. The following User's Guides may be referenced:

- CI-484420 CS-10, CS-20, and Single Line Telephone User's Guide
- CI-484428 CSD User's Guide
- CI-484439 Attendant Console User's Guide
- CI-484440 CSD User's Guide for Front Desk Console Capabilities

If problems occur during the verification, see TL-120201-1001 Maintenance.

NOTE: The system can be tested using the default data base. The default data base assigns 3-digit station numbers to stations, trunks to groups, COS to trunks and stations (per TL-120301-1001 Data Base). If the default data base is not used, the system must be modified to customer specifications before verification.

Intra-system Features and Connection Verification

8.3.1 Verify system features and line side station-to-station type connections as follows:

1. Establish a call between stations to evaluate proper operation and voice quality. Next, place a call to an off-hook station to verify a busy signal.

2. Establish calls between the Attendant Console and all stations to evaluate proper operation and voice quality.

3. Establish local system data connections to verify data switching operation and terminal message quality.

4. Evaluate installation specific programmed or default features using an intercom system for interactive communications between test personnel and/or using a prepared test plan/schedule.

System Verification of Outgoing Trunks

8.3.2 Verify outgoing connections of the switching system as follows:

NOTE: CMC 802 can be used to select specific trunks for testing.

CO Trunk Verification

1. With off-premises test support, verify each outgoing CO trunk for continuity (connection) operation, call progress messages, and voice quality. Use CMC 802 to specify the proper port/trunk.

   a. Place a call to an off-premises tester from each station so that call origination and call progress displays can be verified.

   b. Evaluate the voice quality of the call.

   c. If applicable, evaluate modem pool operation.

FX Trunk Verification

2. Verify outgoing FX trunks using the above procedures and the CO trunk dialing and access codes.

Tie Trunk Verification

3. Test each specific Tie Trunk from a station using CMC 802 and associated network and CO numbering plans.

   a. Go off-hook and verify dial tone.
   b. Dial the access code for the Tie trunk to PABX A.
   c. Dial the access code which will seize a CO trunk from PABX A. Verify CO dial tone.
   d. Dial a known directory number or station.
   e. Evaluate the voice quality path.
   f. Go on-hook.
   g. Repeat the procedure for each Tie trunk.

Long Distance and/or WATS Trunk Verification

4. Test each outgoing long distance and/or WATS type trunk using CMC 802 and a known tester within the trunk band (area).

   a. Verify call origination, progress, and completion.
   b. Evaluate voice quality.

System Verification of Incoming Trunks

8.3.3 Verify incoming trunk connections through the switching system as follows:

CO and DID (Direct Inward Dial) Trunk Verification

1. Test incoming CO and DID trunk connection operation, call progress messages, and voice quality. Using CMC 802 to specify the proper port/trunk.

   a. Access an outgoing CO trunk and dial back to a local station so operations and call progress messages can be verified.

b. Have an off-premises tester dial a station through any DID trunk to verify operation and call progress messages.

c. Evaluate voice quality.

FX Trunk Verification

2. Verify FX trunks for the same attributes as CO trunks by having an off-premises tester call into a local station.

Incoming Long Distance or In-WATS Verification

3. Each incoming long distance or in-WATS trunk should be tested for the same attributes as out-WATS trunks by having on off-premises tester call into the station.

System Verification of Options

8.3.4 Customer-provided equipment used with system options such as music-on-hold and external paging, as well as the SMDR and Hotel/Motel printer options, should be tested and verified.

Post-Installation Procedures

8.4 All requisite site information should be entered in the Site Log, TL-120401-1001 after the system installation is completed and verified. It is extremely important to complete this step, because the site log will become the document of record for the installation.

The last step in the installation sequence before cutover to customer service is to ensure that all cables are dressed, fastened, and labeled, that cards are seated, etc., and that the site is clean and in order. A checklist is provided as follows:

1. Cables are labeled?
2. Cabinet and power unit are properly grounded?
3. Required cards are installed?
4. Cable connectors are installed and secured on cabinet connectors?
5. Cables are dressed, tied, and labeled as required?
6. Cabinet door is closed and secured?
7. Cartons and packaging have been removed?
8. Installation site is cleared?

THIS PAGE IS INTENTIONALLY LEFT BLANK.

SMDR (STATION MESSAGE DETAIL RECORDING) OPTION

9.0 This section describes the installation of the optional SMDR (Station Message Detail Recording) used to provide a hard copy of outgoing call records. The SMDR option is implemented through data base software as described in TL-120301-1001 Data Base and is supported by a printer connected to one of the system's serial communications ports. The printer is provided by the customer or the firm responsible for the system sale/installation. The system, therefore, provides for a variety of different printer characteristics. This section references CMC (Change and Maintenance Command) codes which are described in TL-120301-1001 Data Base.

Printer, Cable, and System Communications Port Characteristics

9.1 The SMDR printer is connected to the RS-232C communications port of the system in a manner similar to the PMP installation (see section 6.0). Three functional types of printers are supported by the system: (DTE (Data Terminal Equipment) mode printer with RTS (Request To Send), DTE mode printer without RTS, or DCE (Data Communications Equipment) mode printer. The system can accommodate a wide range of characteristics of each type of printer. This is accomplished by configuring the system communications port characteristics to match the printers.

Supportable Printer Characteristics

9.1.1 Table 8.1 lists characteristic and two options supported by the system (power ON/OFF, and XON/OFF).

System Communications Port Characteristics

9.1.2 The SMDR printer is connected to the equipment cabinet on RS-232C serial communication port number 1 at connector CN14. The standard default values for RS-232C port 1 are listed in Table 8.1. After the printer installation, the port characteristics must be set up to match those of the printers, using CMC 900 and 901 as described in TL-120301-1001 Data Base.

Printer Cable Requirements

9.1.3 This paragraph describes the functional cable pinout requirements for the three types of printers supported by the system. Diagrams are provided for each printer type, showing cable leads, RS-232C circuit abbreviations, and DB25 connector pin numbers. Additional cable information is contained in Appendix I.

- The pin-to-pin cable configuration for a DTE Mode printer are shown in Appendix I.
- The pin-to-pin cable configuration for a DCE mode printer is shown in Appendix I.

SMDR Option Installation

9.2 This paragraph describes the procedures for installing the SMDR option.

Table 9.1 Serial Communications Port Characteristics

ITEM	CHARACTERISTICS	STANDARD DEFAULT VALUE
Interface	RS-232C DTE mode	
Speed	Asynchronous 110/150/300/600/1200 bps	300 bps
Code	7 bit ASCII	7 bit ASCII
Parity	NONE/ODD/EVEN	EVEN
Character length	7 bit/8 bit **NOTE:** When 8 bit is selected, the most significant bit must be space or zero.	
Stop bit	1 bit/2 bit	1 bit
XON/XOFF option	Available	No
Power on/off option	Available	No

SMDR Printer Installation

9.2.1 The SMDR printer is installed as follows:

1. Unpack and set up the printer per the manufacturer's documentation.
2. Depending on the type of printer; verify the printer cable pinout as described in paragraph 8.1.3 using a volt-ohmmeter continuity test and/or the manufacturer's documentation. Tag the cable, indicating the printer-end and system-end. Additional cable pinout information is contained in TL-120201-1001 Maintenance. Maximum allowable cable length is 16 feet.
3. Install the printer cable-end to the RS-232C port on the printer securing with screws.
4. Install the system cable-end to port 1, connector CN14, securing with screws.
5. Install the printer paper, ribbon, and etc. per manufacturer's documentation.
6. Power on the printer per manufacturer's documentation.

System Communications Port Configuration

9.2.2 After the printer is installed, the system port must be configured to match the printer characteristics.

1. Set the following parameters to match the printer's characteristics using CMC 900 and the printer manufacturer's documentation:

   P1 Port - 1
   P2 Speed (bit/baud rate)
   P3 Code
   P3 Parity
   P4 Character Length (for 8 bit -- most significant bit equals space or zero)
   P5 Stop bit
   P6 Echo Back

2. Set the following parameters to match the printer's characteristics using CMC 901 and the printer manufacturer's documentation.

   P1 Port - 1
   P2 XON/XOFF Option-If Printer supports - see paragraph 8.2.3.-If printer does not support, set to NO.
   P3 Power control Power On/Off Option-If Printer supports - see paragraph 8.2.4. If printer does not support, set to NO.
   P4 Power On Timing
   P5 Power Off Timing
   P6 Printer Format

Printer XON/XOFF Option

9.2.3 The system has the ability to provide an XON/XOFF option to start/stop character transmission from the system to the printer. If the system receives an XOFF character from the printer, the system stops transmitting characters immediately. This may happen when there is no paper in the printer. After adding paper, the printer status is set to receive characters and the printer sends the XON character. When the XON character is received by the system, characters are again sent to the printer. XON/XOFF character can be selected using CMC 901:

Using the Printer Manufacturer's documentation, select/set the XON/XOFF character from the following two patterns:

- Pattern 1: XON/DC1 XOFF/DC3
- Pattern 2: XON/DC2 XOFF/DC4

NOTES:

1. DC1, DC2, DC3, and DC4 are ASCII code characters.
2. The system automatically resets to XON character 30 seconds after receiving an XOFF character in cases where XON is not received (e.g., transmission error).

Printer Power ON/OFF Option

9.2.4 If the printer has the ability to provide power on/off control, power on/off option can be selected by using CMC 901. When this option is selected, the system controls the printer as follows:

Before transmitting the SMDR message, the system sends the power-on character to the printer. After the power-on timing period, the system starts transmitting the SMDR message to the printer. If there is no SMDR message during the power-off timing interval from the last SMDR message, the system sends the power-off character to the printer.

1. Using the manufacturer's documentation and CMC 901, select and set the power ON/OFF characters from the following ASCII characters:

- Power-on character: NUL, DEL, ESC + H.
- Power-off character: NUL, DEL, ESC + J, not assigned.

2. Using the manufacturer's documentation and CMC 901, select and set the power ON/OFF timing from the following ranges:

- Power-on timing: 0.2 to 51 seconds (200 ms increments).
- Power-off timing interval: 0 to 2,550 seconds (10 sec increments).

SMDR Operation

9.3 This paragraph describes the operational aspects and printer message formats of the SMDR option. Topics covered include message formats, message screening, and loading the printer paper.

SMDR Message Format

9.3.1 The SMDR message format per call and the system messages are presented in the following paragraphs.

SMDR Call Format

The SMDR message format per call is shown below:

```
HH:MMHH:MM.SSTT DDDDTDDDDAAAA DDDDDDDDDDDDDDAAAAAAAAAAAAAAAA TT GGG
 (1)    (2)   (3)  (4)   (5)   (6)          (7)                (8)          (9) (10)
```

(1) = Time of call origination
(2) = Duration of call
(3) = Calling party identification:
ST = Station DD = DID trunk
AT = Attendant DS = DISA trunk
TI = TIE trunk DT = Data line
(4) = Originating station number
(5) = Trunk identification and trunk number:
T + C = CO trunk + DDD = Trunk number
T + F = FX trunk + DDD = Trunk number
T + W = WATS trunk + DDD = Trunk number
T + T = Tie trunk + DDD = Trunk number
(6) = Trunk access code (Also, when the line button on EKT is used, the access code is output.)
(7) = Directory number dialed and personal accounting code (maximum 20 digits)

(8) = Account code (If not specified, no code is output)
(9) = Tenant number (If not specified, no tenant number is output)
(10) = Metering group (If not specified, no metering group is output)

Message Screening

9.3.2 System messages are output as a supplement to call base messages. The following shows the system messages and descriptions.

Time and Date Change

This message is printed out just before the first SMDR message in an hour to indicate time and date and separate the SMDR messages. Time increments by hour. The format is as follows:

HH:MM MM/DD/YY

Where

HH:MM = Time

MM/DD/YY = Date

System Restart

When a COLD restart or HOT restart occurs, the system restart message with date is output as follows:

```
SYSTEM READY MM/DD/YY
```

Power Failure

When a power failure occurs during an output, the power failure message is output after restoration of power as follows:

```
POWER FAIL
```

Printer Failure

When an SMDR printer failure occurs during output, the printer failure message is output after the printer is put back on-line:

```
PRINTER FAIL
```

Clock Failure

When the clock RTS (Real Time Source) on the CPM card fails, the clock failure message is output as follows:

```
CLOCK FAIL
```

This message is output with each SMDR message during clock failure. The time and date items in the SMDR message may show all zeros.

Priority

The above SMDR call messages and system messages follow an output priority. The following shows the priority from highest to lowest:

(a) System restart message
(b) Power failure message
(c) Printer failure message
(d) Clock failure message
(e) Time and date change message
(f) SMDR message

Loading SMDR Printer Paper

9.3.3 Particular problems and solutions are specific to each printer. End-of-Paper is a common problem and is presented here. Other problems are dependent upon the printer used at each site.

When the SMDR printer runs out of paper, it is imperative that it be reloaded as soon as possible to prevent loss of call detail (system SMDR buffer capacity is approximately 100 calls). The following action must be taken immediately.

Reload Printer Paper as follows:

- Printer with XON/XOFF option. This type of printer notifies PAPER END to the system by means of XOFF character. Change the paper to restart printing.

- Printer with line disconnect option. This type of printer notifies PAPER END to the system by means of line disconnect. Change the paper to restart printing. The printer failure message will be output first after changing paper.

- Printer without paper end alerting function

  a. This type of printer continues to output SMDR message or system messages even if paper ends. Turn the printer power OFF immediately. Change the paper. Turn the printer power ON. The messages that were printed out during paper end will have been erased from the system and cannot be retrieved.

  b. If there is enough time before the paper ends, enter the CMC command (CMC 705) to BUSY OUT the printer. Change the paper quickly while the system holds the call messages in its buffer. Enter the CMC command (CMC 705) and place the printer in-service.

THIS PAGE IS INTENTIONALLY LEFT BLANK.

Hotel/Motel Printer Option

10.0 This section describes the installation of the optional Hotel/Motel printer used to provide hard-copy output of call records for Hotel/Motel applications. The Hotel/Motel option is implemented through data base software as described in TL-120301-1001 Data Base, and is supported by one or two printers. The printers are connected to the system using a DIU (Data Interface Unit) or CSD with DTA (Data Terminal Adapter). The system interface for the Hotel/Motel printer is the 4CHT (Character Trunk) card. Since the printer can be provided by the customer or by the firm responsible for the system sale/installation, the system provides support for a variety of printer characteristics. This section references CMC (Change and Maintenance Command) codes which are described in TL-120301-1001 Data Base.

Printer, Cable, and DIU/DTA Port Characteristics

10.1 Two Hotel/Motel printers can be connected to the RS-232C connectors of DIUs or DTAs as described in section 5.0. Two functional types of printers are supported: (DTE (Data Terminal Equipment) mode printer with DTR/RTS (Data Terminal Ready/Request To Send), or DTE mode printer without DTR/RTS. The system can accommodate a wide range of characteristics of each type. This is accomplished by configuring the DIU/DTA port characteristics to match the printers.

Supportable Printer Characteristics

10.1.1 Table 10.1 lists printer characteristics and two options supported by the system.

DIU/DTA/Port Characteristics

10.1.2 An example of how the Hotel/Motel printer(s) are connected to the switching system is shown in Figure 10.1. After the printer(s) is installed, the serial port characteristics must be set to match those of the printers (see TL-120301-1001 Data Base manual).

Table 10.1 Hotel/Motel Printer Requirements

ITEM	REQUIREMENTS*
Interface	RS-232C, DTE mode
Speed	Asynchronous, up to 19.2 Kbps
Code	7 bit ASCII
Parity	NONE/ODD/EVEN
Character length	7 bit/8 bit**, 80 characters
Stop bit	1 bit/2 bit
XON/XOFF option	Not available
Power on/off option	Not available

* The configuration can be modified to match the characteristics of the installed printer by using CMC commands (CMC 222, 223).

** When 8 bit is selected, the most significant bit must be a space or a zero.

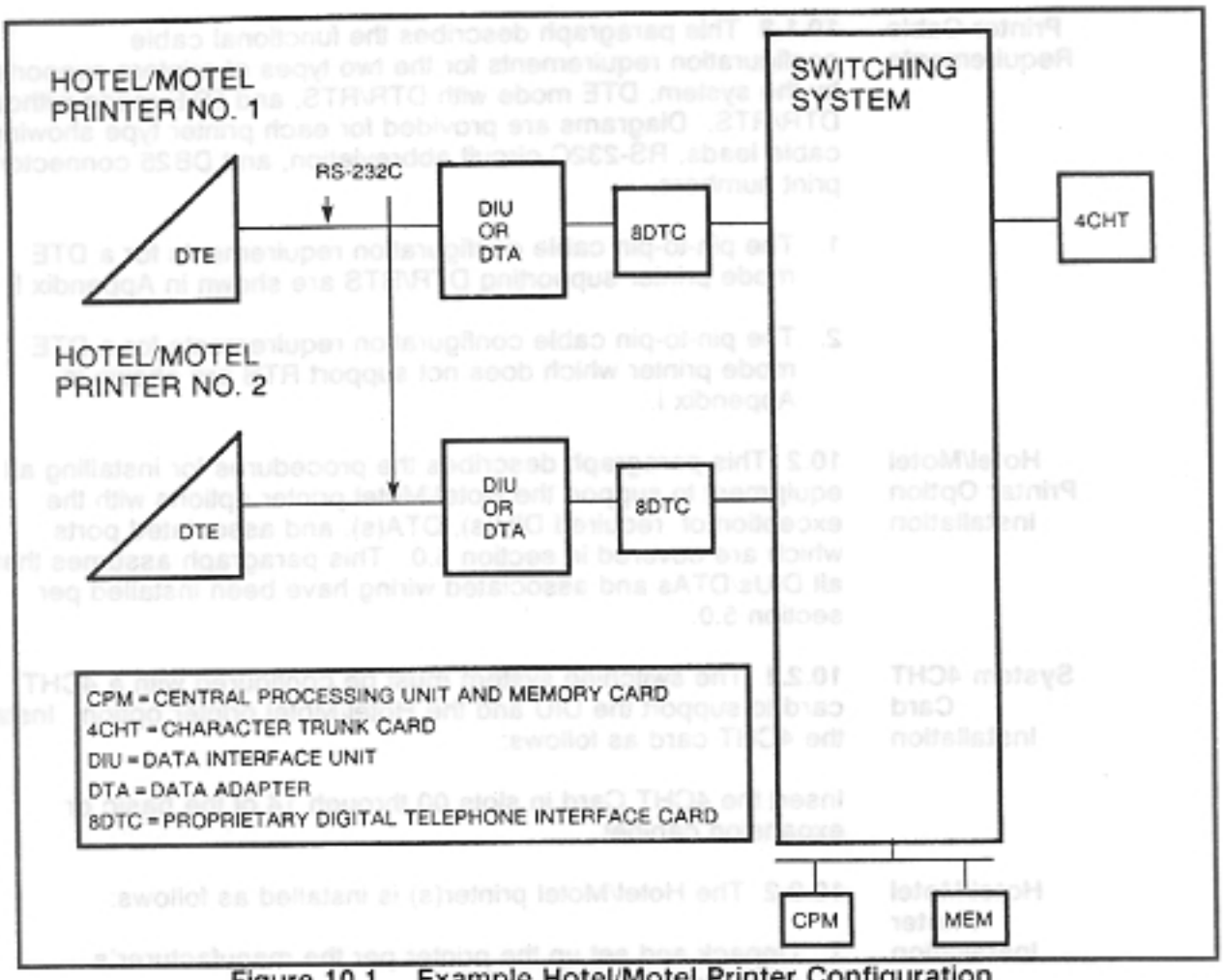

Figure 10.1 Example Hotel/Motel Printer Configuration

Printer Cable Requirements

10.1.3 This paragraph describes the functional cable configuration requirements for the two types of printers supported by the system; DTE mode with DTR/RTS, and DTE mode without DTR/RTS. Diagrams are provided for each printer type showing cable leads, RS-232C circuit abbreviation, and DB25 connector print numbers.

1. The pin-to-pin cable configuration requirements for a DTE mode printer supporting DTR/RTS are shown in Appendix I.

2. The pin-to-pin cable configuration requirements for a DTE mode printer which does not support RTS are shown in Appendix I.

Hotel/Motel Printer Option Installation

10.2 This paragraph describes the procedures for installing all equipment to support the Hotel/Motel printer options with the exception of required DIU(s), DTA(s), and associated ports which are covered in section 5.0. This paragraph assumes that all DIUs/DTAs and associated wiring have been installed per section 5.0.

System 4CHT Card Installation

10.2.1 The switching system must be configured with a 4CHT card to support the DIU and the Hotel/Motel printer option. Install the 4CHT card as follows:

Insert the 4CHT Card in slots 00 through 14 of the basic or expansion cabinet.

Hotel/Motel Printer Installation

10.2.2 The Hotel/Motel printer(s) is installed as follows:

1. Unpack and set up the printer per the manufacturer's documentation.

2. Depending on the type of printer, verify the printer cable pin-out as described in Appendix I using a volt-ohmmeter continuity test and/or the manufacturer's documentation. Tag the cable indicating the printer-end and system-end. Maximum allowable cable length is 50 feet.

3. Install the printer cable-end to the RS-232C port on the printer using securing screws.

4. Install the system cable-end to the DIU or DTA connector, securing with screws. Set the DIU switch to the DTE position.

System Configuration of Hotel/Motel Printer Characteristics

10.2.3 After installation of the the printer, 4CHT, and all peripheral wiring, the system must be configured to match the Hotel/Motel printer characteristics.

1. Set the following parameters to match the printer characteristics using CMC 222 and the printer manufacturer's documentation:

   P1 DTA or DIU Directory Number

P2 Data Speed (bit/baud rate 110 through 19,200 bps)
P3 Synchronization and communications
P4 Word structure (stop bits/word length)
P5 Parity
P6 Echo

2. Set the following parameters to match the printer characteristics using CMC 223 and the printer manufacturer's documentation:

P1 Directory Number
P2 Call Control Mode
P3 RS-232C Interface Mode 1
P4 RS-232C Interface Mode 2

Hotel/Motel Printer Option

10.3 This paragraph describes the operational aspects and printer message formats of the Hotel/Motel printer option. Topics covered include message formats, message screening, and loading the printer paper.

Hotel/Motel Printer Output Format

10.3.1 The following describes the Hotel/Motel printer output format. The messages that are output to the Hotel/Motel printer are classified into the following types:

- Common Messages. These are messages that are independent of the FDC (Front Desk Console) operation. The common messages are output to the pre-registered Hotel/Motel printer.
- Independent Messages. These are messages related to the associated FDC operation. The independent messages are output according to FDC operation.

The Hotel/Motel printer output format is shown in Table 10.2.

The messages that are printed out are as follows:

1. Automatic wake-up registration
2. Automatic wake-up cancellation
3. Automatic wake-up execution
4. Automatic wake-up report
5. Message registration addition
6. Message registration clear
7. Message registration verification
8. Message registration report
9. Short power failure
10. Printer failure
11. Real-time clock failure
12. Real-time clock repair
13. Real-time clock change

Table 10.2 Hotel/Motel Printer Output Format (80 Column)

MESSAGE TYPE	OUTPUT
Automatic Wake-up	
Registration	mm/dd hh:mm WAKE-UP REG rrrr hh:mm⊙ hh.mm⊛ BY rrrr
Cancellation	mm/dd hh:mm WAKE-UP CNCL rrrr hh:mm⊙ BY rrrr
Execution	**mm/dd hh:mm WAKE-UP CALL rrrr sssssssss
Report	mm/dd hh:mm WAKE-UP REGISTRATION PRINT OUT BY rrrr hh:mm⊙ rrrr rrrr rrrr rrrr rrrr eeeeee

NOTE:
- mm/dd hh:mm = operated day and time
- rrrr = registered, canceled, or verified room number
- hh:mm⊙ = old wake-up time
- hh:mm⊛ = new or current wake-up time
- BY rrrr = operated station number
- sssssssss = wake-up call status (answer, no answer, busy, or no ring
- eeeee = completion message (end or cancel)
- ** = wake-up no answer

Table 10.2 Hotel/Motel Printer Output Format (80 Column) (Continued)

MESSAGE TYPE	OUTPUT
Message Registration	
Addition	mm/dd hh:mm MESSAGE* ADDED rrrr $ddd.cc⊙ $ddd.cc BY rrrr
Clear	mm/dd hh:mm MESSAGE* CLEARED rrrr $ddd.cc⊙ BY rrrr
Verification	mm/dd hh:mm MESSAGE* VERIFIED rrrr $ddd.cc BY rrrr
Report	mm/dd hh:mm MESSAGE* REGISTRATION PRINT OUT BY rrrr
	rrrr $ddd.cc rrrr $ddd.cc rrrr $ddd.cc rrrr $ddd.cc rrrr $ddd.cc
	eeeeee

NOTE:
- mm/dd hh:mm = operated day and time
- rrrr = registered, cancelled, or verified room number
- $ddd.cc⊙ = old charge
- $ddd.cc = new message or current charge
- BY rrrr = operated station number
- eeeeee = completion message (end or cancel)

MESSAGE TYPE	OUTPUT		
Other			
Short power failure	POWER FAIL		
Printer failure	PRINTER FAILURE		
Real time clock failure	CLOCK FAIL	hh.mm	CHECK WAKE-UP
Real time clock repair	CLOCK REPAIR	hh.mm	CHECK WAKE-UP
Real time clock change	CLOCK CHANGE	hh.mm	CHECK WAKE-UP

Hotel/Motel Printer Screening

10.3.2 The system has a screening capability for the Hotel/Motel printer. This capability is specified by using CMC commands. Table 10.3 shows the screening items, description, and related CMC commands.

Table 10.3 Hotel/Motel Screening Capabilities

ITEM	DESCRIPTION	RELATED COMMAND
Independent Messages	Automatic wake-up status	CMC 357
	Automatic wake-up registration/cancellation/ report by FDC	CMC 357, 358
	Message registration status	CMC 357
	Message registration added/initialized/verify report	CMC 357, 358
Common Messages	Automatic wake-up registration/cancellation by guest room	CMC 357, 358
	Automatic wake-up execution	CMC 357, 358
	RTS failure/repair/change	CMC 357

Loading Printer Paper

10.3.3 The printer manufacturer's documentation and paragraph 9.3.3 should be referenced for loading the printer paper.

APPENDIX I

SECTION 1

CABLE PINOUT DIAGRAMS FOR EQUIPMENT CONNECTED TO THE DIU (DIGITAL INTERFACE UNIT)

DIU Configured as DCE
(Rear Panel Switch in DTE Position)

RS-232C Interchange Circuits			Pin Number
Description	Abbr.	Circuit	
Protective Ground	FG	AA	1
Signal Ground (Common Return)	SG	AB	7
Transmitted Data	TD	BA	2
Received Data	RD	BB	3
Request to Send	RTS	CA	4
Received Line Signal Detector	RLSD	CF	8
Clear to Send	CTS	CB	5
Data Set Ready	DSR	CC	6
Data Terminal Ready	DTR	CD	20
Transmission Signal Element Timing (DCE Source)	ST2	DB	15
Receiver Signal Element Timing (DCE Source)	RT	DD	17
Ring Indicator	RI	CE	22

Terminal With DTE Type Interface

Pin Number	RS-232C	
	Abbr.	Circuit
1	FG	AA
7	SG	AB
2	TD	BA
3	RD	BB
4	RTS	CA
8	RLSD	CF
5	CTS	CB
6	DSR	CC
20	DTR	CD
15	ST2	DB
17	RT	DD
22	RI	CE

Figure AI-1.1 Generic Cable Pinout for a DTE Type Terminal Connected to a DIU

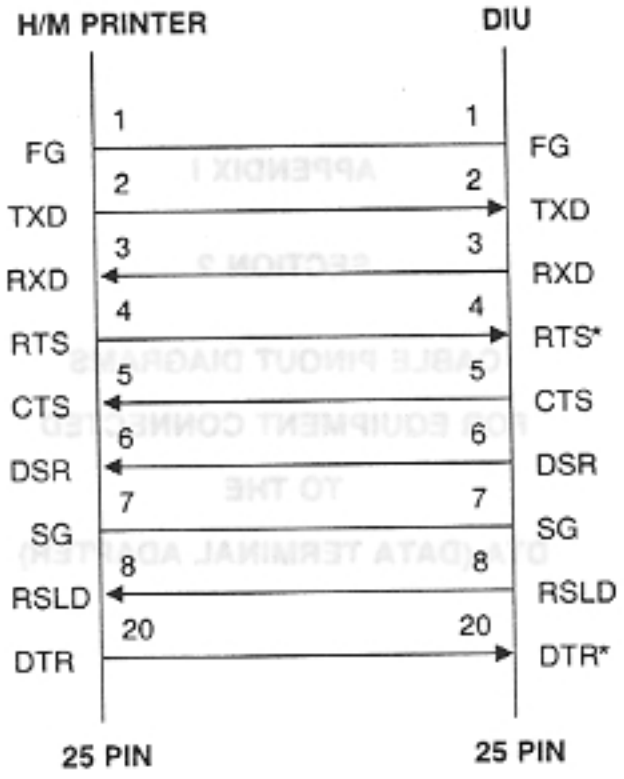

*NOTE: DTR signal and/or RTS signal must be omitted and the DTR option and/or RTS option are set by command (CMC-223).

Figure AI-1.2 Cable Pin-Out for a Hotel/Motel Printer Connected to a DIU

APPENDIX I

SECTION 2

CABLE PINOUT DIAGRAMS FOR EQUIPMENT CONNECTED TO THE DTA (DATA TERMINAL ADAPTER)

DTA Interface

RS-232C Interchange Circuits			Pin Number
Description	Abbr.	Circuit	
Protective Ground	FG	AA	1
Signal Ground (Common Return)	SG	AB	7
Transmitted Data	TD	BA	2
Received Data	RD	BB	3
Request to Send	RTS	CA	4
Received Line Signal Detector	RLSD	CF	8
Clear to Send	CTS	CB	5
Data Set Ready	DSR	CC	6
Data Terminal Ready	DTR	CD	20
Transmission Signal Element Timing (DCE Source)	ST2	DB	15
Receiver Signal Element Timing (DCE Source)	RT	DD	17
Ring Indicator	RI	CE	22

Terminal With DTE Type Interface

Pin Number	RS-232C	
	Abbr.	Circuit
1	FG	AA
7	SG	AB
2	TD	BA
3	RD	BB
4	RTS	CA
8	RLSD	CF
5	CTS	CB
6	DSR	CC
20	DTR	CD
15	ST2	DB
17	RT	DD
22	RI	CE

Figure AI-2.1 Generic Cable Pin-Out for a DTE Type Terminal Connected to a DTA

APPENDIX I

SECTION 3

CABLE PINOUT DIAGRAMS
FOR EQUIPMENT CONNECTED
TO THE
SERIAL COMMUNICATIONS INTERFACE

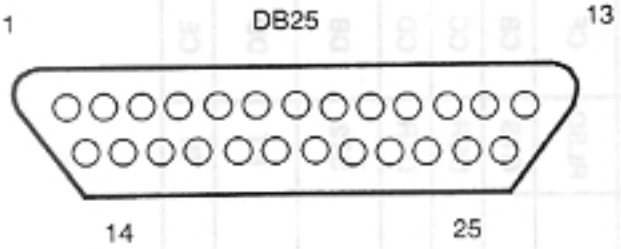

NO.	SIGNAL	COLOR
1	FG	(SHIELD)
2	TXC	WHITE
3	RXD	RED
4-5	---	BLUE
6	DSR	GREEN
7	SG	BLACK
8	CD	BROWN
9-19	NOT USED	---
20	DTR	YELLOW
21-25	NOT USED	---

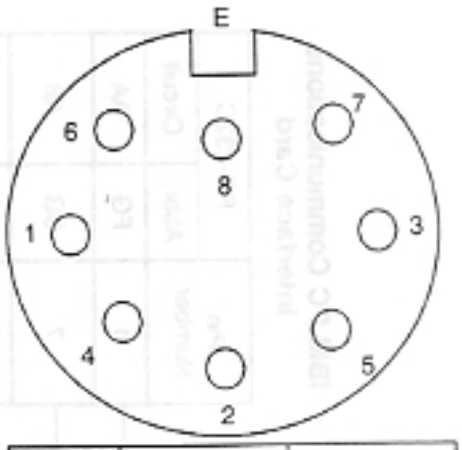

NO.	SIGNAL	COLOR
1	SG	BLACK
2	TXD	RED
3	RXD	WHITE
4	RTS	BROWN
5	CTS	BROWN
6	DSR	YELLOW
7	DTR	GREEN
8	CD	BLUE
E	FG	(SHIELD)

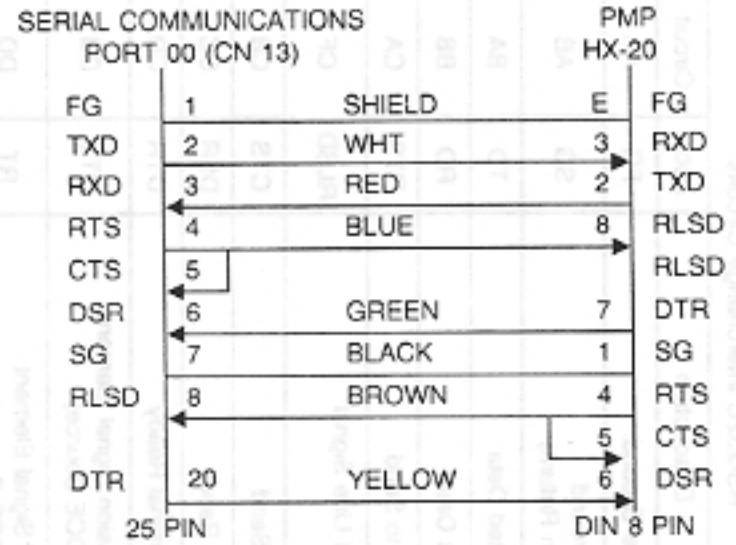

Figure AI-3.1 Specific Cable Pinout for PMP Connected to the Serial Communications Port

FP A-D 7/87 I-177

Serial Communications Interface Port 00 (CN13)

RS-232C Interchange Circuits			Pin Number
Description	Abbr.	Circuit	
Protective Ground	FG	AA	1
Signal Ground (Common Return)	SG	AB	7
Transmitted Data	TD	BA	2
Received Data	RD	BB	3
Request to Send	RTS	CA	4
Received Line Signal Detector	RLSD	CF	8
Clear to Send	CTS	CB	5
Data Set Ready	DSR	CC	6
Data Terminal Ready	DTR	CD	20
Transmission Signal Element Timing (DCE Source)	ST2	DB	15
Receiver Signal Element Timing (DCE Source)	RT	DD	17
Ring Indicator	RI	CE	22

Special Cable

IBM PC Communications Interface Card

Pin Number	RS-232C	
	Abbr.	Circuit
1	FG	AA
7	SG	AB
2	TD	BA
3	RD	BB
4	RTS	CA
8	RLSD	CF
5	CTS	CB
6	DSR	CC
20	DTR	CD
15	ST2	DB
17	RT	DD
22	RI	CE

Figure AI-3.2 Special Cable Pinout for IBM PC-to-Serial Port Interface

IBM PC Interface

RS-232C Interchange Circuits			Pin Number
Description	Abbr.	Circuit	
Protective Ground	FG	AA	1
Signal Ground (Common Return)	SG	AB	7
Transmitted Data	TD	BA	2
Received Data	RD	BB	3
Request to Send	RTS	CA	4
Received Line Signal Detector	RLSD	CF	8
Clear to Send	CTS	CB	5
Data Set Ready	DSR	CC	6
Data Terminal Ready	DTR	CD	20
Transmission Signal Element Timing (DCE Source)	ST2	DB	15
Receiver Signal Element Timing (DCE Source)	RT	DD	17
Ring Indicator	RI	CE	22

Modem with DCE

Pin Number	RS-232C	
	Abbr.	Circuit
1	FG	AA
7	SG	AB
2	TD	BA
3	RD	BB
4	RTS	CA
8	RLSD	CF
5	CTS	CB
6	DSR	CC
20	DTR	CD
15	ST2	DB
17	RT	DD
22	RI	CE

Figure AI-3.3 Cable Pinout for DCE Type Modem Connected to the IBM PC for Use as a Remote Maintenance Device

Serial Communications Interface Port 01 (CN14)

RS-232C Interchange Circuits			Pin Number
Description	Abbr.	Circuit	
Protective Ground	FG	AA	1
Signal Ground (Common Return)	SG	AB	7
Transmitted Data	TD	BA	2
Received Data	RD	BB	3
Request to Send	RTS	CA	4
Received Line Signal Detector	RLSD	CF	8
Clear to Send	CTS	CB	5
Data Set Ready	DSR	CC	6
Data Terminal Ready	DTR	CD	20
Transmission Signal Element Timing (DCE Source)	ST2	DB	15
Receiver Signal Element Timing (DCE Source)	RT	DD	17
Ring Indicator	RI	CE	22

SMDR Printer with DTE Type Interface

Pin Number	RS-232C	
	Abbr.	Circuit
1	FG	AA
7	SG	AB
2	TD	BA
3	RD	BB
4	RTS	CA
8	RLSD	CF
5	CTS	CB
6	DSR	CC
20	DTR	CD
15	ST2	DB
17	RT	DD
22	RI	CE

Figure AI-3.4 Cable Pinout for DTE Type SMDR Printer with RTS Connected to the Serial Communications Port

Serial Communications Interface Port 01 (CN14)

RS-232C Interchange Circuits			Pin Number
Description	Abbr.	Circuit	
Protective Ground	FG	AA	1
Signal Ground (Common Return)	SG	AB	7
Transmitted Data	TD	BA	2
Received Data	RD	BB	3
Request to Send	RTS	CA	4
Received Line Signal Detector	RLSD	CF	8
Clear to Send	CTS	CB	5
Data Set Ready	DSR	CC	6
Data Terminal Ready	DTR	CD	20
Transmission Signal Element Timing (DCE Source)	ST2	DB	15
Receiver Signal Element Timing (DCE Source)	RT	DD	17
Ring Indicator	RI	CE	22

SMDR Printer with DTE Type Interface

Pin Number	RS-232C	
	Abbr.	Circuit
1	FG	AA
7	SG	AB
2	TD	BA
3	RD	BB
4	RTS	CA
8	RLSD	CF
5	CTS	CB
6	DSR	CC
20	DTR	CD
15	ST2	DB
17	RT	DD
22	RI	CE

Figure AI-3.5 Cable Pinout for DTE Type SMDR Printer Connected to the Serial Communications Port

Serial Communications Interface
Port 01 (CN14)

RS-232C Interchange Circuits			Pin Number
Description	Abbr.	Circuit	
Protective Ground	FG	AA	1
Signal Ground (Common Return)	SG	AB	7
Transmitted Data	TD	BA	2
Received Data	RD	BB	3
Request to Send	RTS	CA	4
Received Line Signal Detector	RLSD	CF	8
Clear to Send	CTS	CB	5
Data Set Ready	DSR	CC	6
Data Terminal Ready	DTR	CD	20
Transmission Signal Element Timing (DCE Source)	ST2	DB	15
Receiver Signal Element Timing (DCE Source)	RT	DD	17
Ring Indicator	RI	CE	22

SMDR Printer
Telematic

Pin Number	RS-232C	
	Abbr.	Circuit
1	FG	AA
7	SG	AB
2	TD	BA
3	RD	BB
4	RTS	CA
8	RLSD	CF
5	CTS	CB
6	DSR	CC
20	DTR	CD
15	ST2	DB
17	RT	DD
22	RI	CE

Figure AI-3.6 Specific Cable Pinout for Telematic Printer Used as an SMDR Printer

Serial Communications Interface
Port 01 (CN14)

SMDR Printer
3M

RS-232C Interchange Circuits			Pin Number
Description	Abbr.	Circuit	
Protective Ground	FG	AA	1
Signal Ground (Common Return)	SG	AB	7
Transmitted Data	TD	BA	2
Received Data	RD	BB	3
Request to Send	RTS	CA	4
Received Line Signal Detector	RLSD	CF	8
Clear to Send	CTS	CB	5
Data Set Ready	DSR	CC	6
Data Terminal Ready	DTR	CD	20
Transmission Signal Element Timing (DCE Source)	ST2	DB	15
Receiver Signal Element Timing (DCE Source)	RT	DD	17
Ring Indicator	RI	CE	22

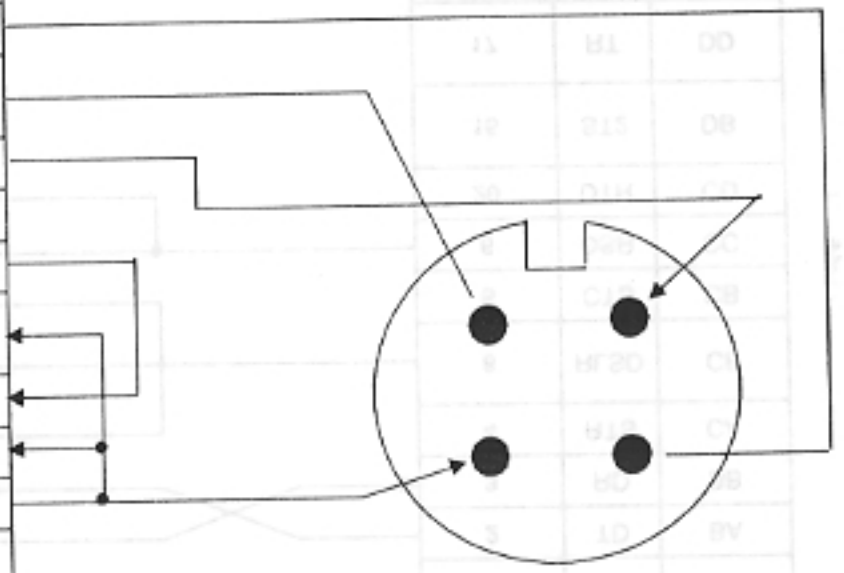

Figure AI-3.7 Specific Cable Pinout for 3M Printer Used as an SMDR Printer

Serial Communications Interface Port 01 (CN14)

RS-232C Interchange Circuits			Pin Number
Description	Abbr.	Circuit	
Protective Ground	FG	AA	1
Signal Ground (Common Return)	SG	AB	7
Transmitted Data	TD	BA	2
Received Data	RD	BB	3
Request to Send	RTS	CA	4
Received Line Signal Detector	RLSD	CF	8
Clear to Send	CTS	CB	5
Data Set Ready	DSR	CC	6
Data Terminal Ready	DTR	CD	20
Transmission Signal Element Timing (DCE Source)	ST2	DB	15
Receiver Signal Element Timing (DCE Source)	RT	DD	17
Ring Indicator	RI	CE	22

SMDR Printer OKI Data

Pin Number	RS-232C	
	Abbr.	Circuit
1	FG	AA
7	SG	AB
2	TD	BA
3	RD	BB
4	RTS	CA
8	RLSD	CF
5	CTS	CB
6	DSR	CC
20	DTR	CD
15	ST2	DB
17	RT	DD
22	RI	CE

Figure AI-3.8 Specific Cable Pinout for Oki Data Printer Used as an SMDR Printer

Serial Communications Interface
Port 01 (CN14)

RS-232C Interchange Circuits			Pin Number
Description	Abbr.	Circuit	
Protective Ground	FG	AA	1
Signal Ground (Common Return)	SG	AB	7
Transmitted Data	TD	BA	2
Received Data	RD	BB	3
Request to Send	RTS	CA	4
Received Line Signal Detector	RLSD	CF	8
Clear to Send	CTS	CB	5
Data Set Ready	DSR	CC	6
Data Terminal Ready	DTR	CD	20
Transmission Signal Element Timing (DCE Source)	ST2	DB	15
Receiver Signal Element Timing (DCE Source)	RT	DD	17
Ring Indicator	RI	CE	22

SMDR Printer
Silent 700

Pin Number	RS-232C	
	Abbr.	Circuit
1	FG	AA
7	SG	AB
12	D	B
13	D	B
4	RTS	CA
8	RLSD	CF
5	CTS	CB
6	DSR	CC
20	DTR	CD
15	ST2	DB
9		
22	RI	CE

Figure AI-3.9 Specific Cable Pinout for Silent 700 Printer Used as an SMDR Printer

THIS PAGE IS INTENTIONALLY LEFT BLANK.

APPENDIX II

SYSTEM HARDWARE LIST

AND

PART NUMBERS

SYSTEM HARDWARE LIST AND PART NUMBERS

ORDER CODE	CATALOG NO.
CABINET	SB-10010010
INTERCABINET CONNECTING KIT	SB-10010013
POWER SUPPLY	SB-4195784136
CPM-A through CPM-D	SB-9103260000
SWC	SB-4195804136
SWB	SB-10010011
SWE	SB-10010012
MEM-A through MEM-D	SB-9103261000
RGEN	SB-4195814136
8EKC	SB-4195834136
8SLC	SB-4195844136
8DTC	SB-9103262000
4BWC	SB-4195854136
2TTE	SB-4195864136
2TTL	SB-4195884136
4DMR	SB-4195904136
4CHT	SB-9104061000
6PFT	SB-4195924136
6PFE	SB-10010014
HEADSET ADAPTER with AC Adapter	SB-9104065000
ATTENDANT CONSOLE	SB-9104052000
CS-10 (Private Label) (ATELIA)	SB-4195934136
CS-20 (Private Label) (ATELIB)	SB-4195944136
DSS40 (Private Label) (ADSS40)	SB-4195954136
DSS80 (Private Label) (ADSS80)	SB-4195964136
DSS40 FOR ATTENDANT CONSOLE	SB-9104063000
DSS80 FOR ATTENDANT CONSOLE	SB-9104064000
CSD (Private Label) (ATELII)	SB-9103523000

SYSTEM HARDWARE LIST AND PART NUMBERS (Continued)

ORDER CODE	CATALOG NO.
CS-10 (GTE Label) (GTELIA)	SB-8102244136
CS-20 (GTE Label) (GTELIB)	SB-8100634136
DSS40 (GTE Label)	SB-8100664136
DSS80 (GTE Label)	SB-8100674136
CSD (GTE Label) (GTELII)	SB-9103264000
Telephone Wall Mounting Kit (TELLWMK)	SB-8102174136
Data Interface Unit	SB-910406000
Data Terminal Adapter (with AC adapter)	SB-9103263000
Power Cable (PCBL)	SB-8102134136
Cabinet, Front Cover (CABFC)	SB-8102144136
Cabinet, Front Cover (CABFC) (Expansion)	SB-10010022
Cabinet Mounting Bracket (CABMB)	SB-8102154136
Battery (BATT)	SB-8102164136
Directory Tray (100 pc.) (DTRAY)	SB-8102184136
Tray Sheet (100 pc.) (TRAYSH)	SB-8102194136
Telephone Sheet (10 pc.) (TELSH)	SB-8102204136
DSS Sheet (100 pc.) (DSSH)	SB-8102214136
Plastic Sheet Cover (EKT) (100 pc.) (PLCVR-EKT)	SB-8102224136
Plastic Sheet Cover (DSS) (100 pc.) (PLCVR-DSS)	SB-8102234136
Preprinted Button Labels (25)	SB-9101596000
Blank Button Labels	SB-9101613000
Portable Maintenance Panel (PMP)	SB-9102143000
PMP Software VO.6	SB-9101262000
Floppy Disk Drive	SB-9103418000
PMP Cable (4-foot)	SB-9102144000
PMP Cable (10-foot)	SB-9103224000
RAM Expansion Unit for PMP	SB-9103419000
PMP Disk Drive Cable	SB-9103420000

THIS PAGE IS INTENTIONALLY LEFT BLANK.

APPENDIX III

INSTALLATION NOTES FOR OPTIONAL VOICE APPLICATION FEATURES

APPENDIX III

INSTALLATION NOTES FOR OPTIONAL VOICE FEATURES

SECTION I PAGING UNITS

The system allows both PABX trunk level interface units and PABX station level interface units. When using Package B, C, or D software, the system allows the connection of some paging amplifiers directly to the 4BWC (Bothway Card) ports. It is useful to note, however, that the paging access feature of the system was originally designed as a trunk interface. This makes the PABX trunk level interface units more useful than the PABX station level interface units. Reasons for this are:

- When using trunk level interface units, paging answer service is available with Packages B, C, and D.
- When using the station level interface, ROT (Reorder Tone) timing has to be changed to avoid broadcasting of ROT. This change produces an effect on both the BT (Busy Tone) and ROT timing on all speech paths in Packages A, B, and C. In Package D, ROT can be stopped port by port.

NOTE: Paging units designed for 1A2, 10A2, or 17A Key Systems cannot be used with the system.

AIII 1.1 Valcom Installation Notes

- Valcom V-1101 (one-way page for one zone)
- Valcom V-1109RTVA (one-way page with all zones up to 9 zones)
- Valcom V-9921 (hands-free talkback with all zones up to 9 zones)
- Valcom V-1109 RTHF (hands-free talkback with all zones up to 9 zones)

Connection

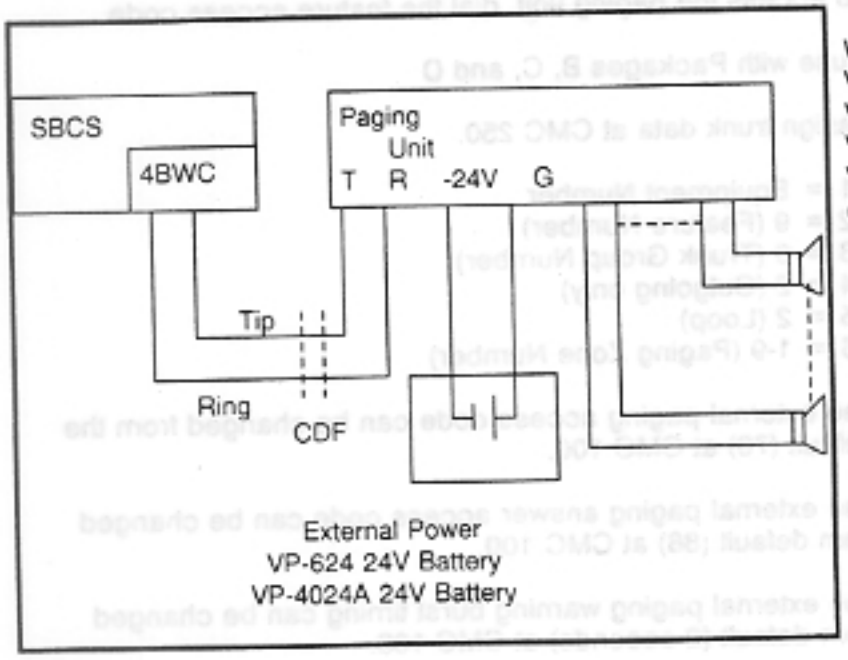

Without talkback
V-1020C Ceiling Speaker
V-1022C Wall Speaker
V-1030B (5w) Horn Speaker
V-1036B (15w) Horn Speaker
(Required - 24V Power Connection)

With talkback
V-1060A without LED Ceiling Speaker
V-1060B with LED Ceiling Speaker
V-1062B without LED Wall Speaker
V-1062B with LED Wall Speaker
V-1048A without LED Horn Speaker
V-1048B with LED Horn Speaker

Programming Steps

A. For use with Package A

1. Select an unused trunk group number (TGN)13 to 30 for paging access.

2. Select paging access code. Should you choose to change the access code from the default, you can do so at CMC 100.

3. Assign trunk data at CMC 250.

   P1 = Equipment Number
   P2 = Feature Number
   P3 = Trunk Group Number (TGN)
   P4 = 2 (outgoing only)
   P5 = 2 (loop)
   P6 = 1 (wink start)

4. Release all restrictions at CMC 400.

   P1 = Trunk Group Number
   P2 = Blank
   P3 = Blank

NOTE: To enter blank at CMC 400, put trunk group number in P1 and press display. Move cursor to P2 and press cancel, move cursor to P3 and press cancel. Now press add/change. Do not assign this TGN for LCR or SMDR output.

5. To access the paging unit, dial the feature access code.

B. For use with Packages B, C, and D

1. Assign trunk data at CMC 250.

   P1 = Equipment Number
   P2 = 9 (Feature Number)
   P3 = 3 (Trunk Group Number)
   P4 = 2 (Outgoing only)
   P5 = 2 (Loop)
   P6 = 1-9 (Paging Zone Number)

2. The external paging access code can be changed from the default (78) at CMC 100.

3. The external paging answer access code can be changed from default (88) at CMC 100.

4. The external paging warning burst timing can be changed from default (2 seconds) at CMC 103.

AIII 1.2 Harris Installation Notes

- Talkback (required Talkback Control card)
- Background Music (required FM Tuner Card for external music source)
- 3-zone selections with all zone (required Universal Interface Card)
- Single-Line Card Interface (required Universal Interface Card)

Connections

1. 4BWC Interface (Table AIII.1). No selection of zone. Talkback not required.

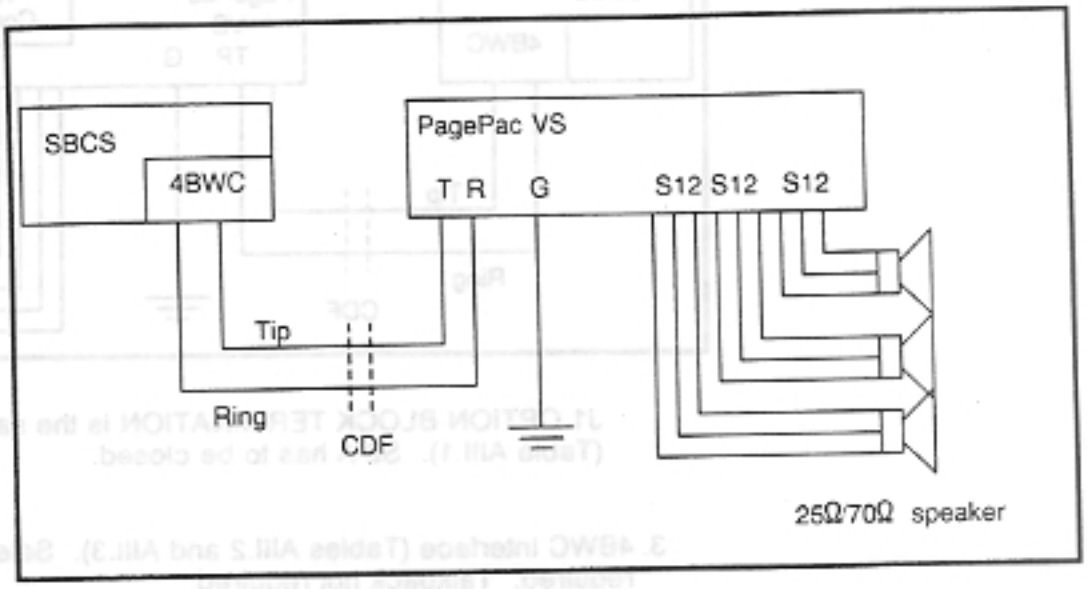

Table AIII.1 J1 OPTION BLOCK TERMINALS
PagePac VS

TALK BATTERY	JUMPERS IN	JUMPERS OUT
-24V	3-3 4-4 6-6 8-8 10-10 11-11	1-1 2-2 5-5 7-7 9-9
-48V	2-2 4-4 6-6 8-8 10-10 11-11	1-1 3-3 5-5 7-7 9-9

2. 4BWC Interface. No selection of zone. Talkback required.

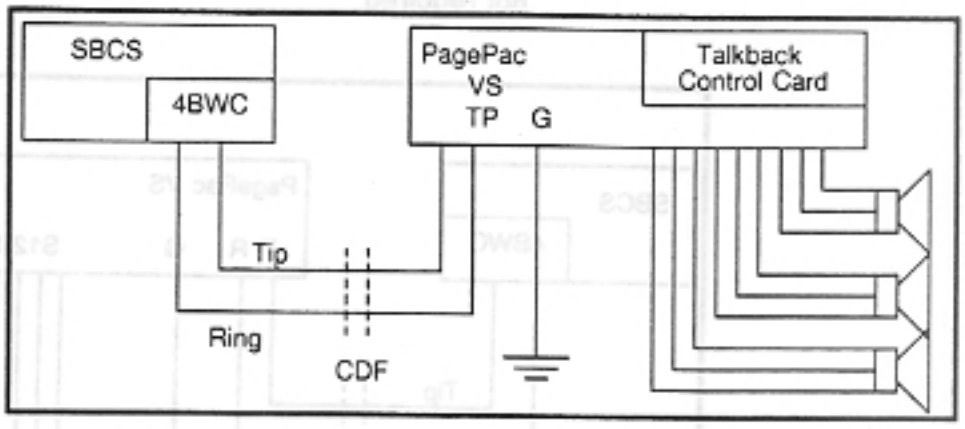

J1 OPTION BLOCK TERMINATION is the same as Item 1 (Table AIII.1). S2-A has to be closed.

3. 4BWC Interface (Tables AIII.2 and AIII.3). Selection of zones required. Talkback not required.

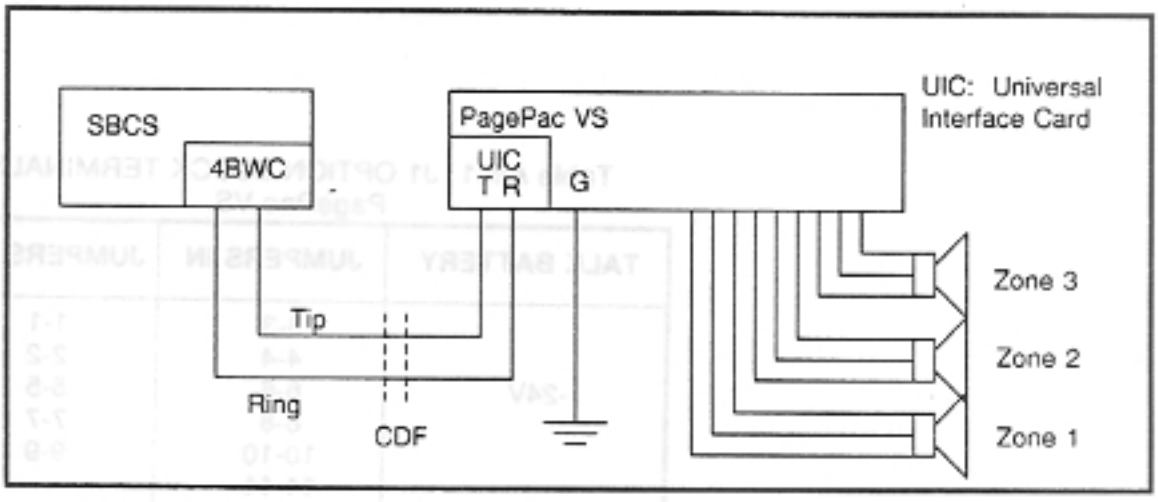

Table AIII.2 J1 OPTION BLOCK TERMINALS on PagePac VS

TALK BATTERY	JUMPERS IN	JUMPERS OUT
-24V	3-3 4-4 6-6 8-8 10-10	1-1 2-2 5-5 7-7 9-9 11-11
-48V	2-2 4-4 6-6 8-8 10-10	1-1 3-3 5-5 7-7 9-9 11-11

Table AIII.3 J3 OPTION BLOCK TERMINALS on UIC

1-1	JUMPER IN
2-2	JUMPER OUT
3-3	JUMPER IN

4. 4BWC Interface. Selection of zones required. Talkback required.

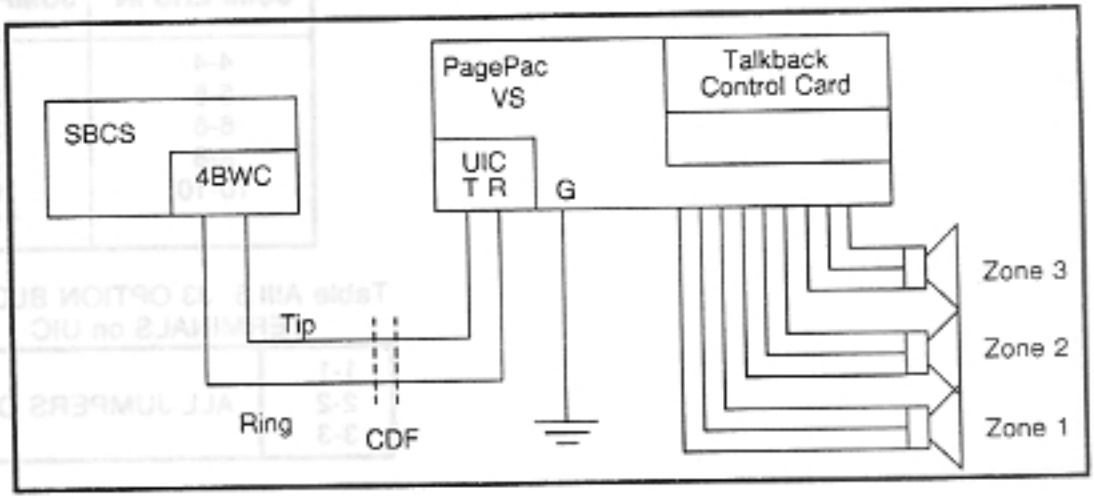

J1 OPTION BLOCK TERMINATION is the same as Item 3 (Table AIII.2).
S2 has to be closed according to your selection.
J3 OPTION BLOCK TERMINATION on UIC is the same as Item 3 (Table AIII.3).

5. SLC Interface (Tables AIII.4, AIII.5, and AIII.6). Talkback not required.

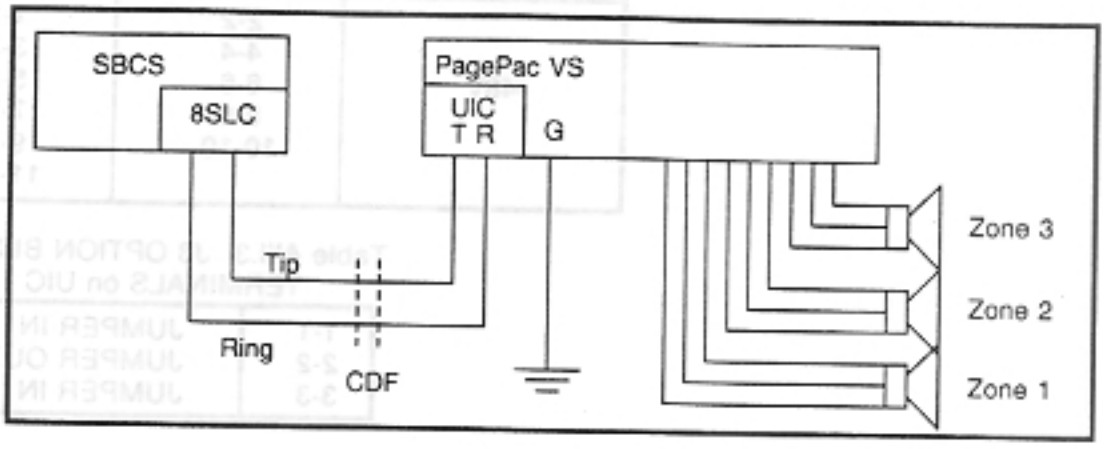

Table AIII.4 J1 OPTION BLOCK TERMINALS

JUMPERS IN	JUMPERS OUT
4-4 5-5 6-6 8-8 10-10	1-1 2-2 3-3 7-7 9-9 11-11

Table AIII.5 J3 OPTION BLOCK TERMINALS on UIC

1-1 2-2 3-3	ALL JUMPERS OUT

Table AIII.6 J103 OPTION PINS Jumper Control Release Time

Jumper Set	4 sec. disconnect
Jumper Omit	8 sec. disconnect

Programming Steps

A. 4BWC Interface with Package A

Follow programming steps in AIII-1.1, Part A.

B. 4BWC Interface with Packages B, C, and D

Follow programming steps in AIII-1.1, Part B.

C. 8SLC Interface with Packages A, B, and C

1. Station directory number can be changed at CMC 200.
2. Change BT and ROT timing (duration of reorder tone at CMC 103 -- this changes BT ROT timing of all call connection).

   P1 = ID for timing (33)
   P2 = Multiplier (5 or 9)

D. SLC Interface with Package D

1. Station directory number can be changed at CMC 200.
2. Change parameter P6 at CMC 204 from 0 to 1 to stop the ROT.

   P1 = Directory number
   P2 = 0
   P3 = 0
   P4 = 0
   P5 = 0
   P6 = 1

AIII 1.3 Melco Installation Notes

PA-200A Paging Access Unit

Connection

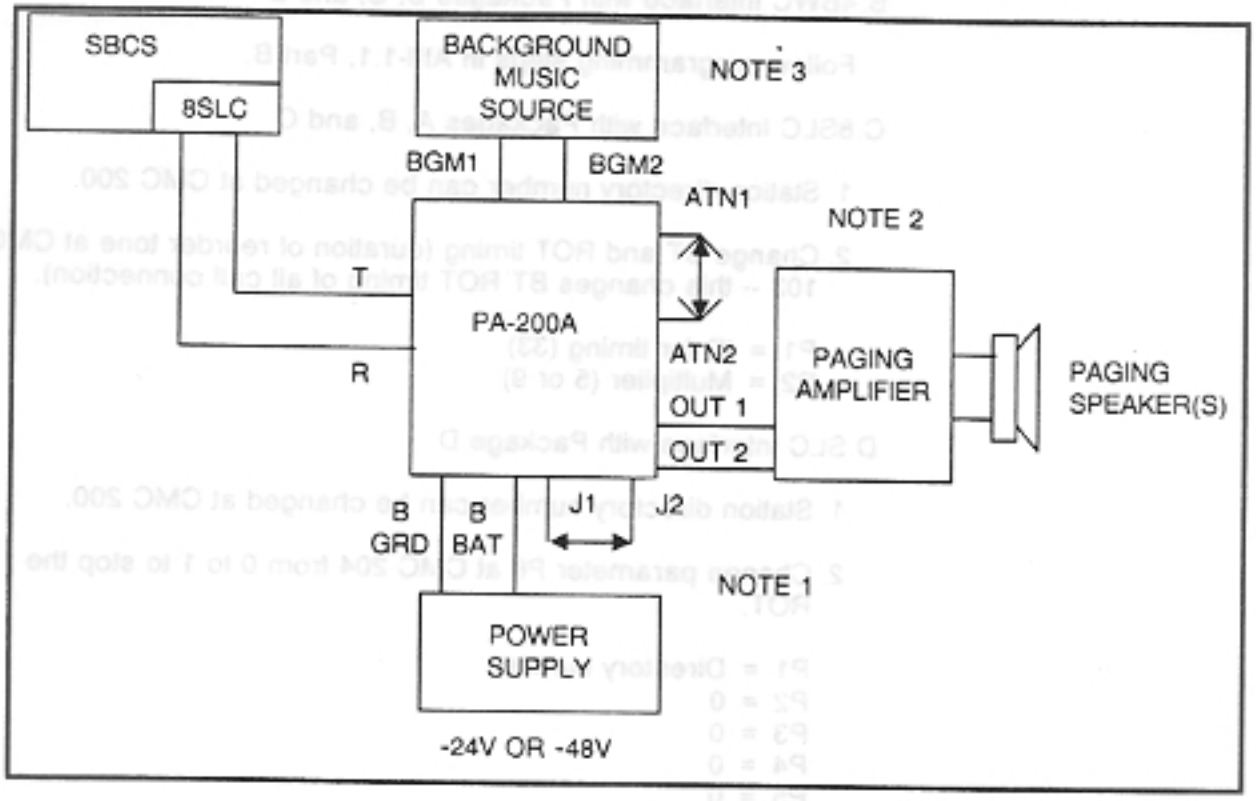

NOTES:

1. Connect -48 or -24 VDC to bat terminal of PA-200A. If - 24V DC is selected, strap J1 and J2
2. For attention tone, strap ATN1 and ATN2.
3. If you do not need background music, do not connect background music source.

Programming Steps

A. 4BWC Interface with Package A

Follow programming steps in AIII-1.1, Part A.

B. 4BWC Interface with Packages B, C, and D

Follow programming steps in AIII-1.1, Part B.

C.8SLC Interface with Packages A, B, and C

1. Station directory number can be changed at CMC 200.

2. Change BT and ROT timing (duration of reorder tone at CMC 103 -- this changes BT ROT timing of all call connection).

   P1 = ID for timing (33)
   P2 = Multiplier (5 or 9)

D.SLC Interface with Package D

1. Station directory number can be changed at CMC 200.

2. Change parameter P6 at CMC 204 from 0 to 1 to stop the ROT.

   P1 = Directory number
   P2 = 0
   P3 = 0
   P4 = 0
   P5 = 0
   P6 = 1

AIII 1.4 Melco Installation Notes

KA-390 Direct Paging Access

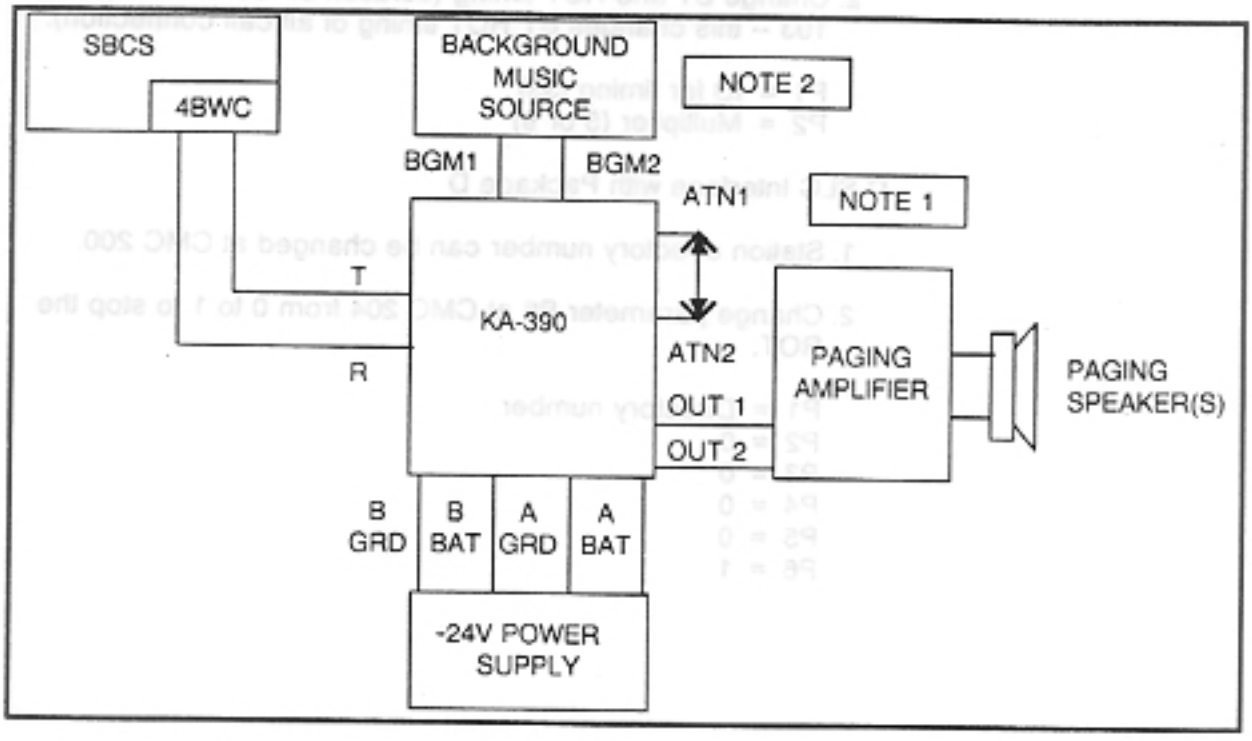

NOTES:

1. For attention tone, strap ATN1 and ATN2.
2. If you do not need background music, do not connect background music source.

Programming Steps

A. For use with Package A

Follow programming steps in AIII 1.1, Part A.

B. For use with Package B, C and D

Follow programming steps in AIII 1.1, Part B.

SECTION II MUSIC-ON-HOLD

AIII 2.1 Harris Installation Notes (-24V Power Supply is required)

FM Music Source -- Model Number: 22550-001

Connection

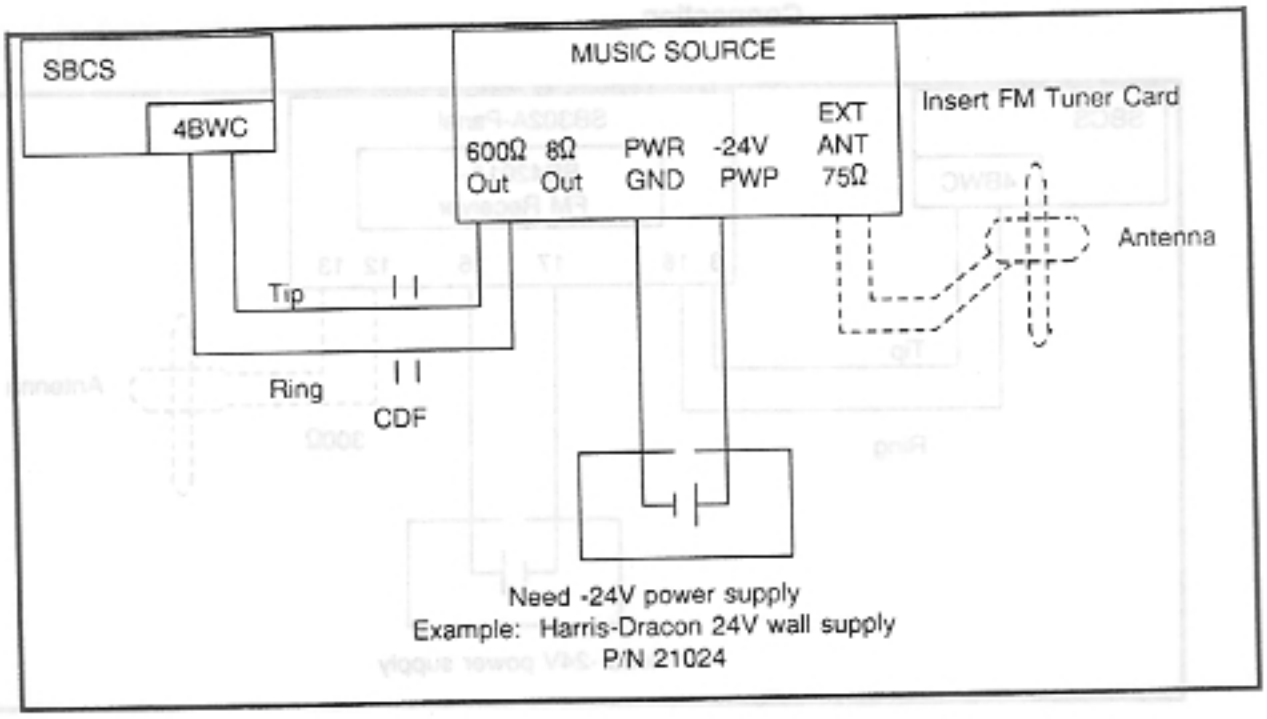

Programming Steps

1. Assign trunk data at CMC 250.

   P1 = Equipment Number
   P2 = Feature Number (11)

2. Assign Music-On-Hold at CMC 305.

   P1 = Equipment Number

AIII 2.2 SAN/BAR Installation Notes (-24V Power Supply is required)

FM Receiver for Music-On-Hold - Model Number: SB4201A-FM

Mounting Panel - Model Number: SB302A-Panel

Connection

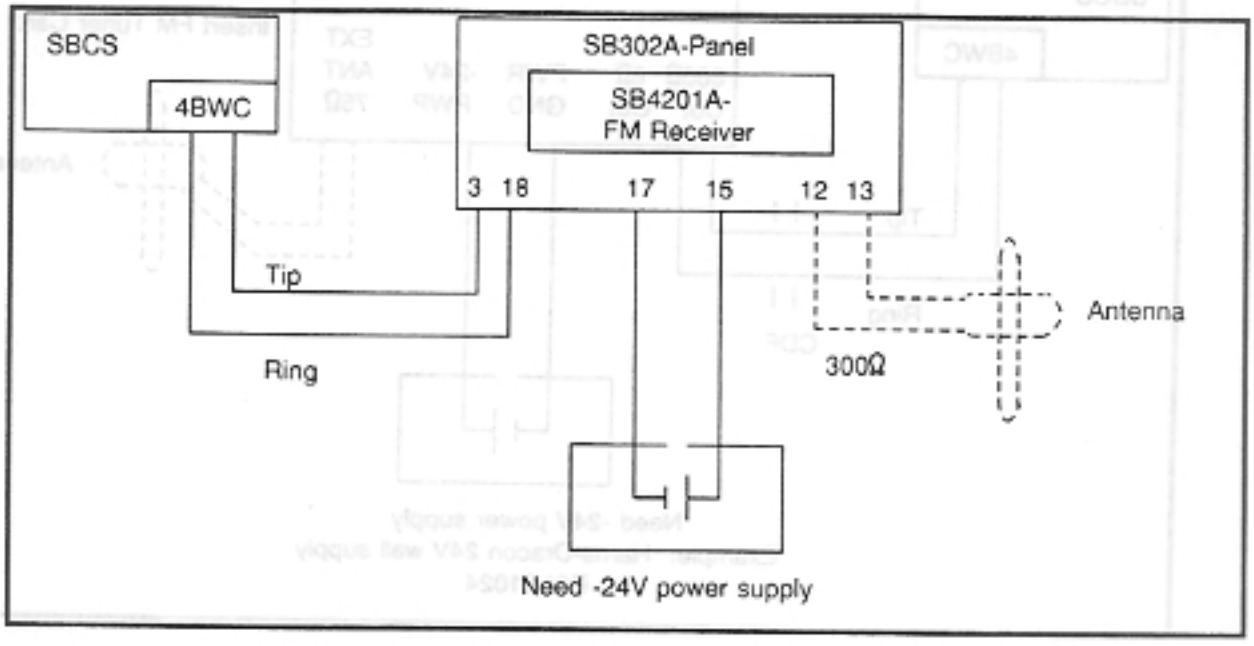

Example:

- SB408A - Power Supply made by SAN/BAR Corporation P/N 0480-200
- Harris-Dracon 24V Wall Supply made by Harris P/N 21024

Programming Steps

1. Assign trunk data at CMC 250.

   P1 = Equipment Number
   P2 = Feature Number (11)

2. Assign Music-On-Hold at CMC 305.

   P1 = Equipment Number

SECTION III OPX (Off-Premises Extension) ADAPTERS

The system single-line card cannot connect with the public telephone network, because the card is not registered with the FCC. Therefore, an FCC registered OPX adapter is needed to connect with the public telephone network.

AIII 3.1 R-Tec Installation Notes

1. Configuration 1

A. Components

1. UM2500 List O Loop Extender (FCC-Part 68 not registered)
2. VFR1050 List 2 Voice Frequency Repeater (FCC-Part 6B registered)
3. WM222 UM Mounting (wall mount type with 2 card slots)
4. PS19 Power Supply (fixed 48 VDC output)

B. Connection

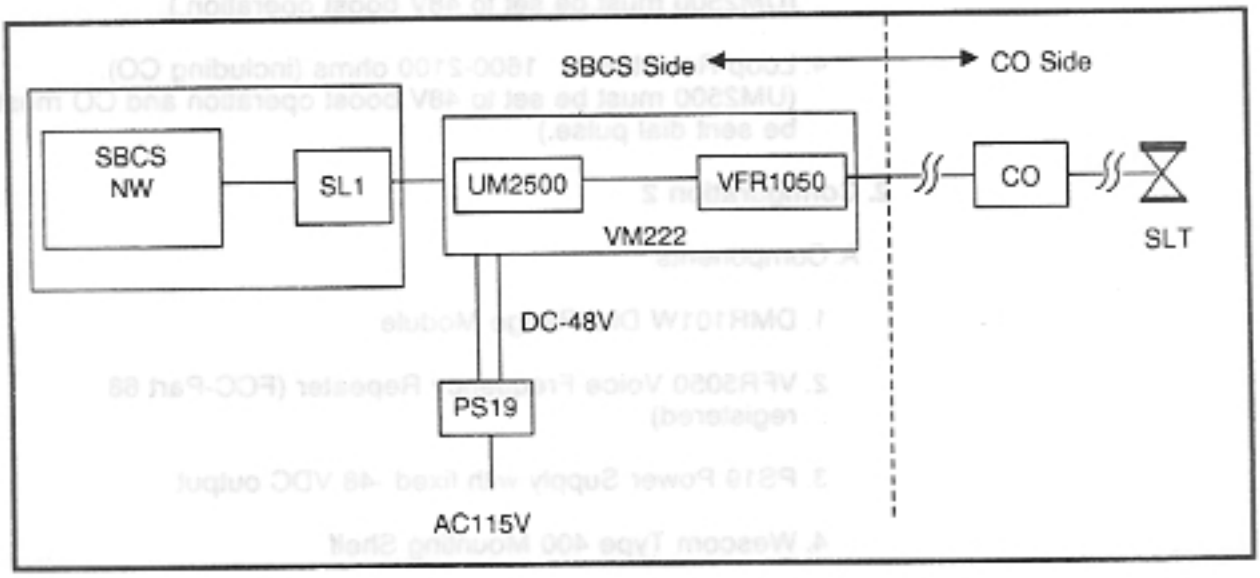

C. Loop Limit

1. Loop Resistance: Up to 600 ohms (including CO) (UM2500 is not needed)

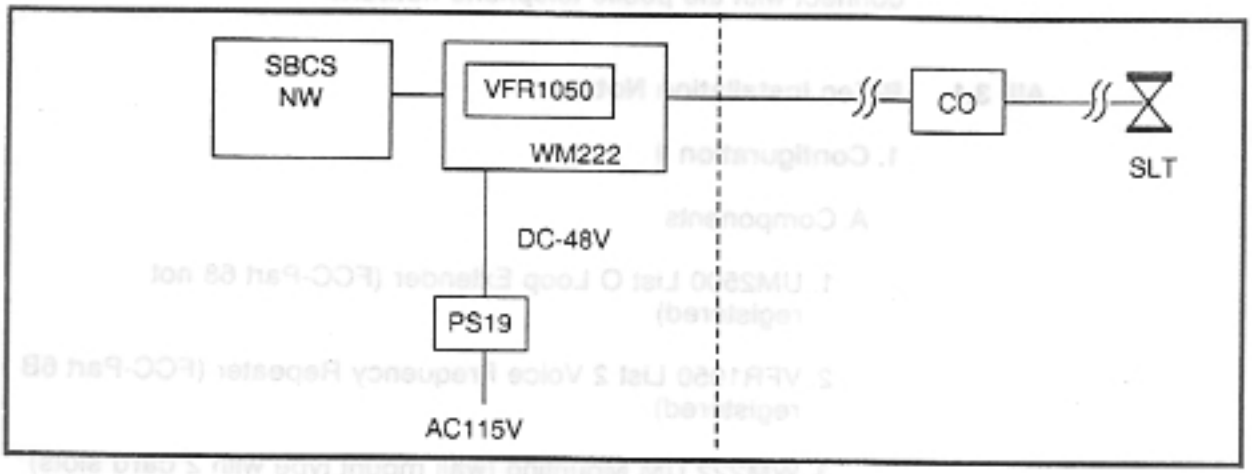

2. Loop Resistance: 600-1200 ohms (including CO). (UM 2500 must be set to 36V boost operation.)

3. Loop Resistance: 1200-1600 ohms (including CO). (UM2500 must be set to 48V boost operation.)

4. Loop Resistance: 1600-2100 ohms (including CO). (UM2500 must be set to 48V boost operation and CO must be sent dial pulse.)

2. Configuration 2

A. Components

1. DMR101W Dial Range Module

2. VFR5050 Voice Frequency Repeater (FCC-Part 68 registered)

3. PS19 Power Supply with fixed -48 VDC output

4. Wescom Type 400 Mounting Shelf

B. Connection

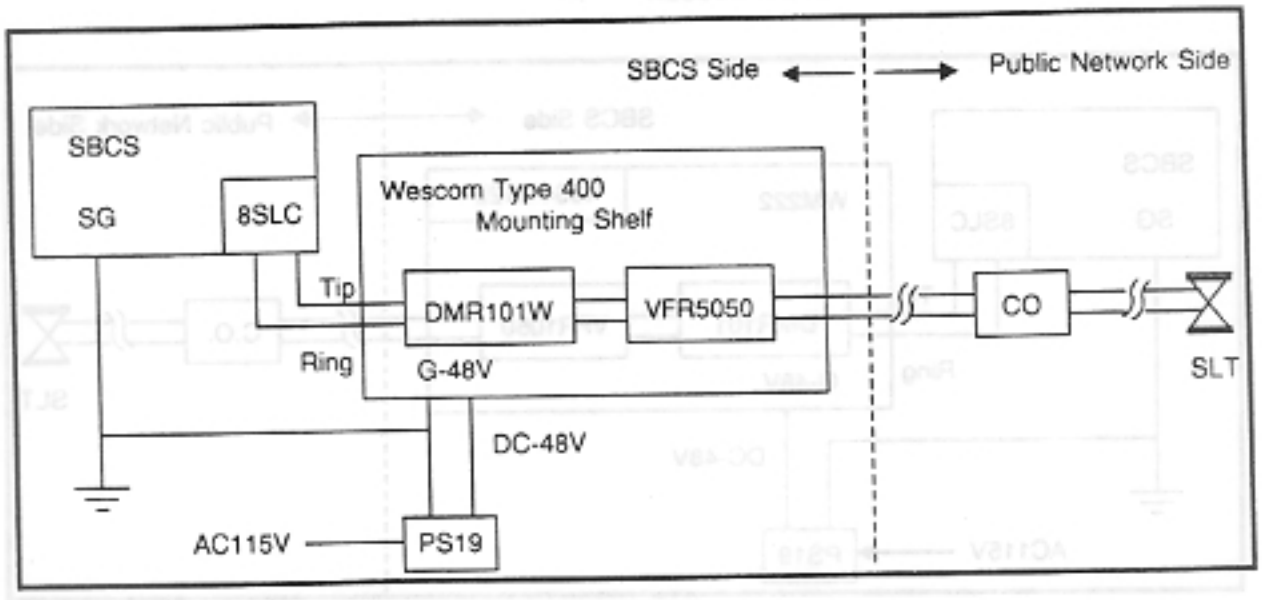

C. Loop Limit

1. Loop Resistance: Up to 600 ohms (including CO). (DMR101W is not required.)

2. Loop Resistance: Up to 1350 ohms (including CO). (DMR101W must be set to 48V boost operation.)

NOTE: FCC does not allow 72V or 96V boost operation.

3. Configuration 3

A. Components

1. DMR101 Dial Range Module

2. VFR1050 List 2 Voice Frequency Repeater (FCC-Part 68 registered)

3. WM222 UM Mounting (wall mount with 2 card slots)

4. 4864-312L Inverter Assembly Card

5. PS19 Power Supply (fixed 48 VDC output)

NOTE: FCC does not allow 72V or 96V boost operation.

B. Connection

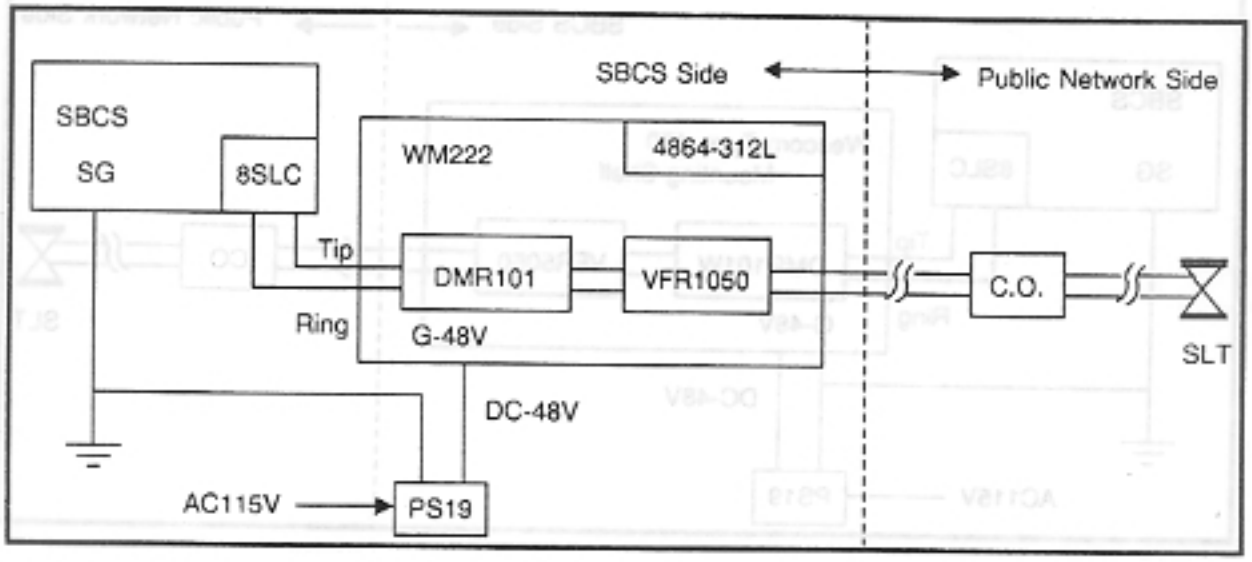

C. Loop Limit

1. Loop Resistance: Up to 600 ohms (including CO). (DMR 101 and 4864-312L is not required.)

2. Loop Resistance: Up to 1350 ohms (including CO). (DMR 101 must be set to 48V boost operation.)

INDEX

A

Associated EKT Installation, **I-101**
Attendant Console Used as an MCT, **I-141**

B

Basic System Card Configuration, **I-52**
Basic System Equipment List, **I-19**
Battery Backup of the Basic System, **I-35**
Battery Backup of the Expanded System, **I-37**
4BWC (Central Office Bothway Trunk Card Installation), **I-84**

C

CDF Cable Assignment Overview, **I-58**
CDF Cross-Connect Assignment Overview, **I-60**
Central Processing Unit and Memory (CPM) Card Installation, **I-41**
Checking PMP Port Configuration for Serial Communications Port or Modem Use, **I-135**
4CHT Installation, **I-103**
Common Control Group (CCG) Installation for Basic System, **I-39**
Common Control Group (CCG) Installation for Expanded System, **I-44**
CSD/DTA Installation, **I-95**
CSD:MCT Operation, **I-140**
CSD with Modem Installation, **I-95**
CSD Telephone Equipped with DTA (Data Terminal Adapter) Overview and Installation, **I-95**
CSD with Terminal or Printer Installation, **I-99**

D

Data Application Peripheral Installation, **I-95**
Data Interface Unit (DIU) Overview and Installation, **I-99**
Description of Application-Specific Cards, **I-47**
Description of System Card/Slot Configuration and Card Placement, **I-52**

Description of System Cards, Card Placement, and Cross-Connect Wiring, **I-47**
DIU/DTA/Port Characteristics, **I-163**
DIU Installation, **I-101**
Drill Mounting Bolt Holes, **I-26, I-37**
8DTC (Proprietary Digital Telephone) Card Applications, **I-83**

E

E&M Tie Trunk (2TTE) Card, **I-90**
8EKC (Electronic Key Telephone) Card Applications, **I-79**
Environmental Conditions, **I-24**
Expanded System Equipment List, **I-36**
Expanded System Card Configuration, **I-54**
External Paging Option, **I-93**

G

Grounding the Basic System, **I-31**
Grounding the Expanded System, **I-37**

H

Handling Cards, **I-39**
Handling, Inserting, Seating/Unseating, and Removing Cards, **I-39**
Handling and Unpacking System Components, **I-21**
Hierarchy of System Cards/Cables, **I-50**
Hotel/Motel Printer Installation, **I-166**
Hotel/Motel Printer Option, **I-167**
Hotel/Motel Printer Option Installation, **I-166**
Hotel/Motel Printer Output Format, **I-167**
Hotel/Motel Printer Screening, **I-170**

I

Initializing the PMP Using Cassette Tape, **I-127**
Initialization System Software, **I-148**
Inserting/Seating Cards, **I-39**

Installation of Cabinet(s), Power Supply(s), Cabling, and Common Control Cards, **I-25**
Installation of Cabinets and Power for the Basic System, **I-25**
Installation of Cabinets and Power for the Expanded System, **I-36**
Installation Verification Checklist, **I-147**
Installing the Basic System Power Cable, **I-34**
Intent and Scope, **I-13**
Introduction and Pre-Installation Information, **I-13**

L

Line (Station) Voice Application Installation, **I-73**
Loading the ODDB Using the PC, **I-140**
Loading Printer Paper, **I-170**
Loading SMDR Printer Paper, **I-160**
Loop Dial Tie Trunk (2TTL) Card, **I-92**

M

Master Control Telephone Installation, **I-116**
Memory (MEM) Card Installation, **I-42**
Mounting the Basic System Cabinet Bracket, **I-37**
Mounting the Basic System Equipment Cabinet, **I-37**
Mounting the Basic System Power Supply, **I-37**
Mounting the Expanded System Cabinet Bracket, **I-37**
Mounting the Expanded System Equipment Cabinet, **I-37**
Mounting the Expanded System Power Supply, **I-37**
Mount the Mounting Bracket, **I-26**
Music-On-Hold Installation, **I-93**
Music Source RVAC Card, **I-93**

N

Night Bell Installation, **I-92**

O

Optional Voice Features Installation, **I-92**
Overview of the Switching System, **I-14**

P

Package A Features, **I-19**
Package B Features, **I-19**
Package C Features, **I-20**
Package D Features, **I-20**
Personal Computer Overview, **I-114**
Personal Computer Hardware Requirements, **I-114**
Personal Computer Installation, **I-109**
PMP Operational Overview, **I-137**
PMP (Portable Maintenance Panel) Overview, **I-107**
Portable Maintenance Panel Installation, **I-109**
Portable Maintenance Panel Installation with Optional Diskette Drive, **I-109**
Portable Maintenance Panel Operating Basics, **I-112**
Post-Installation Procedures, **I-153**
Power Cabling the Expanded System, **I-37**
Power Failure Transfer Card Installation, **I-65**
Power Requirements, **I-22**
Powering Up the System, **I-117**
Pre-Installation Information, **I-22**
Printer, Cable, and DIU/DTA Port Characteristic, **I-163**
Printer, Cable, and System Communications Port Characteristics, **I-155**
Printer Cable Requirements, **I-155**
Printer Power ON/OFF Options, **I-158**
Printer XON/XOFF Option, **I-158, I-166**

R

Recorded Voice Announcement Card (RVAC) Option Installation, **I-64**
Reference Documents, **I-14**
Remote PMP Operation, **I-139**
Required Tools For Installation, **I-24**
Ringing Generator (RGEN) Card Installation, **I-63**

S

Save ODDB Using PMP Floppy Diskette Option, **I-130**
Save PMP Operating Program to Tape, **I-129**
Saving the ODDB Using the PC, **I-140**
Serial Communications Ports, **I-107**
Shipping of System Components, **I-20**
8SLC (Single Line Telephone) Card Application, **I-74**
SMDR Operation, **I-158**
SMDR Message Format, **I-158**
SMDR (Station Message Detail Recorder) Option, **I-155**
SMDR Option Installation, **I-155**
SMDR Printer Installation, **I-156**
Specification of Line Cards, **I-49**
Specification of Service Function Cards, **I-50**
Specification of Trunk Cards, **I-48**
Supportable Printer Characteristics, **I-163**
Switch Control Basic (SWB) Card Installation, **I-44**
Switch Control (SWC) Card Installation, **I-42**
Switch Control Expanded (SWE) Card Installation, **I-44**
System Cabling and Cross-Connect Wiring Overview, **I-56**
System 4CHT Card Installation, **I-103**
System Communications Port Characteristics, **I-155**
System Communications Port Configuration, **I-157**
System Configuration of Hotel/Motel Printer Characteristics, **I-166**
System Control Component Installation, **I-105**
System Controls, Alarms, and Indicator, **I-121**
System CPM Software Initialization, **I-127**
System CPM/Software Initialization Overview, **I-125**
System Features and Connection Verification, **I-151**
System Hardware and Data Base Initialization, **I-117**
System Hardware Initialization, **I-117**
System Memory Backup, **I-117**
System Software Initialization and ODDB Load, **I-125**

System Verification of Incoming Trunks, **I-152**
System Verification of Options, **I-153**
System Verification of Outgoing Trunks, **I-152**
System Verification Tests, **I-151**
System Verification and Validation, **I-147**

T

Trunk (Central Office) Side Voice Application Installation, **I-83**
Typical Peripheral Installation Wiring, **I-56**

U

Unseating/Removing Cards, **I-39**
Using the MCT (Master Control Telephone) for System Changes, **I-140**
Using the PC to Load/Save the ODDB, **I-140**
Using This Document, **I-13**

V

Voice Application Peripheral Installation, **I-63**
Voice Service Function Card Installation, **I-63**